WebSphere software

IBM

CICS Performance Analyzer

- Gain insight to the IBM WebSphere MQ reporting capabilities
- Explore enhanced CICS Monitoring Facility (CMF) resource class reporting
- Learn how to work with historical performance data

Chris Rayns
Shirley Collins
Eugene Deborin
Peter Klein
Greg Todaro
Mark Todd
Norbert Verbestel

Redbooks

ibm.com/redbooks

International Technical Support Organization

CICS Performance Analyzer

September 2003

SG24-6063-00

Note: Before using this information and the product it supports, read the information in “Notices” on page xi.

First Edition (September 2003)

This edition applies to Version 1 Release 3 of IBM CICS Performance Analyzer for z/OS (product number 5655-F38), Version 1 Release 3 of CICS Transaction Server (product number 5655-147), and Version 2 Release 2 of CICS Transaction Server (product number 5697-E93).

Contents

Notices

This information was developed for products and services offered in the U.S.A.

IBM may not offer the products, services, or features discussed in this document in other countries. Consult your local IBM representative for information on the products and services currently available in your area. Any reference to an IBM product, program, or service is not intended to state or imply that only that IBM product, program, or service may be used. Any functionally equivalent product, program, or service that does not infringe any IBM intellectual property right may be used instead. However, it is the user's responsibility to evaluate and verify the operation of any non-IBM product, program, or service.

IBM may have patents or pending patent applications covering subject matter described in this document. The furnishing of this document does not give you any license to these patents. You can send license inquiries, in writing, to:
IBM Director of Licensing, IBM Corporation, North Castle Drive, Armonk, NY 10504-1785 U.S.A.

The following paragraph does not apply to the United Kingdom or any other country where such provisions are inconsistent with local law: INTERNATIONAL BUSINESS MACHINES CORPORATION PROVIDES THIS PUBLICATION "AS IS" WITHOUT WARRANTY OF ANY KIND, EITHER EXPRESS OR IMPLIED, INCLUDING, BUT NOT LIMITED TO, THE IMPLIED WARRANTIES OF NON-INFRINGEMENT, MERCHANTABILITY OR FITNESS FOR A PARTICULAR PURPOSE. Some states do not allow disclaimer of express or implied warranties in certain transactions, therefore, this statement may not apply to you.

This information could include technical inaccuracies or typographical errors. Changes are periodically made to the information herein; these changes will be incorporated in new editions of the publication. IBM may make improvements and/or changes in the product(s) and/or the program(s) described in this publication at any time without notice.

Any references in this information to non-IBM Web sites are provided for convenience only and do not in any manner serve as an endorsement of those Web sites. The materials at those Web sites are not part of the materials for this IBM product and use of those Web sites is at your own risk.

IBM may use or distribute any of the information you supply in any way it believes appropriate without incurring any obligation to you.

Information concerning non-IBM products was obtained from the suppliers of those products, their published announcements or other publicly available sources. IBM has not tested those products and cannot confirm the accuracy of performance, compatibility or any other claims related to non-IBM products. Questions on the capabilities of non-IBM products should be addressed to the suppliers of those products.

This information contains examples of data and reports used in daily business operations. To illustrate them as completely as possible, the examples include the names of individuals, companies, brands, and products. All of these names are fictitious and any similarity to the names and addresses used by an actual business enterprise is entirely coincidental.

COPYRIGHT LICENSE:

This information contains sample application programs in source language, which illustrate programming techniques on various operating platforms. You may copy, modify, and distribute these sample programs in any form without payment to IBM, for the purposes of developing, using, marketing or distributing application programs conforming to the application programming interface for the operating platform for which the sample programs are written. These examples have not been thoroughly tested under all conditions. IBM, therefore, cannot guarantee or imply reliability, serviceability, or function of these programs.

Trademarks

IBM, the IBM logo, and ibm.com are trademarks or registered trademarks of International Business Machines Corporation in the United States, other countries, or both. These and other IBM trademarked terms are marked on their first occurrence in this information with the appropriate symbol (® or ™), indicating US registered or common law trademarks owned by IBM at the time this information was published. Such trademarks may also be registered or common law trademarks in other countries. A current list of IBM trademarks is available on the Web at http://www.ibm.com/legal/copytrade.shtml

The following terms are trademarks of the International Business Machines Corporation in the United States, other countries, or both:

1-2-3®
AIX®
AnyNet®
CICSPlex®
CICS®
DB2®
IBM®
IMS™
iSeries®
Language Environment®
Lotus®
MQSeries®
MVS™
OS/390®
Parallel Sysplex®
RACF®
Redbooks®
Redpaper™
Redbooks (logo) ®
Resource Measurement Facility™
RMF™
S/390®
Tivoli®
VTAM®
WebSphere®
z/OS®
zSeries®

The following terms are trademarks of other companies:

Java, and all Java-based trademarks are trademarks of Sun Microsystems, Inc. in the United States, other countries, or both.

Microsoft, Windows NT, Windows, and the Windows logo are trademarks of Microsoft Corporation in the United States, other countries, or both.

Linux is a trademark of Linus Torvalds in the United States, other countries, or both.

Other company, product, or service names may be trademarks or service marks of others.

Preface

This IBM® Redbooks® publication targets CICS® Transaction Server V1.3 and V2.2 customers who plan to implement IBM CICS Performance Analyzer. With this tool, you can produce a wide range of reports and extracts to help you tune and manage CICS systems.

The first part of this book begins with an overview of CICS-provided tools and utilities that help you gather and analyze performance data. Then it introduces the CICS Performance Analyzer product and its various report generating options. It also shows you how to import the extracted performance data into spreadsheets for further analysis.

The second part of this book takes you through a series of scenarios that cover major CICS components and interfaces. These include CICS-VSAM interface, CICS-DB2 Attachment Facility, CICS use of the MVS™ System Logger, Java™ applications in CICS, and others. For each scenario, you see how you can extract the relevant performance data using CICS Performance Analyzer. You can then use this data to improve the overall system performance or to compare different execution options at run time.

This Redbooks publication explores the new functionality of CICS PA Release 1.3, including IBM WebSphere® MQ and how CICS PA now handles System Management Facility (SMF) 116 records. It looks at the new CICS Monitoring Facility (CMF) reports such as the Wait Analysis and Temporary Storage Usage reports. It aslo explains the Historical Database (HDB) facility for maintaining a history of CMF performance data for longer term reporting or exporting to DB2®.

Note: This book is based on the Redbooks publication *IBM Tools: CICS Performance Analyzer V1.2*, SG24-6882.

The team who wrote this book

This Redbooks publication was produced by a team of specialists from around the world working at the International Technical Support Organization (ITSO), Poughkeepsie Center.

Chris Rayns is an IT Specialist and project leader at the ITSO, Poughkeepsie Center in New York. Specializing in security, Chris writes extensively on all areas of S/390® security. Before joining the ITSO, he worked in IBM Global Services in the United Kingdom (UK) as a CICS IT Specialist.

Shirley Collins is a Technical Writer with Fundi Software in Perth, Western Australia. She is a member of the development team for CICS Performance Analyzer, IMS™ Performance Analyzer, and IMS Problem Investigator. Prior to this position, she was with IBM Australia after starting out as a programmer/analyst on financial systems. She holds degrees in mathematics and education.

Eugene Deborin is a Consulting Information Technology Specialist at the ITSO, Poughkeepsie Center. He writes extensively and teaches IBM classes worldwide about all areas of transaction and message processing. Eugene has been working for IBM Israel since 1984, first as a systems engineer and, more recently, as a software technical sales specialist. He joined the ITSO San Jose Center in 1997 as a CICS Transaction Server Specialist and is now a CICS and WebSphere MQ project leader at the ITSO, Raleigh Center in North Carolina.

Peter Klein is a CICS Team Leader at the IBM Germany Customer Support Center. He has 18 years of experience working as a technical support specialist with IBM software products. His expertise includes WebSphere MQ, CICSPlex® System Manager, and distributed transaction systems. Peter has contributed to several other Redbooks publications and ITSO projects sponsored by IBM Learning Services.

Greg Todaro is an IBM Software Engineer with the CICS/390 Level 2 support group in Raleigh, North Carolina. Greg began working with CICS in 1985 as a programmer/analyst. Then, he moved quickly into MVS and CICS systems programming for the insurance, banking, and manufacturing sectors. He has been with IBM since 1998.

Mark Todd is a Software Engineer from IBM Hursley, England. He has been on the CICS/390 Change Team, and with IBM, for five years. He also has 13 years of experience in working as a systems programmer, for IBM software products, in the manufacturing and financial sectors.

Norbert Verbestel is an Information Technology Specialist at the IBM Belgium Support Center. His areas of responsibility include second-level support, customer service, and education. He has been with IBM for 28 years, spending 21 of those years working with the CICS product. His other areas of expertise are DB2 and CICSPlex System Manager. Norbert has contributed to several other Redbooks publications and ITSO projects sponsored by IBM Learning Services.

Thanks to the following people for their contributions to this project:

Jim Grauel
IBM US, CICS Level 2 Support

Paola Bari
Richard Conway
Robert Haimowitz
IBM ITSO, Poughkeepsie Center

Bart Steegmans
IBM ITSO, San Jose Center

Chris Baker
Phil Wakelin
IBM UK, Hursley Laboratories

John Hancy
Fundi Software, Australia

Become a published author

Join us for a two- to six-week residency program! Help write an IBM Redbook dealing with specific products or solutions while getting hands-on experience with leading-edge technologies. You'll team with IBM technical professionals, Business Partners and/or customers.

Your efforts will help increase product acceptance and customer satisfaction. As a bonus, you'll develop a network of contacts in IBM development labs, and increase your productivity and marketability.

Find out more about the residency program, browse the residency index, and apply online at:

ibm.com/redbooks/residencies.html

Comments welcome

Your comments are important to us!

We want our Redbooks to be as helpful as possible. Send us your comments about this or other Redbooks in one of the following ways:

- Use the online **Contact us** review Redbooks form found at:

  `ibm.com/redbooks`

- Send your comments in an email to:

  `redbook@us.ibm.com`

- Mail your comments to:

  IBM Corporation, International Technical Support Organization
  Dept. HYJ Mail Station P099
  2455 South Road
  Poughkeepsie, NY 12601-5400

Part 1

CICS Performance Analyzer overview

Part 1 offers a theoretical look at CICS Performance Analyzer. It introduces the CICS Performance Analyzer product, a component of the IBM CICS Tools family. It explains how CICS reports performance information. Then it takes you through the main CICS Performance Analyzer menus and options. This part presents an overview of performance reports and extracts that CICS Performance Analyzer can generate. It also shows how you can process extracts using a variety of tools.

Part 2 presents a practical look at CICS Performance Analyzer. It takes you through actual scenarios. It shows you how to run CICS Performance Analyzer reports and extracts to analyze system performance. Part 2 also discusses the CICS Performance Analyzer Historical Database (HDB).

1

CICS performance management

This chapter discusses the basics of CICS performance monitoring and tuning methodology. It introduces two complementary CICS performance tools to help you analyze and improve the performance of your CICS systems:

- CICS Performance Analyzer (CICS PA)
- CICS Performance Monitor (CICS PM)

It also mentions the following CICS tools:

- CICS Online Transmission Time Optimizer
- CICS Interdependency Analyzer
- CICS Business Event Publisher for MQSeries®
- IBM Session Manager for z/OS®
- CICS VSAM Recovery

This chapter describes the tools that CICS itself provides to help you gather data that serves as input to CICS Performance Analyzer. Plus it describes CICS statistics processing and monitoring utilities that you may find useful to use in conjunction with CICS Performance Analyzer.

1.1 How to approach CICS performance monitoring and tuning

CICS performance management is the process of continuously monitoring, analyzing, and improving the behavior of your system so that you meet the service levels that you are committed to. Good performance is the achievement of the agreed service levels. It means that system throughput, system availability, and response times meet user's expectations using resources within the budget.

There are several basic steps in tuning a system, some of which may be iterative:

1. Set up performance objectives.

   Performance objectives often consist of a list of transactions and expected response times for each. Ideally, through them, good performance can be easily recognized. Therefore, they must be:

   – Practically measurable
   – Based on a realistic workload
   – Within the budget

   The performance objectives must be agreed upon and regularly reviewed with the users.

2. Decide on measurement criteria.

   Performance objectives may be defined in such terms as:

   – Desired or acceptable response times, such within which 80% of all responses occur
   – Average or peak number of transactions through the system
   – System availability, including mean time to failure and downtime after failure

3. Gather the performance data of your production system.

   CICS provides a variety of tools that help you gather performance data for online monitoring or statistical analysis.

4. Analyze this performance data.

   Use the online performance monitoring and the offline performance reporting tools and apply the methodology described in Part 3 of *CICS Transaction Server for z/OS CICS Performance Guide,* SC34-6009.

5. Adjust the system as necessary.

6. Continue to monitor the performance of the system and anticipate future constraints.

1.2 CICS tools

In recent years, in response to customer requirements, IBM has developed an extensive portfolio of tools for use by customers running CICS Transaction Server on OS/390® or z/OS. Currently, the CICS tools portfolio includes:

- CICS Performance Analyzer
- CICS Performance Monitor
- CICS Online Transmission Time Optimizer
- CICS Interdependency Analyzer
- CICS Business Event Publisher for MQSeries
- IBM Session Manager for z/OS
- CICS VSAM Recovery

These tools complement the comprehensive range of IBM @server zSeries® tools:

- Data Management Tools (for example, IBM DB2 Performance Monitor for OS/390, IBM DB2 SQL Performance Analyzer for OS/390)
- Application Development Tools (for example, IBM Fault Analyzer for z/OS and OS/390, IBM File Manager for z/OS and OS/390, Debug Tool for z/OS and OS/390)
- System Management and other tools (for example, CICS VSAM Recovery)

Together with these other tools from IBM, CICS tools provide customers with an opportunity to significantly reduce the total cost of ownership of their z/OS and OS/390 systems.

1.2.1 CICS Performance Analyzer

CICS PA is a reporting tool that provides information about the performance of your CICS systems and applications. It helps you tune, manage, and plan your CICS systems in an efficient way.

CICS PA provides a Historical Database (HDB) facility to help you manage the performance data for your CICS transactions.

CICS PA provides reports and extracts using the data that is normally collected by your system in system management facility (SMF) data sets:

- CICS Monitoring Facility (CMF) performance, exception, and transaction resource class records (type 110)
- DB2 accounting records (type 101)
- WebSphere MQ accounting records (type 116)
- System Logger records (type 88)

CICS PA is designed to complement the CICS-supplied utilities and sample programs, such as DFH$MOLS, DFHSTUP, and DFH0STAT.

CICS PA can help:

- System programmers to track overall CICS performance and evaluate the results of their system tuning efforts
- Application programmers to analyze the performance of their applications and the resources they use
- Database administrators to analyze the usage and performance of database systems such as IMS and DB2
- MQ administrators to analyze the usage and performance of their WebSphere MQ messaging systems
- Managers to ensure that their service-level agreement objectives are met and measure trends to help plan future requirements

CICS PA reports all aspects of CICS system activity and resource usage, including:

- Transaction response time and resource usage
- CICS system resource usage
- Cross-system performance, including multiregion operation (MRO) and advanced program-to-program communication (APPC)
- Business Transaction Services (BTS)
- CICS Web Support (CWS)

- External subsystems, including DB2, IMS, and WebSphere MQ
- System Logger performance
- Exception events that cause performance degradation

CICS PA provides both an ISPF screen and a command interface. You can use either to request your reports and extracts.

1.2.2 CICS Performance Monitor

CICS PM is an online monitoring tool that provides real-time performance management, monitoring, and troubleshooting solutions for CICS Transaction Server (TS). It allows you to detect performance problems early, identify the cause, and change system and resource parameters to avoid problems. CICS PM uses the CICSPlex System Manager (SM) Web User Interface (WUI) server component of CICS TS.

CICS PM complements CICS PA for online analysis. The product is based on a standard application programming interface (API). It is built on facilities of CICSPlex SM, which is an integral part of CICS TS. The underlying CICSPlex SM infrastructure is transparent to the CICS PM user, so little knowledge of CICSPlex SM is necessary to operate CICS PM.

CICS PM consists of two components:

- **CICS PM workstation client**: You download this component to a Windows® workstation. It provides a graphical user interface (GUI) that displays data provided by a supporting application of CICS PM installed in CICS TS. The client GUI consists of three components:
  - *Threshold definitional component*: Allows the user to create and maintain threshold definitions.
  - *Monitoring component*: Provides the ability to monitor the status of multiple CICS regions. When a threshold is triggered, an event is created. Information about multiple events is aggregated into an event view for rapid problem identification. Navigation to the CICS PM view sets facilitates problem resolution by providing more detailed information.
  - *History definitional and reporting component*: Allows the user to create and maintain history definitions for completed task history. The status of installed history definitions can also be monitored. The reporting component launches Web-based views of completed task history data.
- **CICS PM server**: This component provides a comprehensive series of view sets specifically tailored for performance analysis and problem determination. These view sets provide real-time access to all CICS systems and resource-related performance data. They also provide access to all the task-level performance data collected by the CMF.

  The CICS system-level view sets include:

  - CICS region
  - CICS storage (dynamic storage area (DSA) and subpool usage)
  - Transaction manager
  - CICS dispatcher
  - Loader
  - Temporary storage
  - Transient data
  - DB2 connection
  - Recovery manager, including unit of work (UOW) analysis
  - Enqueue pools

- JVM pool
- Global and task-related user exits

The view sets provide access to all resources defined to the CICS systems, including:

- Transactions
- Transaction classes
- Programs
- Files, data tables, and local shared resource (LSR) pools
- Connections
- Log streams
- Journals
- Temporary storage queues
- Transient data queues
- Terminals
- DB2 entries
- System and transaction dumps
- Enterprise Java resources

Other view sets are provided, giving access to the performance information about all the active and optionally recently completed tasks in the CICS systems.

1.2.3 Benefits of CICS Performance Analyzer and CICS Performance Monitor

This section summarizes the benefits provided by both CICS performance tools.

The benefits provided by CICS PA are:

- Ease of use (no additional setup or customization required)
- Easily customizable performance reports
- Detailed and summary reports on all aspects of CICS system activity and resource usage
- Extracts for graphing and analysis by external programs, such as DB2 or PC tools (for example, Lotus® 1-2-3®)
- Historical Database repository for CMF performance class data
- CICS PA can help to:
  - Analyze CICS application performance
  - Improve CICS resource usage
  - Evaluate the effects of CICS system tuning efforts
  - Improve transaction response time
  - Provide ongoing system management and measurement reports
  - Increase availability of resources
  - Increase the productivity of system and application programmers
  - Provide awareness of usage trends, assisting with future growth estimates

The benefits provided by CICS PM are:

- Improved CICS systems availability
- Reduced system management costs
- Ability to detect performance problems early
- Enablement of changes to key system and resource parameters
- Enablement of online interactive access to performance data of recently completed tasks
- Easy-to-use comprehensive interface for exception management
- Built on standard APIs and proven CICS TS system management technologies
- Ease of installation and setup

The two products, CICS PA and CICS PM, complement each other. Table 1-1 provides a functional comparison between the two products.

Table 1-1 CICS PA and CICS PM comparison

Function	CICS PA	CICS PM
Invocation	Offline	Online
Mode	Passive	Active
Input origin/output destination	3270/reports	Windows workstation
Output format	Tabular, graphical, extracts	GUI
Information source	SMF	CICSPlex SM
History	As far back as you keep SMF data, or maintained in CICS PA HDB	Recent
Deals with	Exceptions, performance, transaction resource usage history	Alerts
Additional usage	Capacity planning	Status monitoring

1.2.4 CICS Online Transmission Time Optimizer

CICS Online Transmission Time Optimizer for z/OS (CICS OTTO) is a run-time tool that optimizes:

- Data streams directed to 3270-type display stations, printers, or both
- Data streams directed to SCS-type printers
- Data streams directed to banking terminals 3600/4700

The supported CICS releases are:

- CICS Transaction Server for z/OS, Version 2.1 and 2.2
- CICS Transaction Server for OS/390, Version 1

1.2.5 CICS Interdependency Analyzer

CICS Interdependency Analyzer for z/OS and OS/390 (CICS IA) is a run-time tool that:

- Analyzes resource interdependencies
  - What a CICS region has in it
  - What resources a transaction needs to run
  - Which programs use which resources
  - What resources are no longer used
- Writes report data to a DB2 database

The supported CICS releases are:

- CICS Transaction Server for z/OS, Version 2.1 and 2.2
- CICS Transaction Server for OS/390, Version 1

1.2.6 CICS Business Event Publisher for MQSeries

CICS Business Event Publisher for MQSeries (CBEP) enables a rapid extension of existing applications running in CICS Transaction Server V1.3 or CICS Transaction Server V2.2. CBEP generates user-defined MQSeries messages as a side effect when certain EXEC CICS commands are executed by a CICS application. Message generation is transparent to

the application program. CICS Business Event Publisher for MQSeries supports the following functions:

- Enables customizable MQSeries messages and queues based on rules
- Provides real-time data propagation
- Offers external logging or notification of CICS-related activity
- Enables non-CICS functions to act as write-only data repositories

1.2.7 IBM Session Manager for z/OS

IBM Session Manager for z/OS provides IBM Virtual Telecommunications Access Method (VTAM®) and Transmission Control Protocol/Internet Protocol (TCP/IP) users a secure and user-friendly way to access multiple IBM OS/390 and IBM z/OS systems from a single 3270 terminal. With a highly secure, single sign-on capability, users can access all your business applications from multiple concurrent, virtual sessions. Session Manager supports the following functions:

- Enables a common user interface for all TCP/IP and VTAM applications
- Eliminates redundant and time-consuming logon and logoff activities and application switching
- Uses a single network connection to establish multiple concurrent sessions
- Allows you to easily and efficiently manage multiple sessions and different types of user groups

Session Manager for z/OS can help you:

- Reduce training costs

  Point-and-click ease means users don't have to learn an entirely new skill set.
- Enhance system usage
- Increase security
- Reduce the cost and effort associated with network administration
- Provide access to mainframe applications from distributed or workstation programs

1.2.8 CICS VSAM Recovery

CICS VSAM Recovery (CICSVR) recovers lost or damaged Virtual Storage Access Method (VSAM) data. CICSVR is for organizations where the availability and integrity of VSAM data is vital. CICSVR provides:

- A screen interface to help assess the situation and initiate forward recovery.
- Automatic backups and log streams and log stream copies required for recovery.
- Forward recovery to recover lost or damaged VSAM data sets.
- Multiple data set recovery in a single run.
- An ISPF screen interface that complies with Common User Access (CUA)

  The interface can be used to direct CICSVR to create and submit a job to restore VSAM data sets from a logical backup and perform a forward recovery.
- Automatic restore of VSAM data sets from logical backups created by DFSMShsm and DFSMSdss.
- Support of backup-while-open (BWO) data sets

  This enables you to create BWO backups when a data set is open and being updated by CICS. CICSVR can restore and recover VSAM data sets from backups created by the BWO facility.

1.3 Data used by CICS Performance Analyzer

This section discusses the types of SMF data that CICS Performance Analyzer can process.

1.3.1 CICS Monitoring Facility data (SMF 110 records)

CICS monitoring collects data about the performance of all user- and CICS-supplied transactions during online processing for later offline analysis. The records produced by CICS monitoring are MVS System Management Facility (SMF) type 110 records. They are written to an SMF data set.

The CMF enables you to collect the following types or classes of monitoring data:

- Performance class data
- Exception class data
- Transaction resource class data

Controlling CICS monitoring

When you start CICS, you switch on the monitoring facility by specifying the system initialization parameter MN=ON. MN=OFF is the default setting. You can select the classes of monitoring data that you want to be collected using the MNPER, MNEXC, and MNRES system initialization parameters. You can request the collection of any combination of performance class data, exception class data, and transaction resource class data. You can change the class settings whether the monitoring facility is ON or OFF. For details about all the system initialization parameters that control monitoring activities, see the *CICS Transaction Server for z/OS CICS System Definition Guide*, SC34-5988.

When CICS is running, you can control the monitoring facility dynamically. As with CICS initialization, you can switch monitoring on or off. You can also change the classes of monitoring data that are being collected. There are two ways to do this:

- Use the master terminal CEMT INQ|SET MONITOR command, which is described in *CICS Transaction Server for z/OS CICS Supplied Transactions*, SC34-5992.
- Use the EXEC CICS INQUIRE MONITOR and SET MONITOR commands (see the *CICS Transaction Server for z/OS CICS System Programming Reference*, SC34-5995).

If you activate a class of monitoring data in the middle of a run, the data for that class becomes available only for transactions that are started thereafter. You cannot change the classes of monitoring data that is collected for a transaction after it has started. It is often preferable, particularly for long-running transactions, to start all classes of monitoring data at CICS initialization.

How CICS monitoring data is passed to SMF

The various CICS monitoring class records are not written to SMF in the same way as explained here.

Performance data records are written to a performance record buffer, which is defined and controlled by CICS as the records are produced. The performance records are passed to SMF for processing:

- When the buffer is full
- When the performance class of monitoring is switched off
- When CICS itself quiesces

When monitoring itself is deactivated or when there is an immediate shutdown of CICS, the performance records are not written to SMF and the data is lost.

Exception records are passed directly to SMF when the exception condition completes. Each exception record describes one exception condition. Performance and exception records can be matched by transaction number (TRANNUM) or network unit-of-work ID (NETUOWPX and NETUOWSX).

Transaction resource data records are written to a transaction resource record buffer, which is defined and controlled by CICS, as the records are produced. The transaction resource records are passed to SMF for processing:

- When the buffer is full
- When the transaction resource class of monitoring is switched off
- When CICS itself becomes quiescent

When monitoring itself is deactivated or when there is an immediate shutdown of CICS, the transaction resource records are not written to SMF and the data is lost.

Performance class data

Performance class data is detailed transaction-level information, such as the processor and elapsed time for a transaction, or the time spent waiting for input/output (I/O). At least one performance record is written for each transaction that is being monitored.

Performance class data provides detailed, resource-level data that can be used for accounting, performance analysis, and capacity planning. This data contains information relating to individual task resource usage. It is completed for each task when the task terminates.

You can enable performance class monitoring by coding MNPER=ON (together with MN=ON) as a system initialization parameter. Alternatively, you can use one of the following two commands to enable performance class monitoring dynamically:

```
CEMT SET MONITOR ON PERF
EXEC CICS SET MONITOR STATUS(ON) PERFCLASS(PERF)
```

You can use this information periodically to calculate the charges applicable to different tasks. If you want to set up algorithms for charging users for resources used by them, you can use this class of data collection to update the charging information in your organization's accounting programs. For older versions of CICS, charging primarily on exact resource usage was not recommended, because of the overhead involved in obtaining these figures.

Exception class data

Exception class monitoring data is information about CICS resource shortages suffered by a transaction. This data highlights possible problems in CICS system operation. It is intended to help you identify system constraints that affect the performance of your transactions. There is one exception record for each type of exception condition. The exception records are produced and written to SMF as soon as the resource shortage encountered by the transaction is resolved. Exception records are produced for each of the following resource shortages:

- Wait for storage in the CDSA
- Wait for storage in the UDSA
- Wait for storage in the SDSA
- Wait for storage in the RDSA
- Wait for storage in the ECDSA
- Wait for storage in the EUDSA
- Wait for storage in the ESDSA
- Wait for storage in the ERDSA
- Wait for auxiliary temporary storage

- Wait for auxiliary temporary storage string
- Wait for auxiliary temporary storage buffer
- Wait for coupling facility data tables locking (request) slot
- Wait for coupling facility data tables non-locking (request) slot
- Wait for file buffer
- Wait for LSRPOOL string
- Wait for file string

If the monitoring performance class is also recorded, the performance class record for the transaction includes the total elapsed time that the transaction was delayed by a CICS system resource shortage. This is measured by the exception class and the number of exceptions encountered by the transaction. The exception class records can be linked to the performance class records either by the transaction sequence number or by the network unit-of-work ID.

You can enable exception class monitoring by specifying the MNEXC=ON (together with MN=ON) system initialization parameter. Alternatively, you can use one of the following two commands to enable exception class monitoring dynamically:

```
CEMT SET MONITOR ON EXCEPT
EXEC CICS SET MONITOR STATUS(ON) EXCEPTCLASS(EXCEPT)
```

Transaction resource class data

Transaction resource class data is a new CICS TS monitoring feature introduced by authorized program analysis report (APAR). Ensure that you apply the relevant program temporary fixes (PTFs) in Table 2-1 on page 26.

Transaction resource class data provides additional transaction-level information about individual resources accessed by a transaction. Currently, the transaction resource class covers file and temporary storage resources only. The maximum number of files and temporary storage queues monitored for each transaction is limited by the FILE and TSQUEUE parameters on the DFHMCT TYPE=INITIAL macro. The default is FILE=8 for files and TSQUEUE=4 for temporary storage queues. Therefore, you may need to assemble an monitoring control table (MCT) that specifies the FILE option, TSQUEUE option, or both options if the default values are insufficient, or if you do not want to collect transaction resource data for either files or temporary storage queues. One transaction resource record is written for each transaction that is being monitored. This happens provided that the transaction accesses at least one of the resources for which monitoring data is requested.

Performance class data also provides information about file and temporary storage queue accesses. However, this information in the performance record is given in total only for all files and all temporary storage queues. Transaction resource class data breaks down this information by individual file name and temporary storage queue name, up to the maximum number specified in the MCT. Transaction resource information is completed for each task when the task terminates.

You enable transaction resource class monitoring at startup by coding MNRES=ON (together with MN=ON) as a system initialization parameter. Alternatively, you can use one of the following two commands to enable transaction resource class monitoring dynamically:

```
CEMT SET MONITOR ON RESRCE
EXEC CICS SET MONITOR STATUS(ON) RESRCECLASS(RESRCE)
```

Event monitoring points

CICS monitoring data is collected at system-defined event monitoring points (EMPs) in the CICS code. Although you cannot relocate these monitoring points, you can choose which

classes of monitoring data you want to collect. For programming information about CICS monitoring, see *CICS Transaction Server for z/OS CICS Customization Guide*, SC34-5989.

If you want to gather more performance class data than is provided at the system-defined EMPs, you can code additional EMPs in your application programs. At these points, you can add or change up to 16384 bytes of user data in each performance record. Within this limit you can have, for each ENTRYNAME qualifier, any combination of:

- Between 0 and 256 counters
- Between 0 and 256 clocks
- A single 8192-byte character string

You can use these additional EMPs to count the number of times a certain event occurs, or to time the interval between two events. If the performance class was active when a transaction was started, but was not active when a user EMP was issued, the operations defined in that user EMP still execute on that transaction's monitoring area. The DELIVER option results in a loss of data at this point, because the generated performance record cannot be output while the performance class is not active. If the performance class is not active when a transaction was started, the user EMP has no effect.

User EMPs are used in combination with the EXEC CICS MONITOR command. This command activates and deactivates them. For programming information about this command, refer to the *CICS Transaction Server for z/OS CICS Application Programming Reference*, SC34-5994.

Additional EMPs are provided in some IBM program products, such as database control (DBCTL). From the CICS point of view, these are like any other user-defined EMP. EMPs in user applications and in IBM program products are identified by a decimal number. The numbers 1 through 199 are available for EMPs in user applications. The numbers from 200 through 255 are for use in IBM program products. The numbers can be qualified with an *entry name*, so that you can use each number more than once. For example, PROGA.1, PROGB.1, and PROGC.1 identify three different EMPs because they have different entry names.

For each user-defined EMP, there must be a corresponding MCT entry, which has the same identification number and entry name as the EMP that it describes. You do not have to assign entry names and numbers to system-defined EMPs. Nor do you have to code MCT entries for them.

Here are some ideas for using the CICS and user fields provided with the CICS Monitoring Facility:

- If you want to time how long it takes to perform a table lookup routine within an application, code an EMP with, for instance ID=50, just before the table lookup routine and an EMP with ID=51 just after the routine. The system programmer codes a TYPE=EMP operand in the MCT for ID=50 to start user clock 1. You also code a TYPE=EMP operand for ID=51 to stop user clock 1. The application executes. When EMP 50 is processed, user clock 1 is started. When EMP 51 is processed, the clock is stopped.
- You can use one user field to accumulate an installation accounting unit. For example, you may count different amounts for different types of transaction. Or, in a browsing application, you may count one unit for each record scanned and not selected, and three for each record selected.

  You can also treat the full word count fields as 32-bit flag fields to indicate special situations, for example, out-of-line situations in the applications, operator errors, and so on. CICS includes facilities to turn individual bits or groups of bits on or off in these counts.
- You can use the performance clocks to accumulate the time taken for I/O, DL/I scheduling, and so on. It usually includes any waiting for the transaction to regain control after the

requested operation has completed. Because the periods are counted as well as added, you can get the average time waiting for I/O as well as the total. If you want to highlight an unusually long individual case, set a flag on in a user count as explained earlier.

- A use of the performance character string is for systems in which one transaction ID is used for widely differing functions. The application can enter a subsidiary ID into the string to indicate which particular variant of the transaction applies in each case. This use of user EMPs is now catered for by the Application Naming function.

Some users have a single transaction ID so that all user input is routed through a common prologue program for security checking, for example. In this case, it is easy to record the subtransaction identifier during this prologue. However, it is equally possible to route transactions with different identifiers to the same program, in which case this technique is not necessary.

Monitoring control table

You use the monitoring control table for the following reasons:

- To specify the type of resource for which you want to collect Transaction Resource Monitoring data (DFHMCT TYPE=INITIAL) and the maximum number of files (FILE= option) and temporary storage queues (TSQUEUE= option) for Transaction Resource Monitoring
- To enable Application Naming support, which makes available the CICS-generated DFHAPPL EMPs to your application programs (DFHMCT TYPE=INITIAL)
- To notify CICS about the EMPs that you coded in your application programs and about the data that is to be collected at these points (DFHMCT TYPE=EMP)
- To notify CICS that you do not want certain system-defined performance data to be recorded during a particular CICS run (DFHMCT TYPE=RECORD)

IMS DBCTL users can collect DBCTL statistics in the CMF performance class records by including the DFH$MCTD copy member in the MCT definition.

You can find full details about the MCT in the *CICS Transaction Server for z/OS CICS Resource Definition Guide*, SC34-5990. Examples of MCT coding are included with the programming information in the *CICS Transaction Server for z/OS CICS Customization Guide*, SC34-5989.

Four sample monitoring control tables are also provided in CICSTS22.CICS.SDFHSAMP:

- DFHMCTT$: For terminal-owning regions (TORs)
- DFHMCTA$: For application-owning regions (AORs)
- DFHMCTD$: For application-owning regions (AORs) with DBCTL
- DFHMCTF$: For file-owning regions (FORs)

These samples show how to use the EXCLUDE and INCLUDE operands to reduce the size of the performance class record and reduce the volume of data written by CICS to SMF.

1.3.2 DB2 accounting data (SMF 101 records)

DB2 accounting data is written as SMF type 101 records.

DB2 accounting trace

The DB2 accounting trace provides information related to application programs, including:

- Start and stop times
- Number of commits and aborts

- The number of times certain SQL statements are issued
- Number of buffer pool requests
- Counts of certain locking events
- Processor resources consumed
- Thread wait times for various events
- RID pool processing
- Distributed processing
- Resource limit facility statistics

The DB2 trace begins collecting this data at successful thread allocation to DB2. It writes a completed record when the thread terminates or when the authorization ID changes.

DB2 accounting records are produced when a thread is terminated or sign-on occurs. This means that the period reported in the DB2 accounting record is the time between start or user sign-on (if reusing a thread previously used by another user) and thread termination or another sign-on. You can use the ACCOUNTREC(TXID) parameter in the DB2ENTRY or DB2CONN to cause a DB2 accounting record to be produced when the transaction ID changes, and when the thread terminates or another sign-on occurs.

For thread reuse, this means that many users are included in the same record, which can cause difficulties for both accounting and problem determination. The ACCOUNTREC(TASK) or ACCOUNTREC(UOW) settings in a DB2ENTRY or DB2CONN provide more granularity. This is because a record is produced for each user. It involves the passing of a token between CICS and DB2, which is present in both CICS and DB2 traces.

ACCOUNTREC(TASK) ensures that there is a minimum of one accounting record for each task. There can be more depending on thread reuse.

For more information about accounting and monitoring in a CICS DB2 environment, refer to the *CICS Transaction Server for z/OS CICS DB2 Guide*, SC34-6014. For more information about setting up DB2 accounting, refer to the *DB2 UDB for OS/390 and z/OS Administration Guide*, SC26-9931.

Accounting CLASS 1 processor time

For accounting CLASS 1, a task processor timer is created when the task control block (TCB) is attached. When a thread to DB2 starts, the timer value is saved. When the thread is terminated (or the authorization ID is changed), then the timer is checked again. Both the timer start and end values are recorded in the SMF 101 records (the DB2 accounting record).

Accounting CLASS 2 processor time

For accounting CLASS 2, the timer is checked on every entry and exit from DB2 to record the “IN DB2” time in the SMF type 101 record. In this case, it is the difference that is stored in the record.

1.3.3 WebSphere MQ accounting data (SMF 116 records)

WebSphere MQ accounting data is written as SMF type 116 records.

Accounting class 1 and class 3

WebSphere MQ accounting information can be collected for three subtypes:

0 Message manager accounting records (how much of the central processing unit (CPU) was spent processing WebSphere MQ API calls and the number of MQPUT and MQGET calls)

This information is produced when a named task disconnects from WebSphere MQ. The information contained within the record may cover many hours.

1 Accounting data for each task, at thread and queue level

2 Additional queue-level accounting data (if the task uses more queues than can fit in the subtype 1 record)

Subtype 0 is produced with trace class 1. Subtypes 1 and 2 are produced with trace class 3.

MQ accounting trace

You can start the WebSphere MQ trace facility at any time by issuing the WebSphere MQ START TRACE command.

Accounting data can be lost if the accounting trace is started or stopped while applications are running. To collect accounting data successfully, the following conditions must apply:

- The accounting trace must be active when an application starts. It must still be active when the application finishes.
- If the accounting trace is stopped, any accounting data collection that was active stops.

You can also start collecting some MQ accounting data automatically if you specify YES in the SMFACCT (SMF ACCOUNTING) parameters of the CSQ6SYSP macro.

You cannot use this method to start collecting class 3 accounting information (thread-level and queue-level accounting). You must use the START TRACE command to do this. However, you can include the command in your CSQINP2 input data set so that the trace is started automatically when you start your queue manager.

For more information about setting up WebSphere MQ accounting, refer to the *WebSphere MQ for z/OS System Setup Guide*, SC34-6052.

1.3.4 MVS System Logger data (SMF 88 records)

System Logger produces SMF record type 88 to record the System Logger activity of a single system in a sysplex. These records are written to the active SMF data set on the system.

Capacity planning

For capacity planning purposes, we recommend that you view the steady-state performance requirements of an application. Various flags in the SMF record type 88 highlight exception scenarios for additional analysis or changes in report processing.

Record type 88

Record type 88 focuses on the logstream data for a system in a sysplex, including use of *interim storage*. Interim storage is where log data is initially written, before being written to direct access storage device (DASD) log data sets. You can quickly access data in interim storage without incurring DASD I/O. In a coupling facility log stream, interim storage for log data is in coupling facility list structures. In a DASD-only log stream, interim storage for log data is contained in local storage buffers on the system and duplexed to staging data sets. Using record type 88 can help an installation avoid the STRUCTURE FULL exception, and perform other tuning, capacity planning analysis, or both.

Given a specific log stream, a record type 88 summarizes all of that log stream's activity on that system, as long as at least one address space is connected to the log stream on that system. If no System Logger write activity is performed on the log stream during a particular

SMF interval, a record is produced showing zero for the various System Logger activity total fields.

The System Logger SMF record is cut for all log streams connected at the expiration of the SMF global recording interval. Record type 88 is also triggered by the disconnection of the last log stream on that system.

SMF fields relating to resource events, either structure full or staging data set full conditions, should be handled depending on:

- Whether the resource is shared sysplex-wide and each system will take action
- Whether the resource is shared sysplex-wide but only one system will take action
- Whether the resource is consumed on a system-local basis

To obtain a sysplex-wide view of System Logger activity, correct processing for most SMF 88 data fields is to sum the field contents for the target interval across all the SMF 88 records produced in the sysplex. There are, however, exceptions to this rule. Because each system must take its own action — that is, wait for an ENF signal indicating that System Logger is available — an analysis program should use the maximum value for these fields: SMF88ERI, SMF88ERC, and SMF88ESF. For example, if a structure rebuild is initiated in a sysplex with three systems, the event is recorded on all three systems. The correct number of structure rebuild initiations is not three, but one or the maximum number provided SMF88ERI.

For DASD-only log streams, staging data sets are a required part of the logstream configuration. For coupling facility log streams, use of staging data sets implies a trade-off between performance workload and data integrity. You should try to tune the staging data set size to minimize the number of Staging_Dataset_Threshold_Hit conditions. Without this type of tuning, such conditions can impact performance during staging data set processing. Only an installation can determine what the proper trade-off between performance and data integrity should be.

Because System Logger maintains interim storage differently for coupling facility based log stream versus DASD-only log streams, the difference is reflected in the SMF record 88 report:

- For a coupling facility based log stream, the Structure (Interim Storage) section of the record 88 report shows information about the usage of coupling facility structure space allocated for a log stream and the flow of log data through the structure.
- For a DASD-only log stream, the Structure (Interim Storage) section of the record 88 report shows information about usage of staging dataset space and the flow of data through the staging data set for the log stream.

Not all fields in the Structure (Interim Storage) section of the record 88 report apply to DASD-only log streams. For a DASD-only log stream, fields that do not apply contain zeros. The SMF88STN field contains *DASDONLY* for a DASD-only log stream because there is no structure name.

1.4 Other relevant CICS data and utilities

Other CICS-provided tools can help you gather CICS performance data. They are not required by CICS PA, but they may assist your analysis and decision-making when using CICS PA and interpreting the output.

CICS provides two statistics utilities programs and two programs for processing CICS monitoring data written to SMF. In addition, you can use the DFHJUP utility to copy data from system SMF data sets.

1.4.1 CICS statistics

CICS management modules control how events are managed by CICS. As events occur, CICS produces information that is available to you as system and resource statistics. The resources controlled by CICS include files, databases, journals, transactions, programs, and tasks. Resources that CICS manages, and values that CICS uses in its record-keeping role, are defined in one of the following ways:

- Online by the CICS CEDA transaction
- Offline by the CICS system definition (CSD) utility program DFHCSDUP
- Offline by CICS control table macros

Statistics are collected during CICS online processing for later offline analysis. The statistics domain writes statistics records to an SMF data set. The records are of SMF type 110, sub-type 002. Monitoring records and some journaling records are also written to the SMF data set as type 110 records. For programming information about SMF, DFHCSDUP, and about other SMF data set considerations, see the *CICS Transaction Server for z/OS CICS Customization Guide*, SC34-5989.

Types of statistics data

CICS produces five types of statistics:

- **Interval statistics**: These are gathered by CICS during a specified interval. You can change the interval value using the STATINT system initialization parameter, using CEMT SET STATISTICS, or using the EXEC CICS SET STATISTICS command.
- **End-of-day statistics**: These statistics are gathered on three occasions:
  - At the end-of-day expiry time
  - When CICS becomes quiescent (normal shutdown)
  - When CICS terminates (immediate shutdown)

  The end-of-day value defines a logical point in the 24-hour operation of CICS. You can change the end-of-day value using the STATEOD system initialization parameter, using CEMT SET STATISTICS, or using the EXEC CICS SET STATISTICS command.
- **Requested statistics**: These are statistics that the user requested by using one of the following three commands:

  ```
  CEMT PERFORM STATISTICS RECORD
  EXEC CICS PERFORM STATISTICS RECORD
  EXEC CICS SET STATISTICS ON|OFF RECORDNOW
  ```

  These commands cause the statistics to be written to the SMF data set immediately, instead of waiting for the current interval to expire. For more details about CEMT commands, see *CICS Transaction Server for z/OS CICS Supplied Transactions*, SC34-5992. For programming information about the equivalent EXEC CICS commands, see the *CICS Transaction Server for z/OS CICS System Programming Reference*, SC34-5995.
- **Requested reset statistics**: These statistics differ from requested statistics in that all statistics are collected and statistics counters are reset. You can reset the statistics counters using the CEMT or EXEC CICS PERFORM/SET commands.
- **Unsolicited statistics**: These statistics are automatically gathered by CICS for dynamically allocated and deallocated resources. CICS writes these statistics to SMF just before the resource is deleted regardless of the status of statistics recording.

Processing CICS statistics

You may find it particularly useful to process the statistics records and the monitoring records together. This is because statistics provide resource and system information that is complementary to the transaction data produced by CICS monitoring.

There are several ways to process CICS statistics, including:

- Using the CICS DFHSTUP offline utility: For guidance about retrieving CICS statistics from SMF, and about running DFHSTUP, see the *CICS Transaction Server for z/OS CICS Operations and Utilities Guide*, SC34-5991.
- Writing your own program to report and analyze the statistics: For details about the statistics record types, see the assembler DSECTs named in each set of statistics. For programming information about the formats of CICS statistics SMF records, see the *CICS Transaction Server for z/OS CICS Customization Guide*, SC34-5989.
- Using the sample statistics program (DFH0STAT): You can use the statistics sample program, DFH0STAT, to produce online reports from the CICS statistics data. The program demonstrates the use of the EXEC CICS INQUIRE and EXEC CICS COLLECT STATISTICS commands to produce an analysis of a CICS system. You can use the sample program as provided or modify it to suit your needs.
- Using Tivoli® Decision Support to process CICS SMF records to produce joint reports with data from other SMF records.

1.4.2 The sample statistics program: DFH0STAT

The sample statistics program, DFH0STAT, produces a report that shows comprehensive system information about CICS resources. It also shows an overview of the MVS storage in use. The program demonstrates how you can use EXEC CICS INQUIRE and EXEC CICS COLLECT STATISTICS commands to produce an analysis of your CICS regions. You can use the sample program as supplied, or modify it to suit your needs.

DFH0STAT does *not* report on terminals, DBCTL resources, front-end programming interface (FEPI) resources, dumps, the table manager, and the user domain. If you require statistical information about these areas, you can obtain it using DFHSTUP, the statistics utility program.

Keep in mind that DFH0STAT does not always report to the maximum capacity of certain large statistics fields. If your CICS system is unusually large or very busy, and you have a long statistics interval, check that the statistics values have not overflowed. To avoid this problem, reduce the length of your statistics interval, or use DFHSTUP.

1.4.3 Statistics utility program: DFHSTUP

The statistics utility program, DFHSTUP, prepares and prints reports offline, using the CICS statistics data recorded on the MVS system management facilities (SMF) SYS1.MANx data sets. To enable the CICS statistics domain to record interval statistics on these SMF data sets, you must specify the STATRCD=ON system initialization parameter. The other statistics record types (unsolicited, requested and end-of-day) are written regardless of the setting of the STATRCD option.

For information about the SMF data sets, see the *OS/390 MVS System Management Facilities (SMF),* GC28-1783. For information about what CICS data is recorded on the SMF data sets, and about interpreting CICS statistics output in the DFHSTUP report, see the *CICS Transaction Server for z/OS Performance Guide*, SC34-6009. For a description of the STATRCD system initialization parameter, see the *CICS Transaction Server for z/OS CICS System Definition Guide*, SC34-5988.

Use the version of the DFHSTUP program from the same release of CICS as the data that it is to process.

For more information about DFHSTUP, refer to *CICS Transaction Server for z/OS CICS Operations and Utilities Guide*, SC34-5991.

1.4.4 Monitoring dictionary utility program: DFHMNDUP

DFHMNDUP is a utility program that generates a performance dictionary record, in a sequential data set, for use with monitoring data extracted from SMF data sets. When CICS monitoring is switched on, and you activate the monitoring performance class (MNPER=ON), CICS first writes a performance dictionary record to the current SMF data set. Then it begins to write the monitoring performance data records.

A new dictionary record, which always precedes the monitoring data it relates to, is written whenever you start CICS with the performance class active and CICS monitoring turned on. This record is also written when you change the status of the monitoring performance class from inactive to active, with CICS monitoring turned on. If monitoring is turned off and the monitoring performance class is switched from inactive to active, a dictionary record is scheduled from the next time monitoring is activated.

Any monitoring utility program that processes performance data must read the dictionary record that relates to the data being processed before it attempts to analyze the data. However, if SMF switches data sets during the period when CICS monitoring is writing performance data, CICS does not write a new dictionary record. Therefore a CICS performance dictionary record is not the first monitoring performance record on the new SMF data set. The DFHMNDUP program provides a solution to the problem posed by SMF data sets that do not contain a dictionary record.

The CICS PA System Definitions facility uses DFHMNDUP to create a Dictionary record on request.

1.4.5 Sample monitoring data print program: DFH$MOLS

DFH$MOLS is a print program for CICS monitoring data. It is a sample program that you can modify or adapt to your own purposes. It is intended to show how you can code your own monitoring utility program to print CICS monitoring data.

The job tasks that are involved to process CICS monitoring data are:

1. Unload the SMF data set or sets so that the SMF data is available for processing by a CICS utility. For information about unloading SMF data sets, refer to *OS/390 MVS System Management Facilities (SMF),* GC28-1783.
2. Run the DFH$MOLS program to print monitoring records, which you can optionally select and sort by means of control statements.

The DFH$MOLS program is a data reduction program that is designed to produce reports from the data collected by the CICS monitoring domain (MN), and written to SMF data sets.

The CICS Transaction Server for z/OS, Version 2 Release 2, DFH$MOLS can process SMF 110 monitoring data records for earlier CICS Transaction Server versions and releases. However, DFH$MOLS cannot process monitoring data written by a release of CICS later than itself. Therefore, you should *always* use the DFH$MOLS from the highest version or release available to you.

You run the DFH$MOLS program in a batch region to process any CICS SMF type 110 monitoring records that are present in an unloaded SMF data set. You can write the data set to either a temporary or cataloged data set. You can determine the scope of the report or reports by supplying control statements in the SYSIN data set.

The program reads, formats, and prints the CICS monitoring data, which is packaged in the format:

[SMF HEADER].[SMF PRODUCT SECTION].[CICS DATA SECTION]

The CICS data section in a monitoring record is one of the following types:

- A dictionary data section, consisting of a sequence of dictionary entries
- A performance data section, consisting of a sequence of field connectors followed by one or more performance records (monitoring record type 3)
- An exception data section, consisting of one exception record (monitoring record type 4)
- A transaction resource data section, consisting of one or more Transaction Resource Monitoring records (monitoring record type 5)

For programming information about the structure of CICS SMF type 110, and how the monitoring data is packaged within the SMF records, see the *CICS Transaction Server for z/OS CICS Customization Guide*, SC34-5989. The DFH$MOLS program reads the SMF data and formats and prints it. If you want to analyze the data using your own routines, this is the point at which you can link to a user-written analysis program.

The DFH$MOLS program prints about one page per task. Therefore, be sure to specify only those items that you need using the DFH$MOLS program control statements.

Note that the DFH$MOLS program requires a performance dictionary record to process monitoring performance data. When it locates a dictionary record, it builds an in-store dictionary and processes any subsequent performance data using this dictionary. Whenever it reads a new dictionary record, the current dictionary is released and a new in-store dictionary is built. The dictionary record must appear before any related performance data. Otherwise the DFH$MOLS program abends. Note that monitoring exception records does not require a dictionary, so they can precede the first dictionary record and still be successfully processed.

1.4.6 Journal utility program: DFHJUP

In general, this batch utility is used to read, process, copy, or print CICS log data in MVS System Logger log streams and SMF data sets. CICS can write user journal and autojournal data to SMF data sets rather than to log streams. It is useful to copy and print this data.

1.5 Other relevant information sources

There are several tools for obtaining system performance data relevant to evaluating performance of the CICS system.

1.5.1 System Management Facility

SMF collects and records system and job-related information that you can use in:

- Billing users
- Reporting reliability
- Analyzing your configuration

- Scheduling jobs
- Summarizing DASD activity
- Evaluating data set activity
- Profiling system resource use
- Maintaining system security

CICS PA processes the following SMF record types:

- CICS Monitoring Facility (type 110)
- DB2 accounting (type 101)
- WebSphere MQ accounting (type 116)
- System Logger (type 88)

1.5.2 Resource Management Facility

Resource Management Facility collects system-wide data that describes the processor activity (WAIT time), I/O activity (channel and device usage), main storage activity (demand and swap paging statistics), and system resources manager (SRM) activity (workload).

RMF™ is a centralized measurement tool that monitors system activity to collect performance and capacity planning data. The analysis of RMF data provides the basis for tuning the system to user requirements. You can also use it to track resource usage.

You can also use RMF workload activity reports in conjunction with the CICS PA Workload Activity report. This combination helps you to understand from a CICS perspective how well your CICS transactions are meeting their response time goals.

1.5.3 Generalized Trace Facility

CICS trace entries can be recorded through Generalized Trace Facility (GTF), and reports produced with Interactive Program Control System (IPCS). GTF is an integral part of the z/OS system and traces the events of DASD seeking addresses on start I/O instructions, SRM activity, page faults, I/O activity, and supervisor services. Execution options specify the system events to be traced.

CICS GTF data can be combined with data for other components, for example, the data about use of VTAM buffers.

GTF is generally used to monitor short periods of system activity. You should run it accordingly. No data reduction programs are provided with GTF. To extract and summarize the data into a meaningful and manageable form, you can either write a data reduction program yourself or use one of the program offerings that are available.

1.5.4 Tivoli Decision Support for OS/390

This product collects and analyzes data from CICS and other IBM systems and products. With Tivoli Decision Support, you can build reports that help you manage:

- Service levels
- Availability
- Performance and tuning
- Capacity planning
- Change and problem management
- Accounting

Several ready-made reports are available. In addition, you can generate your own reports to meet specific needs.

2

A quick start to CICS Performance Analyzer

This chapter introduces you to using the CICS Performance Analyzer (PA) screen. It also help you to understand the CICS PA concepts. Follow along if this is your first time using CICS PA.

We start with an overview of CICS PA operation, the system requirements, our Interactive System Productivity Facility (ISPF) setup, and preparing the system management facility (SMF) data. Then we show you how to:

- Start CICS PA
- Use the Take-up facility to easily define CICS systems and SMF data files to CICS PA
- Maintain system definitions
- Define Report Sets to request reports and extracts from our defined systems and files
- Submit report requests to run in batch
- View report output
- Tailor reports using Report Forms
- Filter the data using selection criteria and Object Lists

This chapter introduces you to only a fraction of the CICS PA functionality. However, the other reports, extracts, and functions offered by CICS PA are essentially variations or extensions of what is covered here.

The Historical Database (HDB) facility employs much of this functionality. We recommend that you first become familiar with the CICS PA facilities described in this chapter before you explore Chapter 19, “Historical Database” on page 415.

2.1 What CICS PA is

CICS PA for z/OS helps you tune, manage, and plan your CICS systems effectively. It is a reporting tool that provides about the performance of your CICS systems and applications. Figure 2-1 shows an overview of CICS PA operation.

CICS PA helps you to analyze all aspects of your CICS systems, including:

- CICS application performance
- CICS system resource usage
- Cross-system performance, including multi-region operation (MRO) and advanced program-to-program communication (APPC)
- Transaction groups, including CICS Web Support, Internet Inter-ORB Protocol (IIOP), external call interface (ECI) over Transmission Control Protocol/Internet Protocol (TCP/IP)
- CICS Business Transaction Services (BTS)
- MVS Workload Manager (WLM)
- Exception events that cause performance degradation
- Transaction file and temporary storage usage
- External subsystems, including DB2, IMS (database control (DBCTL)), and WebSphere MQ
- System Logger performance

CICS PA also provides a Historical Database facility to help you manage the performance data for your CICS transactions.

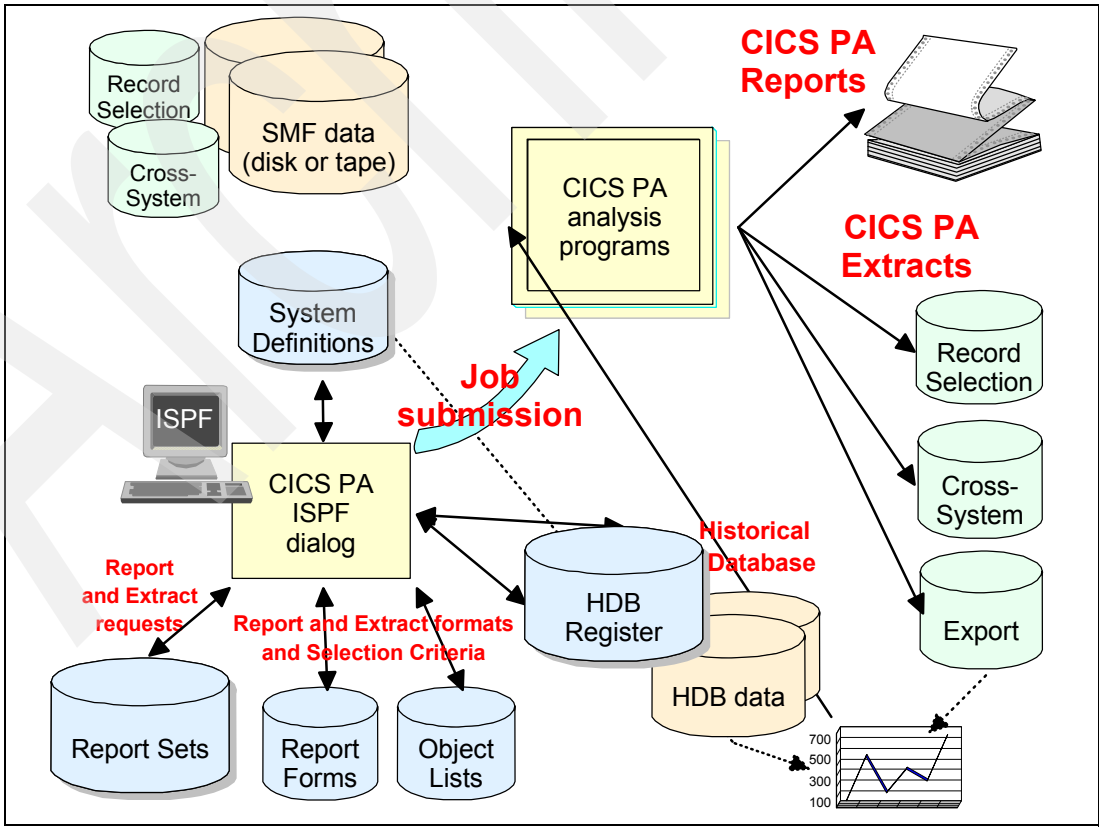

Figure 2-1 CICS PA overview

CICS PA provides an ISPF-based menu-driven screen that helps you to create, maintain, and submit Report Sets for batch processing. A Report Set allows you to define a set of report and extract requests to run as a one-step job with one pass of the input data. You can define any number of Report Sets. You can also include any number of reports and extracts in a single Report Set. Plus, you can select report categories or individual reports for submission independent of the Report Set.

You can use Report Forms to tailor the format and content of reports and extracts. Specify selection criteria to filter the data on the value of particular fields. Object Lists provide a convenient way to specify lists of values under Selection Criteria.

CICS PA produces reports and extracts using data normally collected by your system in MVS SMF data sets. This includes:

- CICS Monitoring Facility (CMF) performance class, exception class, and transaction resource class data written as SMF type 110 records
- DB2 accounting data written as SMF type 101 records
- WebSphere MQ accounting data written as SMF type 116 records
- MVS System Logger data written as SMF type 88 records

The System Definitions facility allows you to define the systems, SMF data files and groups for reporting on. A Take-up facility is provided.

CICS PA can process Record Selection and Cross-System Work extract data sets in a similar way to the SMF data sets.

Export data sets contain extracts of CMF performance data that is suitable for further analysis and graphing by your favorite database or spreadsheet tools.

The HDB Register is an inventory of all information associated with the Historical Database Manager. HDBs save performance data in data sets that are managed from the screen. You can run reports on your HDB or export the HDB data to DB2 tables. Report Forms can be used to control the format and content of the reports. You can specify selection criteria to filter the data that is reported or exported.

There are two types of HDBs:

- **List HDB data set**: One record represents one transaction. Typically, List HDBs are used to analyze recent transaction events. Data is usually only required for a short period of time.
- **Summary HDB data set**: One record represents a summary of transaction activity over a user-specified time interval. Typically, Summary HDBs are used for long-term trend analysis and capacity planning. Data is retained for a longer period of time, sometimes years.

2.2 System requirements

Refer to the *CICS Performance Analyzer for z/OS User's Guide*, SC34-6307, for the hardware, software, and storage requirements. In addition, there are several program temporary fixes (PTFs) that are required to support the workloads and CICS PA functions described in this book.

Apply the relevant PTFs in Table 2-1 to support the new CICS Transaction Server monitoring features:

- CMF Transaction resource class data for file and temporary storage queue usage
- Application Naming (DFHAPPL)
- CICS Resource Manager Interface (DFHRMI)

Table 2-1 PTFs to enable new monitoring features of CICS Transaction Server (TS)

Product	APAR	PTF
CICS TS V2.2	PQ63143 PQ76701 PQ76703	UQ68396, UQ68398, UQ68400
CICS TS V1.3	PQ63141 PQ76695 PQ76698	UQ70905, UQ70908, UQ70913

Apply the PTFs in Table 2-2 for CICS Performance Analyzer.

Table 2-2 PTFs for CICS Performance Analyzer

Product	APAR	PTF
CICS PA V1.3	PQ77980 PQ79058	UQ80393 UQ81351

Apply the PTFs in Table 2-3 for ISPF.

Table 2-3 PTFs for ISPF

Product	APAR	PTF
ISPF	OA04921	to be determined

2.3 Recommended ISPF setup

The CICS PA screen is an ISPF application that follows Common User Access (CUA) conventions. You can use ISPF standard facilities to customize the screen. This section contains some ISPF setup recommendations to help you use CICS PA efficiently.

Screen size and scrolling

Set the screen size in your session parameters to 32 lines. CICS PA screens are optimized for 32 lines, but accommodate 24 lines by scrolling backward (F7) and forward (F8).

Function keys

CICS PA uses standard conventions for function keys. You can use the ISPF commands KEYS and KEYLIST to assign alternative functions to the keys. For a list of the CICS PA default settings, select **Help -> Keys Help** in the action bar or enter `KEYSHELP` on the command line.

If you are new to CICS PA, ensure that the function keys are displayed at the bottom of the screens. The ISPF command PFSHOW ON|OFF turns on and off the display of the function keys.

Prompt (F4)

Input fields with a plus sign (+) to the right of the field, or to the right of the column heading, signify that Prompt is available. To use this facility, position the cursor on the input field and press Prompt (F4). A list of available values is displayed from which you can select one (then press Enter) or more (then press Exit) as appropriate.

Mouse options

The CICS PA Report Set panel is a tree structure of report categories and reports. The report categories act as folders that can expand (to show) and collapse (to hide) the reports contained within them. If your terminal emulation permits, configure your mouse options to activate the lightpen function. You can then use the left button of your mouse to click the plus sign (+) to expand and the minus sign (-) to collapse the report categories. Alternatively, you can enter line action `S`.

CUA attribute settings

The CICS PA screen is designed to use the default CUA attributes. However, we recommend that you set the Point-and-Shoot field to easily distinguish Point-and-Shoot fields from other types of fields. You can use the ISPF CUAATTR command to change the attribute settings. As shown in Figure 2-2, we changed Point-and-Shoot to yellow (highlighted in bold). For better distinction, you can also set the highlight attribute to REVERSE (reverse video).

```
                 CUA Attribute Change Utility
Command ===> ____________________________________________________ Defaults

Panel Element                  Color         Intensity  Highlight
                                                                More:     +
Choice Entry Field . . . . . . TURQ          LOW        USCORE
List Entry Field . . . . . . . TURQ          LOW        USCORE
List Item Description  . . . . GREEN         LOW        NONE
List Items . . . . . . . . . . WHITE         LOW        NONE
Normal Entry Field . . . . . . TURQ          LOW        USCORE
Normal Text  . . . . . . . . . GREEN         LOW        NONE
Point-and-Shoot  . . . . . . . YELLOW        HIGH       NONE
Reference Phrase . . . . . . . WHITE         HIGH       NONE
```

Figure 2-2 Recommended CUAATTR settings for CICS PA

Point-and-Shoot fields

CICS PA employs the Point-and-Shoot field. For efficient use, enter the ISPF SETTINGS command to display the ISPF Settings screen. Then select **Tab to point-and-shoot fields** (highlighted in bold in Figure 2-3).

Long and short messages

CICS PA uses both long and short messages. Short messages display at the top right of the screen on the same line as the screen title. After a short message is displayed, you can press Help (F1) to display more information in a long message.

To display long messages in a pop-up window, enter the SETTINGS command and select **Long message in pop-up** (highlighted in bold in Figure 2-3). If it is a field in error, the pop-up window displays immediately above or below the field in error. If this option is *not* selected,

long messages of less than the screen width display immediately above or below the command line.

```
                                ISPF Settings
Command ===> ____________________________________________________________

Options                                     Print Graphics
  Enter "/" to select option                  Family printer type 2
  _  Command line at bottom                   Device name . . . . _
  /  Panel display CUA mode                   Aspect ratio  . . . 0
  /  Long message in pop-up
  _  Tab to action bar choices
  /  Tab to point-and-shoot fields          General
  /  Restore TEST/TRACE options               Input field pad . . N
  _  Session Manager mode                     Command delimiter . ;
  /  Jump from leader dots
  _  Edit PRINTDS Command
  /  Always show split line
  _  Enable EURO sign

Terminal Characteristics
  Screen format   3  1. Data    2. Std     3. Max     4. Part
```

Figure 2-3 Recommended ISPF settings for CICS PA

2.4 Preparing the SMF data for CICS PA

CICS PA processes non-active SMF data sets. There is no special preparation required for CICS PA other than to dump the active SMF data sets at an appropriate time.

CICS and other subsystems, such as DB2, WebSphere MQ, and the MVS System Logger, write their SMF records to the active SMF data set. In order for CICS PA to work with the inactive copy of this data, you need to perform several steps.

In a CICS region to ensure that all the current SMF data is available, you may need to flush the buffers within CICS that hold any SMF data. You can do this by turning off and on performance monitoring, using the CEMT SET MONITOR command. You only need to flush the buffers when the CICS region is not shut down.

After all the SMF data from the CICS region is on the active SMF data set, you need to dump this data to an inactive SMF data set. First you switch the recording of SMF data from one data set to another. All SMF data in storage is written out before the transfer is made. This switch is performed by issuing the /I SMF operator command. The switch of SMF data sets takes place automatically when the active SMF data set becomes full.

To dump the SMF data set, the SMF dump program (IFASMFDP) is provided. This program transfers the contents of the active SMF data set to an output data set. Then it resets the status of the dumped data set to *empty* so that SMF can use it again for recording data. CICS PA uses this output data set as the input data for its report processing. See *z/OS V1R4.0 MVS System Management Facilities (SMF)*, SA22-7630, about dumping SMF data.

2.5 Starting CICS PA

The CICS PA screen is invoked when you enter the following command on the ISPF Command Shell screen (option 6) command line:

```
ex 'CICSPA13.SCPAEXEC(CPAOREXX)' 'CICSPA13 E'
```

If CICSPA13 is not the high-level qualifier of your CICS PA Release 3 data sets, then alter the command accordingly.

You can also define it as a standard selection on ISPF screens. For examples of how to do this, refer to the “Installation” chapter in the *CICS Performance Analyzer for z/OS User’s Guide*, SC34-6307.

2.5.1 CICS PA Primary Option Menu

Upon entry to the CICS PA screen, you see the CICS PA Primary Option Menu as shown in Figure 2-4. If you are using CICS PA for the first time, you can select option 0 (CICS PA Profile) to review or modify your default profile settings. This is optional because the CICS PA defaults are sufficient for us to get started. CICS PA allocates new data sets on your behalf when it needs them to save your report requests.

```
V1R3M0          CICS Performance Analyzer - Primary Option Menu
Option ===> ____________________________________________________

0  CICS PA Profile       Customize your CICS PA dialog profile
1  System Definitions    Specify CICS Systems, SMF Files and Groups
2  Report Sets           Request and submit reports and extracts
3  Report Forms          Define Report Forms
4  Object Lists          Define Object Lists
5  Historical Database   Collect and process historical data
X  Exit                  Terminate CICS PA
```

Figure 2-4 CICS PA Primary Option Menu

2.6 System definitions

Before you request CICS PA reports, you must first define the CICS systems (generic APPLIDs) on which you want to report. You also may need to define DB2 subsystems for the DB2 report, MQ subsystems for the WebSphere MQ report, and MVS System Loggers for the System Logger report.

You must also specify the SMF data sets for the systems (CICS, DB2, MQ, Logger), for the MVS System (Image) where they execute, or for both. In addition, you can define groups of systems for reporting purposes, such as those systems that connect via interregion communication/multiregion operation (IRC/MRO) or intersystem communication/advanced program-to-program communication (ISC/APPC).

To specify system definitions, select option 1 from the Primary Option Menu (Figure 2-4).

Tip: You can link directly to System Definitions from anywhere in the screen by entering `SYSDEFS` on the command line.

2.6.1 System Definitions Menu

The first time that you invoke System Definitions, you see the System Definitions Menu (Figure 2-5). From this menu, you can:

- Define systems, SMF files, and groups on which you want to report.
- Maintain SMF files for each system, for each MVS system (Image), or for both.
- Maintain group definitions for reporting purposes.
- Use the data Take-up facility to extract details of your systems from an SMF file for automatic take-up into your system definitions.

You can choose to bypass this menu in the future by selecting “Always go directly to Systems View” as shown in bold at the bottom of Figure 2-5. In this scenario, we select option 4.

```
                  System Definitions Menu
Command ===> ____________________________________________

Select an option then press Enter.

4  1. Define Systems, SMF Files and Groups
   2. Maintain SMF Files
   3. Maintain Group definitions
   4. Take-up from SMF File

Enter "/" to select option
_  Always go directly to Systems View
```

Figure 2-5 System Definitions Menu

2.6.2 Take-Up from SMF

An easy way for us to start is to let CICS PA set up our system definitions by using the Take-up facility. This facility populates the system and file definitions with details extracted from SMF files.

Since we selected option 4 on the System Definitions Menu screen, we now see the Data Take-Up from SMF screen as shown in Figure 2-6. Specify the details of the SMF file on which you want to report and then press Enter. CICS PA generates a batch job to extract the take-up details from the SMF data set.

```
                      Data Take-Up from SMF
Command ===> ________________________________________________

Specify the SMF File for data take-up and press Enter

Data Set Name . . . 'CICSRS7.SMF110.TESTCASE'_____________________

Specify details if data set is not cataloged:
 UNIT  . . . . . ________  +       VOLSER  . . . ______  +
 SEQ Number  . . ___ (1 to 255)

Execution Mode:
2  1. Submit Batch JCL
   2. Edit Batch JCL
```

Figure 2-6 System definitions: Data Take-Up from SMF screen

After the job is submitted, press F3 until you return to the Primary Option Menu (Figure 2-4 on page 29). Again select option 1 (System Definitions). You are now prompted by CICS PA to update your system definitions with the results of the batch job. Figure 2-7 shows the message "`CICS PA has completed extracting systems from the following SMF File`", which you receive when the SMF extract is complete.

```
                    Data Take-Up from SMF
Command ===> ____________________________________________

        ********************************************
        *             Take-Up from SMF             *
        ********************************************

CICS PA has completed extracting systems from the following
SMF File:

Data Set . . : 'CICSRS7.SMF110.TESTCASE'

Instructions:
  Press ENTER to continue adding the systems.
  Enter DEFER command to defer adding the systems.
  Enter END or CANCEL command to cancel adding the systems.
```

Figure 2-7 Populating your system definitions with take-up details

Press Enter to tell CICS PA to populate your system definitions with the details extracted from the SMF file. When complete, the System Definitions Menu is displayed with the message "`Take-up was successful`".

Note: When you run an initial take-up, CICS PA defines the systems, the files, and the system-file relationships. When you run a second or subsequent take-up for systems that are already defined to CICS PA, then only the SMF files are added. Then you need to define the system-file relationships for the added files yourself if required.

2.6.3 Maintain system definitions

We now look at the results of the take-up. From the System Definitions Menu (Figure 2-5), select option 1 to display the System Definitions maintenance screen. This is where you define to CICS PA your CICS Systems (APPLIDs), MVS Images, DB2 and MQ Subsystems, and MVS System Loggers so that:

- They can be requested for report and data extract processing
- The SMF files containing the data can be defined

```
                              System Definitions                 Row 1 from 12
Command ===> ____________________________________________ Scroll ===> CSR

Select a System to edit its definition, SMF Files and Groups.
                                                                   SMF Files
/   System   Type     Image                Description             System
S   SC66     Image             System added by take-up             SC66
_   SCSCPAA1 CICS     SC66     System added by take-up             SC66
_   SCSCPTA1 CICS     SC66     System added by take-up             SC66
_   SCSCPFA1 CICS     SC66     System added by take-up             SC66
_   SCSCPJA3 CICS     SC66     System added by take-up             SC66
_   SCSCPJA6 CICS     SC66     System added by take-up             SC66
_   SCSCPJA7 CICS     SC66     System added by take-up             SC66
_   SCSCPTA2 CICS     SC66     System added by take-up             SC66
_   SCSCPAA4 CICS     SC66     System added by take-up             SC66
_   SC66LOGR Logger   SC66     System added by take-up             SC66
_   D7Q2     DB2      SC66     System added by take-up             SC66
_   SCSCPJA9 CICS     SC66     System added by take-up             SC66
********************************* End of list *********************************
```

Figure 2-8 System Definitions after Take-Up from SMF

CICS PA has automatically defined the MVS image, SC66. MVS Image entries are identifiable by *Image* in the Type column and the Image column is blank. APPLIDs are listed with a type of *CICS* and Image SC66.

You can see that the SMF Files System is the image SC66 for all systems. This means that files defined to SC66 are available to all systems defined to that Image. Therefore, you only need to define the files once.

Specifying SMF files is optional. If you do not specify them here, then when it comes time to submit your report request, CICS PA generates job control language (JCL) with the SMF File data set names unresolved. You have the option to edit the JCL at that time.

You can define new systems by entering the NEW command on the command line. Consider the following examples:

```
NEW CICSPAOR CICS
NEW SC43 IMAGE
```

In this example, type line action S next to the SC66 Image entry (highlighted in bold in Figure 2-8) to select it from the System Definitions screen.

2.6.4 MVS image definition

Let's look further at the results of the take-up. Now you see the MVS Image display as shown in Figure 2-9. Notice that the item in bold indicates the files for this system.

```
                                MVS Image                Row 1 of 1 More: >
 Command ===> ____________________________________________ Scroll ===> CSR_

 MVS Image definition:
  MVS Image  . . . . . SC66
  Description  . . . . System added by take-up____________

 / Exc              SMF Data Set Name +                UNIT +  SEQ VOLSER +
 _     'CICSRS7.SMF110.TESTCASE'_____________________ DASD____ ___ ______
********************************* End of list ****************************
```

Figure 2-9 MVS Image definition: Files

SMF Files for this system

Observe that the SMF data set name listed is the one specified in the take-up job. You can specify as many files as you want. CICS PA processes them all (unless they are excluded). We recommend that you specify the files in time sequence (earliest first), since CICS PA processes them in the order that they are specified. Various line actions are available to help you do this: `I` (Insert), R (Repeat), C (Copy), M (Move), and D (Delete).

Deleting a file here only deletes the relationship, not the file itself. Also, you can use the X line action to exclude an SMF File from report processing. Excluded files are marked with an asterisk (*) in the Exc column.

To add a file to the list, you can type the data set name directly, or select from a list of available files by entering line action `S` or pressing F4 (Prompt) from the data set name field.

Groups this system belongs to

Press F11 to scroll right. More: > is displayed in the top right corner to remind you that there is more information for this system. A screen like the example in Figure 2-10 is displayed where you can specify the groups to which this system belongs on the line under Group + and Description.

```
                                MVS Image                Row 1 of 1 More: >
 Command ===> ____________________________________________ Scroll ===> CSR_

 MVS Image definition:
  MVS Image  . . . . . SC66
  Description  . . . . System added by take-up____________

/   Group +                 Description
_   ________  ______________________________________
********************************* End of list ****************************
```

Figure 2-10 MVS Image definition: Groups

Groups enable you to connect systems together for consolidated (cross-system) reporting. This is especially useful for MRO, APPC or other systems that share workloads. For examples of grouping systems, see Figure 7-21 on page 189 and Figure 13-7 on page 289.

Press F3 to return to the System Definitions screen.

2.6.5 CICS System definition

From the list of System Definitions, you can select other system entries to review or modify. For example, select the first CICS system. Then you see a screen like the example in Figure 2-11.

```
                              CICS System              Row 1 of 1  More: >
Command ===> ____________________________________________ Scroll ===> ____

CICS System definition:
 APPLID . . . . . . . . SCSCPAA1  MVS Image . . SC66____
 Description  . . . . . System added by take-up______________
 CICS Version (VRM) . . 620
 MCT Suffix . . . . . . __
 MCT Load Library . . . ____________________________________________
 SDFHLOAD Library . . . ____________________________________________
 Dictionary DSN . . . . ____________________________________________

  Exc             SMF Data Set Name +                UNIT +  SEQ VOLSER +
_   ____________________________________ _________ ___ ______
******************************** End of list ****************************
```

Figure 2-11 CICS System definition

To define a CICS System for reporting, you only need to specify the APPLID. All other fields are optional.

Notice the MVS Image (SMF ID) to which this CICS System (APPLID) belongs. The MVS Image allows CICS PA to:

- Distinguish between multiple CICS systems that have the same APPLID but run on different MVS Images.
- Share SMF files that contain data for more than one system. By defining the SMF files to the MVS Image, you need only define your SMF files once.
- Request reporting by MVS Image. All CICS Systems (APPLIDs) belonging to that MVS Image are selected.

Tips:

- You can specify a masked pattern for the name of your system. For example, you can define APPLID SCSCP*. This allows all CICS systems matching this pattern (SCSCPAA1, SCSCPTA1, and so on) to share the System definition, SMF files, and groups specified once for SCSCP*.
- CICS systems that are not defined to CICS PA can still be reported, but only if their Image is defined. For example, if CICSPFOR (your production file owning region) also runs on Image SC66, then at run report time, you can request reporting for this system. You specify a System Selection of CICSPFOR and SC66, even though CICSPFOR is not defined to CICS PA.

These other fields may be important to you in the future:

- **MCT**: You must specify the monitoring control table (MCT) suffix and MCT load library if you want to include CMF user fields in your reporting. Otherwise, CICS PA uses the system default MCT for the version of CICS you are reporting.
- **Dictionary DSN**: You can build a data set to contain the CMF dictionary record for those times when the SMF file does not contain one, so that CICS PA reporting can progress.

CMF uses a dictionary record to map the fields in the CMF performance class records. CICS writes a dictionary record when CMF starts, but not when SMF switches data sets. You only need to build a dictionary record if you want to include your CMF user fields (from user defined EMPs in the MCT) in your reporting. Otherwise, CICS PA uses the default dictionary record for the version of CICS that you are reporting.

If you want CICS PA to generate the Dictionary record for this CICS system, follow these steps:

a. Specify the Dictionary DSN.

b. Specify the SDFHLOAD Library so that CICS PA can use the DFHMNDUP utility to generate the Dictionary record.

c. Select **Dictionary** in the action bar. CICS PA immediately populates the specified data set with the Dictionary record for this CICS system. If the data set is not cataloged, CICS PA allocates it before writing the record. If the data set is cataloged, CICS PA overwrites its contents with the new Dictionary record.

At JCL generation time, CICS PA inserts the cataloged Dictionary DSN in the CPADICTR DD statement.

Tip: If you are using an MCT to exclude CMF fields, you do *not* need to specify the MCT to CICS PA for that reason alone. Check that you did not exclude fields that CICS PA requires for your reporting. Refer to the *CICS Performance Analyzer for z/OS Report Reference*, SC34-6308, for the list of required CMF fields for:

- Cross-System Work report and extract
- Transaction Group report
- BTS report
- Workload Activity report
- DB2 report

2.6.6 Other system definitions: DB2, WebSphere MQ, System Logger

Other systems are identified by their type, such as DB2, MQ, or LOGGER. To define them to CICS PA, the System Definitions facility is used in a similar way to CICS APPLIDs and MVS Images.

The initial system definition is complete. You can now move on to requesting reports. Press F3 until you return to the Primary Option Menu (Figure 2-4 on page 29).

2.7 Requesting reports and extracts

To build report and extract requests, select option 2 on the Primary Option Menu (Figure 2-4 on page 29).

2.7.1 Creating the Report Sets data set

You are prompted to create the Report Sets data set as shown in Figure 2-12. This is the data set in which CICS PA saves your report and extract requests.

```
--------------------- Confirm Create -------------------

 The Report Sets Data Set is not cataloged.

 xxxxxxxx.CICSPA.RSET

 Press ENTER to create the data set using default
 allocation characteristics.

 Use EXIT or CANCEL to return without creating the
 data set.
```

Figure 2-12 Creating the Report Sets data set

Press Enter to create the Report Sets data set. Otherwise, cancel and from the Primary Options Menu (Figure 2-4 on page 29), select option 0.3 (option 0 and then option 3) to specify the data set name of your choice.

Tip: You may find it useful to keep separate CICS PA data sets for production and test environments.

2.7.2 Report Sets

The Report Sets facility defines, maintains, and runs report and extract requests. A Report Set contains a set of report and extract requests to be submitted and run as a single job. You can define as many Report Sets as you want. You can also define any number of reports and extracts in a Report Set. Figure 2-13 shows the list of Report Sets, which initially is empty.

```
                                Report Sets
 Command ===> NEW REDBOOK_____________________________________ Scroll ===> PAGE

 Report Sets Data Set  . . .  xxxxxxxx.CICSPA.RSET

  /    Name             Description                Changed        ID
********************************* End of list *********************************
```

Figure 2-13 Report Sets: Defining a new Report Set

Use the NEW command to create your first Report Set. A Report Set is a member in the Report Sets data set.

2.7.3 Editing the Report Set

You can now start editing your Report Set shown in Figure 2-14. The list of available reports and extracts is presented as a tree structure where they are grouped by category. You can use line action S to expand and collapse the categories to show or hide the items within it. This is similar to the way some PC tools display folders and their contents. If your terminal emulation allows, you can set your mouse as a lightpen and then click the + to expand or - to collapse the category. Alternatively, you can use cursor selection. Position the cursor on the + or - sign and press Enter.

```
EDIT                        Report Set - REDBOOK                    Row 1 of 34
Command ===> ____________________________________________ Scroll ===> CSR_

Description . . . Demonstration Report Set_________

Enter "/" to select action.

___             ** Reports **                          Active
     -  ___     Options                                  No
                S__   Global                             No
     -  ___     Selection Criteria                       No
                ___   Performance                        No
                ___   Exception                          No
     -  ___     Performance Reports                      No
                S__   List                               No
                ___   List Extended                      No
                ___   Summary                            No
                ___   Totals                             No
                ___   Wait Analysis                      No
                ___   Cross-System Work                  No
                ___   Transaction Group                  No
                ___   BTS                                No
                ___   Workload Activity                  No
     -  ___     Exception Reports                        No
                ___   List                               No
                ___   Summary                            No
     -  ___     Transaction Resource Usage Reports       No
                ___   File Usage Summary                 No
                ___   Temporary Storage Usage Summary    No
                ___   Transaction Resource Usage List    No
     -  ___     Subsystem Reports                        No
                ___   DB2                                No
                ___   WebSphere MQ                       No
     -  ___     System Reports                           No
                ___   System Logger                      No
     -  ___     Performance Graphs                       No
                ___   Transaction Rate                   No
                ___   Transaction Response Time          No
     -  ___     Extracts                                 No
                ___   Cross-System Work                  No
                ___   Export                             No
                ___   Record Selection                   No
                ** End of Reports **
```

Global specifications

To expand or collapse categories, choose one of these options:

- Enter line action S
- Point and click - or + with your mouse as a lightpen
- Click - or + to select it

Figure 2-14 Editing a Report Set

You can use line action S to select the reports and extracts that you want to edit, and the global options and selection criteria that you want to apply to them. You can also issue line actions on report categories and on ** Reports ** at the top of the tree. Enter the / line action next to an item in the tree to see the list of possible actions.

The selection criteria enables you to filter the CMF data for your reports and extracts using any field or combination of fields. For example, to include data only for a particular transaction ID, user ID, or only for a specific period of time.

Select the global options and then select the Performance List report. Type S next to both options and then press Enter.

2.7.4 Global Options

Figure 2-15 shows the Report Set Global Options. They define general control information that applies to all the reports and extracts in the Report Set.

```
                              REDBOOK - Global Options
Command ===> ____________________________________________________________

System Selection:
 CICS APPLID . . ________  +  Image . . ________  +  Group . . ________  +
 DB2 SSID  . . . ____  +      Image . . ________  +  Group . . ________  +
 MQ SSID . . . . ____  +      Image . . ________  +  Group . . ________  +
 Logger  . . . . ________  +  Image . . ________  +  Group . . ________  +

Report Formatting Options:
 Print Lines per Page . . 60_  (1-255)
 Time Zone  . . . . . . . ___  (Blank for system default or -12 to +12 hours)
 Date Delimiter . . . . . /
 Time Delimiter . . . . . :
```

Figure 2-15 Reviewing Global Options

Note the following points:

- To specify the systems (and inherently the files) on which you want to report, you can specify:
  - A CICS APPLID
  - A DB2 subsystem ID
  - A WebSphere MQ subsystem ID
  - An MVS System Logger ID
  - An MVS Image ID
  - A Group ID

  You can type the IDs directly or use Prompt (F4) to select from a list of predefined systems and groups.
- You can specify System Selection in one or more of the following ways:
  - As a global option on the Global Options screen.
  - As a local option on individual report or extract screens. Report-level specifications take precedence over the global specification.
  - As a global option on the Run Report Set screen. The run-time global option overrides the Report Set global option and optionally the report-level specifications.
  - By editing the JCL before submit.
- Print Lines per Page is the maximum number of report lines to print on each page. The default is 60. You can also specify this option for individual reports. Report-level specifications take precedence over the global specification.
- Date and Time delimiters specify the separator characters for the date and time-of-day in the reports and extracts. A slash (/) and a colon (:) are the defaults.
- The Time Zone specifies the number of hours east or west of Greenwich Mean Time (GMT). For example, to synchronize the CMF and DB2 time stamps, specify Time Zone to match the time zone of the SMF data. However, if you are correlating DB2 data between CICS PA and DB2 PM reports, then you may want the CICS PA DB2 time stamps to be reported in GMT so that they can be more easily matched. If Time Zone is not specified, or it is set to zero, all times (CMF and DB2) are reported in GMT.

In this case, accept the default global options. Now you can exit or cancel to continue.

2.7.5 Specifying report options

The Performance List report gives the details of every transaction that executed. Figure 2-16 shows the screen where the Performance List report options are specified.

The report runs without you specifying any additional options. However, you may want to tailor it to help your analysis. If you want to specify a particular system that this report applies to, under System Selection, enter the System name (and optionally Image, Group, or both). Alternatively, you can select the required system from a list. To do this, position the cursor on the APPLID field (highlighted in bold) and press F4 (Prompt).

```
                    REDBOOK - Performance List Report
Command ===> ____________________________________________________________

System Selection:                        Report Output:
 APPLID . . ________  +                   DDname . . . . . . . . . LIST0001
 Image  . . ________  +                   Print Lines per Page . . ___ (1-255)
 Group  . . ________  +

Report Format:
 Form . . . ________  +
 Title  . . ____________________________________________________________
            ____________________________________________________________

Selection Criteria:
 _  Performance
```

Figure 2-16 Specifying report options: Using F4 (Prompt) to select from a list of systems

A selection list of available systems is displayed as shown in Figure 2-17. Enter line action `S` (as shown in bold) to select the system that you want.

```
                                Select a System                Row 1 to 8 of 8
Command ===> ___________________________________________ Scroll ===> PAGE

Select a System then press Enter.

   System    Image     Files  Description
S  SCSCPAA1  SC66       Yes   System added by take-up
.  SCSCPTA1  SC66       Yes   System added by take-up
.  SCSCPFA1  SC66       Yes   System added by take-up
.  SCSCPJA3  SC66       Yes   System added by take-up
.  SCSCPJA6  SC66       Yes   System added by take-up
.  SCSCPJA7  SC66       Yes   System added by take-up
.  SCSCPTA2  SC66       Yes   System added by take-up
.  SCSCPAA4  SC66       Yes   System added by take-up
******************************** End of list ******************************
```

Figure 2-17 Selecting a system

Then CICS PA sets the information under System Selection as shown in Figure 2-18.

```
                        REDBOOK - Performance List Report
Command ===> ____________________________________________________________


System Selection:                        Report Output:
 APPLID . . SCSCPAA1  +                   DDname . . . . . . . . . LIST0001
 Image  . . SC66____  +                   Print Lines per Page . . ___ (1-255)
 Group  . . ________  +

Report Format:
 Form . . . ________  +
 Title  . . ______________________________________________________________
            ______________________________________________________________

Selection Criteria:
 _  Performance
```

Figure 2-18 Specifying report options: System Selection information complete

If you decide not to specify the System Selection here, then you can do so when you run your Report Set and CICS PA prompts you.

Two important report options that we discuss later are the report format and selection criteria. They allow you to tailor the fields that appear in your reports and filter the data that is reported.

Exit to save your new report request.

2.7.6 Reports list

After you exit from the report, the Reports list is presented (Figure 2-19). You can define as many reports of the same type in a Report Set as you want.

You can use line action I (Insert) to define a new Performance List report, D to delete a report, or X to exclude it from reporting. When you finish defining your Performance List reports, exit to save the reports and return to the main Report Set edit screen.

```
                       REDBOOK - Performance List Reports          Row 1 from 1
Command ===> ____________________________________________ Scroll ===> PAGE

        ---- System Selection ----                          Selection
/  Exc  APPLID +  Image +  Group +   Output     Form +      Criteria
_       SCSCPAA1  SC66____ ________  LIST0001   ________      NO
******************************** End of list ********************************
```

Figure 2-19 Reports list

2.8 Running your reports

You must enter a SAVE command, select **File->Save** from the action bar, or press F3 (Exit) to save your Report Set definition in the Report Set data and exit. However, you do not need to save your Report Set before you run it.

To run the Report Set, enter the RUN command in the command line or select **File->Run** from the action bar. Alternatively, you can run individual reports or report categories by

entering the RUN line action next to the particular ones that you want to run. Figure 2-20 shows both methods.

```
EDIT                        Report Set - REDBOOK                    Row 1 of 21
Command ===> RUN_____________________________________________ Scroll ===> CSR_

Description . . . Demonstration Report Set_________

Enter "/" to select action.

___             ** Reports **                            Active
     -  ___     Options                                    Yes
                ___   Global                               Yes
     -  ___     Selection Criteria                         No
                ___   Performance                          No
                ___   Exception                            No
     -  ___     Performance Reports                        Yes
                RUN  List                                  Yes
                ___   List Extended                        No
                ___   Summary                              No
                ___   Totals                               No
                ___   Wait Analysis                        No
                ___   Cross-System Work                    No
                ___   Transaction Group                    No
                ___   BTS                                  No
                ___   Workload Activity                    No
     +  ___     Exception Reports                          No
     +  ___     Transaction Resource Usage Reports         No
     +  ___     Subsystem Reports                          No
     +  ___     System Reports                             No
     +  ___     Performance Graphs                         No
     +  ___     Extracts                                   No
                ** End of Reports **
```

Running Report Set

Global Options are automatically activated

Run report overriding Active status

Figure 2-20 Using RUN

2.8.1 Active status

Looking at the Report Set in Figure 2-20, you can see that the Performance List report and the Performance Reports category are active. Observe also that the Global Options are automatically activated by CICS PA when there is at least one active report or extract.

The Active status controls which reports in the Report Set are run when you submit a RUN request. When you enter RUN in the command line to run the Report Set, only active reports within active categories are selected for JCL generation. You can temporarily override the active status by typing the RUN line action next to any required reports and categories.

You can use line action D to deactivate or A to activate particular reports and categories.

2.8.2 Run Report Set

Before CICS PA generates the JCL, you are prompted to supply run-time options as shown in Figure 2-21.

```
                              Run Report Set REDBOOK
Command ===> ____________________________________________________________

Specify run Report Set options then press Enter to continue submit.

System Selection:
 CICS APPLID . . ________  +  Image . . ________  +  Group . . ________  +
 DB2 SSID  . . . ____  +      Image . . ________  +  Group . . ________  +
 MQ SSID . . . . ____  +      Image . . ________  +  Group . . ________  +
 Logger  . . . . ________  +  Image . . ________  +  Group . . ________  +

 _  Override System Selections specified in Report Set

                                        ----- Report Interval ------
Missing SMF Files Option:                    MM/DD/YYYY  HH:MM:SS.TH
1  1. Issue error message               From __________  ___________
   2. Leave DSN unresolved in JCL       To   __________  ___
   3. Disregard offending reports

Enter "/" to select option
/  Edit JCL before submit
```

Only process SMF records with a time stamp within this date and time range or "time slot"

Figure 2-21 Run Report Set: Specifying run-time options

You can specify the following run-time options:

- **The system or group of systems to be reported**: CICS PA allows you to specify System Selection both in the Report Set and here at run-time. An Override System Selections option is provided to determine which specification takes precedence if both are specified:
  - When the override option is *not* selected, the run-time System Selection overrides the Report Set Global options only. It does not override any System Selections specified in the individual reports within the Report Set.
  - When the override option *is* selected, the run-time System Selection overrides all System Selections in the Report Set (Global Options *and* individual reports).
- **The date and time range or "time slot" of the SMF data that you want to process**: This reduces the volume of data and enables more efficient processing. If not specified, then CICS PA processes the entire SMF file or files. Any report intervals specified under Selection Criteria in your Report Set are then processed normally for this reduced period of data.
- **Missing SMF Files Option**: This specifies the remedial action to take if you have not defined SMF files for the systems to be reported (or they are all excluded).
- **To edit the JCL before submit**

Note: Because we specified System Selection on the Performance List Reports screen (Figure 2-19 on page 40), specifying System Selection now at run-time has no effect on that report unless we select the Override System Selections option.

From the Run Report Set screen, press Enter to generate the JCL.

2.8.3 JCL generation

Now you see an ISPF Edit session with the JCL as shown in Figure 2-22. You can store the job stream in your JCL library to submit from there, or as part of a job automation process.

Make any necessary changes. Then type SUBMIT (or SUB) on the command line and press Enter to submit the job.

```
EDIT       xxxxxxxx.SPFTEMP1.CNTL                          Columns 00001 00072
Command ===> SUB_____________________________________________ Scroll ===> PAGE
****** ****************************** Top of Data ******************************
000001 //USERID JOB (ACCOUNT),'NAME'
000002 //* CICS PA V1R3 Report JCL
000003 //CICSPA   EXEC PGM=CPAMAIN
000004 //STEPLIB  DD DSN=CICSPA.V1R3M0.SCPALINK,DISP=SHR
000005 //SYSPRINT DD SYSOUT=*
000006 //* SMF Input Files
000007 //SMFIN001 DD DSN=CICSRS7.SMF110.TESTCASE,
000008 //            DISP=SHR
000009 //* Command Input
000010 //SYSIN DD *
000011 * Report Set =REDBOOK
000012 * Description=Demonstration Report Set
000013 * Reports for System=SCSCPAA1
000014 *             Image =SC66
000015 *             Description=Demonstration Report Set
000016          CICSPA IN(SMFIN001),
000017                 APPLID(SCSCPAA1),
000018                 LINECNT(60),
000019                 FORMAT(':','/'),
000020            LIST(OUTPUT(LIST0001))
000021 /*
****** **************************** Bottom of Data ****************************
```

Edit the JCL if required and then enter SUB

Figure 2-22 Edit the Report Set JCL and submit the job

After you submit the job, exit until you return to the CICS PA Primary Option Menu (Figure 2-4 on page 29).

2.9 Viewing the report output

You can view the output using SDSF or ISPF option 3.8 Outlist Utility (from the Primary Options Menu, option 3 and then option 8). The CICS PA screen automatically assigns each report in the Report Set a unique DDname. In SDSF, you can each report separately by entering the question mark (?) action character in the NP column (Figure 2-23).

```
SDSF STATUS DISPLAY ALL CLASSES
COMMAND INPUT ===>                                          SCROLL ===> PAGE
NP   JOBNAME  JobID    Owner    Prty Queue      C  Pos  SAff  ASys Status            PrtDest            SecLabel TGNum  TGPct OrigN
?    CICSPAJ1 JOB29346 xxxxxxxx    1 PRINT      A  3406                              LOCAL                           2   0.00 LOCAL
```

Figure 2-23 SDSF: Displaying the job output by DDname

Then enter the S action character to select your report output (Figure 2-24).

```
SDSF JOB DATA SET DISPLAY
COMMAND INPUT ===>                                          SCROLL ===> PAGE
NP   DDNAME   StepName ProcStep DSID Owner    C Dest              Rec-Cnt Page-Cnt Byte-Cnt CC   Rmt  Node O-Grp-N  SecLabel PrMod
     JESMSGLG JES2                2 xxxxxxxx S LOCAL                 20            1,372  1           1 1                 LINE
     JESJCL   JES2                3 xxxxxxxx S LOCAL                 23            1,053  1           1 1                 LINE
     JESYSMSG JES2                4 xxxxxxxx S LOCAL                 40            1,986  1           1 1                 LINE
     SYSPRINT CICSPA            102 xxxxxxxx S LOCAL                 70            5,409  1           1 1                 LINE
S    LIST0001 CICSPA            103 xxxxxxxx S LOCAL                222           21,453  1           1 1                 LINE
```

Figure 2-24 SDSF: Selecting the report output by DDname

Figure 2-25 shows what you may see when suitable input data is specified.

```
V1R3M0                                          CICS Performance Analyzer
                                                   Performance List
 LIST0001 Printed at 17:20:04  3/29/2002    Data from 10:07:43  3/28/2002                    APPLID SCSCPAA1           Page       1

 Tran SC Term Userid   RSID Program    TaskNo Stop          Response Dispatch User CPU  Suspend DispWait  FC Wait   FCAMRq  IR Wait
                                              Time            Time     Time     Time     Time     Time     Time                Time
 CQRY S  0004 CICSUSER      DFHQRY         26 10:09:37.011    .5971    .1371    .0341    .4600    .4553    .0000        0    .0000
 CSGM S  0004 CICSUSER      DFHGMM         27 10:09:37.506    .4864    .1624    .0245    .3239    .3234    .0000        0    .0000
 CEDA TO 0004 CICSUSER      DFHEDAP        28 10:10:04.867  22.3878   5.9004   1.0167  16.4873    .5643    .0674        1    .0000
 CEDA TO 0004 CICSUSER      DFHEDAP        29 10:11:21.675  75.8603   2.7834    .5313  73.0770    .0599    .1231       12    .0000
 CEDA TO 0004 CICSUSER      DFHEDAP        30 10:12:35.400  66.0356   1.8070    .4299  64.2286    .0160    .0650       12    .0000
 CATR S       CICSUSER      DFHZATR        32 10:15:37.706    .4334    .1143    .0282    .3191    .3187    .0000        0    .0000
 CEDA TO 0004 CICSUSER      DFHEDAP        31 10:21:22.924 526.216   2.8898    .3436 523.326    .0217    .0154        1    .0000
 CEDA TO 0004 CICSUSER      DFHEDAP        33 10:22:15.994  39.9497   2.5449    .6930  37.4048    .0167    .1159       56    .0000
 CEDA TO 0004 CICSUSER      DFHEDAP        34 10:22:26.559   4.2486   1.7076    .7248   2.5411    .0275    .0198       26    .0000
```

Figure 2-25 Sample report output

2.10 Tailoring report formats

Report Forms allow you to design your own reports and extracts to fully exploit the wealth of information contained in the CICS Transaction Server (TS) CMF performance records. For example, if you suspect that there is a performance problem with transient data, you can create a Report Form that focuses on that aspect of CICS performance.

To build Report Forms, select option 3 from the Primary Option Menu (Figure 2-4 on page 29).

2.10.1 Creating the Report Forms data set

You are prompted to create the Report Forms data set. CICS PA saves your Report Forms in this data set.

Press Enter to create the Report Forms data set. Otherwise, cancel and from the Primary Option Menu (Figure 2-4 on page 29), select 0.4 (option 0 and then option 4)) to specify the data set name of your choice.

2.10.2 Report Form types

There are three types of Report Forms: LIST, LISTX and SUMMARY. You can tailor your reports and extracts using Report Forms of a compatible type:

- **LIST**: Specifies which fields are reported and the order of the columns. This type of form is applicable to:
  - Performance List report
  - Cross-System Work (Extended) report

  - Export extract
  - List HDB reports

- **LISTX**: Specifies which fields are reported, the order of the columns, up to three sort fields (ascending or descending), and a processing limit on one of the sort fields. This type of form is applicable to:
  - Performance List Extended report
  - Cross-System Work (Extended) report (sort sequence and limit ignored)
  - Export extract (sort sequence and limit ignored)
- **SUMMARY**: Specifies which fields are reported, the order of the columns, up to three sort fields (ascending), and numeric functions (average, standard deviation, total, minimum, maximum). This type of form is applicable to:
  - Performance Summary report
  - Export extract
  - Summary HDB reports

2.10.3 Report Forms list

The Report Forms list displays all the Report Forms in the Report Forms data set and shows their type and description. The initial Report Forms list is empty as shown in Figure 2-26. You can use the NEW command to create your own Report Form or you can select from the many samples provided. We use the samples.

To display the list of Sample Report Forms, enter the `SAMPLES` command or select **Samples** in the action bar as shown in Figure 2-26.

```
  File  Confirm  Samples  Options  Help
--------------------------------------------------------------------------------
                                Report Forms
Command ===> SAMPLES_____________________________________ Scroll ===> PAGE

Report Forms Data Set  . . .  xxxxxxxx.CICSPA.FORM

/  Name     Type              Description              Changed        ID
********************************* End of list *********************************
```

Figure 2-26 Report Forms list: Requesting Sample Report Forms

2.10.4 Sample Report Forms

On the Sample Report Forms screen (Figure 2-27), scroll down until you find the Sample Report Forms that meet your requirements.

We selected two Report Forms for Transient Data Analysis:

- TDLST lists all transactions, showing their Transient Data usage
- TDSUM summarizes Transient Data usage for each transaction ID

```
--------------------- Sample Report Forms----------------------
                                                Row 72 to 87 of 90
Command ===> ________________________________ Scroll ===> CSR_

Select one or more Sample Report Forms then press EXIT.

     Name    Type               Description
 S TDLST     LIST     Transient Data Activity
 S TDSUM     SUMMARY  Transient Data Activity
 _ TRAPLSUM  SUMMARY  Transactions by Application Tran
 _ TRARTSUM  SUMMARY  Transaction Routing Analysis (3)
 _ TRATDSUM  SUMMARY  Transactions by Applid and TOD
 _ TRRTESUM  SUMMARY  Transaction Routing Analysis (1)
 _ TRTCLSUM  SUMMARY  Transactions by Tranclass Name
 _ TRTESUM   SUMMARY  Transaction Usage by Terminal ID
 _ TRTODSUM  SUMMARY  Transactions by Time-of-Day
 _ TRTRASUM  SUMMARY  Transaction Routing Analysis (4)
 _ TSLST     LIST     Temporary Storage Activity
 _ TSSUM     SUMMARY  Temporary Storage Activity
 _ TSWTLST   LIST     Temporary Storage Wait Analysis
 _ TSWTSUM   SUMMARY  Temporary Storage Wait Analysis
 _ UOWLST    LIST     Transaction Network Unit-of-Work
 _ USTORLST  LIST     User (Task) Storage Analysis
```

Figure 2-27 Selecting Sample Report Forms

Exit to add these Report Forms to your Report Forms data set. You can see them in the Report Forms list in Figure 2-28. They are now available for report processing.

Before we finish, let's look at Report Form TDSUM to familiarize ourselves with the format of the report it will produce and introduce some of the features. Enter line action S to select TDSUM.

```
File  Confirm  Samples  Options  Help
-------------------------------------------------------------------------------
                              Report Forms                 2 members added
Command ===> ____________________________________________ Scroll ===> CSR_

Report Forms Data Set  . . . xxxxxxxx.CICSPA.FORM

 /  Name     Type              Description              Changed        ID
 _ TDLST     LIST    Transient Data Activity        2003/07/25 00:00 CICSPA
 S TDSUM     SUMMARY Transient Data Activity        2003/07/25 00:00 CICSPA
********************************* End of list *********************************
```

Figure 2-28 Report Forms list: Selecting a Report Form

2.10.5 Edit Report Form

You can now review or change the Report Form as shown in Figure 2-29.

```
File  Edit  Confirm  Upgrade  Options  Help
--------------------------------------------------------------------------------
                    EDIT SUMMARY Report Form - TDSUM        Row 1 of 11 More: >
Command ===> f response_____________________________________ Scroll ===> CSR_

Description  . . . . Transient Data Activity_________  Version (VRM): 620

Selection Criteria:
 _  Performance

    Field
/   Name +     S   Type    Fn   Description
__  TRAN____   A   _______ ___  Transaction identifier
i_  TASKCNT_       _______ ___  Total Task count
__  RESPONSE       _______ AVE  Transaction response time
__  TDGET___       _______ AVE  Transient data GET requests
__  TDPURGE_       _______ AVE  Transient data PURGE requests
__  TDPUT___       _______ AVE  Transient data PUT requests
h_  TDTOTAL_       _______ AVE  Transient data Total requests
__  TDWAIT__       TIME___ AVE  VSAM transient data I/O wait time
__  TDWAIT__       COUNT__ AVE  VSAM transient data I/O wait time
__  EOR_____       _______ ___  ---------------- End of Report ----------------
__  EOX_____       _______ ___  ---------------- End of Extract ---------------
********************************** End of list ********************************
```

Figure 2-29 Editing a Report Form

Note the following points:

- You can specify selection criteria in the Report Form. If a report that uses this form also has selection criteria defined, then records are selected for reporting only if they satisfy *both* criteria.
- If the Report Form does not meet your reporting requirements, you can change it so that only the fields you require in your report are above the EOR line (limited to a page width of 132), and only those you require in your extract are above the EOX line (no limit).

  The line actions that you can use to edit the Form include I (Insert), D or DD (Delete), C or CC (Copy), M or MM (Move), R or RR (Repeat).
- To add another field to the Form, you can either replace an existing field by overtyping it, or you can use line action `I` to insert a blank row to accept the new field. You can either type the field name (or first part of it) directly, or you can enter line action `S` to select the field name from a list of allowable fields.

  We entered line action `I` (Insert) to add a new field named RESPONSE into the Form.
- You can enter a FIND command to locate a character string in the display. Then press F5 or use the RFIND command to locate the next occurrence.
- You can enter line action `H` (Help) to obtain a detailed description of a field.
- More: > indicates that you can scroll Right (F11) to view more information. This includes field length, Dictionary definition, User Field offset and length, and report title. The title appears at the top of each page of the report immediately below the date and time. The first line of the specified title appears on the left of the report, and the second line on the right. You can also specify a Title for individual reports. This takes precedence over that in the Report Form.

Our form indicates that:

- The report is summarized by TRAN, the transaction ID.
- Nine fields are shown in the report, from TRAN in the left-most report column to TDWAIT in the right-most column.
- Statistical averages for RESPONSE, TDGET, TDPURGE, and so on, are reported.
- TDWAIT is reported in two columns. TIME shows the average I/O Wait elapsed time. COUNT shows the average number of times transactions waited for TD.
- EOR indicates where the report line ends. CICS PA automatically adjusts this for you to ensure that the fields you specify fit across the page.
- EOX indicates where the extract record ends. There is no restriction on the record length. You can move EOX to the bottom of the Report Form to include all available fields in the extract.

Exit (F3) from the Report Form to save it.

2.10.6 New Report Form

From the Report Forms list, you can create a new Report Form by entering the NEW command or selecting **File->New** from the action bar. The New Report Form screen is displayed as shown in Figure 2-30.

```
                              New Report Form
 Command ===> ____________________________________________________________

 Specify the name of the new Report Form and its options.

 Name  . . . . . . LIST2___

 APPLID  . . . . . SCSCPAA1   +          Version (VRM) . . 620
 MVS Image . . . . SC66____               S  Field Categories

 Form Type or Model . . _  1. List
                           2. List Extended (Sorted)
                           3. Summary
                           4. Model (specified below)

 Model  ____________________________________________________________
```

Specify the APPLID for user fields and EMPs. Otherwise specify VRM.

Select field categories from a list

Figure 2-30 New Report Form

Note: If you want to include user fields in your Report Form, you must specify the APPLID so that CICS PA can obtain the associated dictionary entries. Otherwise, simply specify the version (VRM) so that CICS PA can populate the form with the fields that are applicable to that release of CICS.

Report Form field categories

When creating a Report Form, you can select fields from *all* the CMF data fields or just from specific field categories.

On the New Report Form screen, enter line action `S` next to Field Categories to display the list of categories defined in CICS PA (Figure 2-31).

```
                          Field Categories            Row 1 to 14 of 25
Command ===> SELECT_________________________________ Scroll ===> PAGE

Select one or more Categories then press EXIT.

    Category    Description
.   AOR         Application-owning region
.   FOR         File-owning region
.   TOR         Terminal-owning region
.   DB2         DB2 data-owning region
.   IMS DBCTL   IMS DBCTL data-owning region
.   CROSSSYS    Cross-System User Fields
.   DFHAPPL     Application naming
.   DFHCBTS     Business Transaction Services
.   DFHCICS     CICS related task information
.   DFHDATA     Data processing
.   DFHDEST     Transient Data
.   DFHDOCH     Document Handler
.   DFHFEPI     Front End Programming Interface
.   DFHFILE     File Control
```

Figure 2-31 New Report Form: Selecting Field Categories

Enter the SELECT command to select all categories (the default), or line action `S` to select particular categories. Then press F3 (Exit).

When all options on the New Report Form screen are specified, press Enter to proceed with creating the Form. Edit the Report Form as required (see Figure 2-29 on page 47). Then exit to save the form.

Exit Report Forms and return to the Primary Option Menu (Figure 2-4 on page 29).

2.10.7 Using the Report Form in your report

To use the Report Forms in your report requests, again select option `2` (Report Sets) from the Primary Option Menu (Figure 2-4 on page 29). The list of Report Sets is displayed as shown in Figure 2-32. Enter line action `S` to resume editing your Report Set.

```
                                Report Sets                   Row 1 to 1 of 1
Command ===> ______________________________________________ Scroll ===> PAGE

Report Sets Data Set  . . .  xxxxxxxx.CICSPA.RSET

 /    Name             Description                Changed        ID
S__  REDBOOK  Demonstration Report Set         2003/10/17 17:59 xxxxxxxx
********************************* End of list *********************************
```

Figure 2-32 Report Sets list: Selecting a Report Set

A Report Set can include more than one report of each type. For example, you can request two List reports and three Summary reports.

Select the reports that you want to edit. Using the `S` line action as shown in Figure 2-33, we select the Performance List and Summary reports so that we can use our Report Forms.

```
EDIT                        Report Set - REDBOOK                      Row 1 of 31
Command ===> ____________________________________________________ Scroll ===> CSR

Description . . . Demonstration Report Set_________

Enter "/" to select action.

___            ** Reports **                            Active
     +  ___    Options                                    Yes
     +  ___    Selection Criteria                         No
     -  ___    Performance Reports                        Yes
               S__  List                                  Yes
               ___  List Extended                         No
               S__  Summary                               No
               ___  Totals                                No
               ___  Wait Analysis                         No
               ___  Cross-System Work                     No
               ___  Transaction Group                     No
```

Figure 2-33 Report Set: Selecting multiple reports to edit

Since we previously defined one List report, CICS PA presents the list of reports for you to review or update (Figure 2-34). You can add, delete, or exclude reports, or select reports to modify their options.

You can modify some options directly on this screen. We specify the Report Form now. You can either type the name, or press F4 (Prompt) to select a name from the list of available Report Forms for this type of report.

```
                        REDBOOK - Performance List Reports          Row 1 from 1
Command ===> ____________________________________________ Scroll ===> PAGE

        ---- System Selection ----                          Selection
/  Exc  APPLID +  Image +  Group +   Output     Form +      Criteria
_       SCSCPAA1  SC66____ ________  LIST0001   TDLST___      NO
******************************** End of list ******************************
```

Position the cursor and press Prompt (F4)

Figure 2-34 Reports list: Specifying the report format

This is all we need to do for the Performance List report. Now press F3 (Exit).

CICS PA continues to the next selected report, in this case the Summary report. This is our first Summary report, so we specify the report options (Figure 2-35).

```
                    REDBOOK - Performance Summary Report
 Command ===> ____________________________________________________________

System Selection:                        Report Output:
  APPLID . . ________  +                   DDname . . . . . . . . . SUMM0001
  Image  . . ________  +                   Print Lines per Page . . ___ (1-255)
  Group  . . ________  +

 Report Format:
  Form . . . TDSUM___  +
  Title  . . ____________________________________________________________
             ____________________________________________________________

 Processing Options:                              Reporting Options:
  Time Interval  . . . 00:01:00  (hh:mm:ss)        _  Exclude Totals

 Selection Criteria:
  _  Performance
```

Position the cursor and press Prompt (F4)

Figure 2-35 Specifying report options: Report format

As for the previous List report, the Report Form name is specified in the Form field. Again, you can specify the name of the Report Form, or press F4 (Prompt) to select one from a list of available Report Forms for this type of report.

Note the following points:

- Since we have not specified System Selection in this report, we are prompted at submit time to specify the desired system.
- The time interval applies when you want to summarize transaction activity over time. It is used when you specify a Summary Report Form that has one or both sort fields START or STOP included.

Exit to save your report request. The Performance Summary Reports list is displayed. We have completed specifying our Performance Summary reports, so press F3 (Exit) again. You now see that both the Performance List and Summary reports are active (Active Yes).

2.11 Filtering the report

You can specify selection criteria to filter the input records so that your CICS PA reports and extracts only include the data that you interested in. *Exception selection criteria* applies to the Exception reports and specifies the filtering options for CMF exception class records. *performance selection criteria* applies to all the other reports and extracts, except the System Logger report. It specifies filtering options for CMF performance class and transaction resource class records, and where applicable, DB2 and WebSphere MQ accounting records.

You can specify global selection criteria that applies to all the reports and extracts in a Report Set, or local selection criteria that applies to an individual report or extract. You can also specify selection criteria in Report Forms.

Notes:

- Report-level specifications take precedence over the global specifications.
- If a report has selection criteria defined and uses a Report Form that also has selection criteria defined, then records are selected for reporting only if they satisfy *both* criteria.

We select the global performance selection criteria as shown in Figure 2-36 so that we can filter both of our reports to see only the transactions that we are interested in.

```
EDIT                      Report Set - REDBOOK                    Row 1 of 34
Command ===> ____________________________________________ Scroll ===> CSR_

Description . . . Demonstration Report Set________

Enter "/" to select action.

___          ** Reports **                          Active
     -  ___  Options                                  Yes
             ___  Global                              Yes
     -  ___  Selection Criteria                       No
             S__  Performance                         No
             ___  Exception                           No
     -  ___  Performance Reports                      Yes
             ___  List                                Yes
             ___  List Extended                       No
             ___  Summary                             Yes
             ___  Totals                              No
```

Figure 2-36 Specifying global selection criteria

2.11.1 Selection criteria

Selection criteria enables you to specify report filtering options as shown in Figure 2-37.

```
                  REDBOOK - Performance Select Statement     Row 1 of 2 More: >
Command ===> ____________________________________________ Scroll ===> CSR_

         Active  --------------- Report Interval ----------------
   Inc   Start   -------- From ---------  ---------- To ---------
   Exc   Stop    DD/MM/YYYY  HH:MM:SS.TH  DD/MM/YYYY  HH:MM:SS.TH
_  ___   ______  __________  ___________  __________  ___________

-------------------------------------------------------------------------------

   Inc   Field              --- Value or Range ---   Object
/  Exc   Name +     Type    Value/From   To          List +
_  INC   TRAN____   ______  FIN*________ _________   ________
S  EXC   TDWAIT__   COUNT_  0__________ _________   ________
********************************** End of list ********************************
```

Figure 2-37 Selection criteria: Specifying a select statement

Note the following points:

- You can specify one or more report intervals. Transactions that either start, stop, or are active during the report intervals can be included (INC) or excluded (EXC) from the report.

- You can specify one or more fields and a single value, a masking pattern (for character fields), a range of values (for numeric fields), or an Object List (see 2.12, “Maintaining Object Lists” on page 56). Records with data fields that match the specified values can be included (INC) or excluded (EXC) from the report.

  For character fields, the masking characters % and * are allowed as well as the ability to select null fields by specifying ’ ’ (two single quotes).

  For numeric fields (Count, Time, or Clock), you can precede the From value with a comparison operator. For example, specify >=1 for a comparison of greater than or equal to 1. Allowed operators are:

  ```
  =   >   >=   <   <=
  ```

  Specify time values in seconds using a decimal point. Otherwise, milliseconds is assumed. For example, specify 1.12 seconds or 1120 milliseconds.

- You can scroll right by pressing F11 to see more columns of information about the fields such as length and dictionary definition.

You can specify most of the CMF fields in selection criteria. Enter line action `S` to select from a list of available fields or press F4 (Prompt) on the Field Name. Figure 2-38 shows the field selection list.

```
                 Select a Performance Field   Row 208 of 236 More: >
Command ===> f 'transient d'_____________________ Scroll ===> PAGE

    Field
/   Name      Description
_   TDGET     Transient data GET requests
_   TDPURGE   Transient data PURGE requests
h   TDPUT     Transient data PUT requests
_   TDTOTAL   Transient data Total requests
s   TDWAIT    VSAM transient data I/O wait time
_   TERM      Terminal ID
_   TERMCNNM  Terminal session Connection name
_   TRAN      Transaction identifier
_   TRANPRTY  Transaction priority
_   TSGET     Temporary Storage GET requests
_   TSPUTAUX  Auxiliary TS PUT requests
```

Figure 2-38 Selecting a performance field

Note the following points:

- You can enter a FIND command to locate a character string in the display. Then use F5 or the RFIND command to locate the next occurrence.
- You can enter line action `H` (Help) to obtain a detailed description of a field.
- You can scroll right by pressing F11 to view more columns of information about the fields (Dictionary definition).

We will the field TDWAIT, and then type line action `S` (Select) and press Enter to insert this field into the select statement.

Complete the select statement to ensure that we only report our Finance transactions (transaction IDs that start with FIN) that waited for at least one Transient Data request.

Press F3 (Exit) to save your select statement. Figure 2-39 shows the select statements (rows) that define your selection criteria.

```
                    REDBOOK - Performance Selection Criteria         Row 1 from 1
Command ===> ____________________________________________ Scroll ===> CSR_

/ Exc Description
_     TRAN FIN*;Excl TDWAIT COUNT 0;
--------------------------------------------------------------------------------
********************************* End of list *********************************
```

Figure 2-39 Select statements that define the selection criteria

Selection criteria is defined by one or more select statements. You can add (A), delete (D), or exclude (X) select statements, or select (S) any to modify the specification.

Our specification is complete, so press F3 (exit) to save the selection criteria. Observe in Figure 2-40 that the global performance selection criteria is now active. Enter the RUN command to run the Report Set.

```
EDIT                        Report Set - REDBOOK                    Row 1 of 34
Command ===> RUN_____________________________________________ Scroll ===> CSR

Description . . . Demonstration Report Set________

Enter "/" to select action.

___             ** Reports **                          Active
     -  ___     Options                                  Yes
                ___  Global                              Yes
     -  ___     Selection Criteria                       Yes
                ___  Performance                         Yes
                ___  Exception                           No
     -  ___     Performance Reports                      Yes
                ___  List                                Yes
                ___  List Extended                       No
                ___  Summary                             Yes
                ___  Totals                              No
```

Figure 2-40 Running the Report Set with two reports and global selection criteria

2.11.2 Run Report Set

When the Run Report Set screen is displayed, review the run-time options and press Enter. This time the message `System not specified` is displayed. Press Help (F1) to display the long error message:

```
CPA1028E  Report Set JCL generation failed. System or Group not specified
CPA1030E  System=N/A, Report=Performance Summary, Output=SUMM0001.
```

This indicates that CICS PA needs to know on which system to run the Summary report.

CICS PA positions the cursor at the System Selection CICS APPLID field. You simply need to press F4 (Prompt) to display the list of available Systems. Select the desired System (SCSCPAA1/SC66) and press Enter to insert into your System Selection.

The Run Report Set specification is complete, so press Enter to proceed with JCL generation.

2.11.3 JCL generation

The Report Set JCL is similar to the JCL in Figure 2-22 on page 43. The difference is that additional commands are generated to honor the selection criteria and report forms that you since specified. This is shown in Figure 2-41.

Make any necessary changes. Then type SUBMIT (or SUB) on the command line and press Enter to submit the job.

```
. . .
===> SUB_____________________________________________ Scroll ===> PAGE
. . .
//* Command Input
//SYSIN DD *
* Report Set =REDBOOK
         CICSPA IN(SMFIN001),
                . . .
                SELECT(PERFORMANCE(                    Global selection criteria
                INC(TRAN(FIN*)),
                EXC(TDWAIT(COUNT(0))))),
            LIST(OUTPUT(LIST0001),                     Performance List report
                FIELDS(TRAN,
                       USERID,
                       TASKNO,
                       STOP(TIMET),
                       TDGET,                          Report Form TDLST
                       TDPURGE,
                       TDPUT,
                       TDTOTAL,
                       TDWAIT(TIME),
                       TDWAIT(COUNT)),
                TITLE1(
 'Transaction Transient Data Activity - Detail                    ')),
            SUMMARY(OUTPUT(SUMM0001),                  Performance Summary report
                . . .
                BY(TRAN),
                FIELDS(TRAN,
                       TASKCNT,
                       RESPONSE(AVE),
                       TDGET(AVE),                     Report Form TDSUM
                       TDPURGE(AVE),
                       TDPUT(AVE),
                       TDTOTAL(AVE),
                       TDWAIT(TIME(AVE)),
                       TDWAIT(COUNT(AVE))),
                TITLE1(
 'Transaction Transient Data Activity - Summary                   ')
/*
```

Figure 2-41 Report Set JCL: Showing the selection criteria and report forms

After you submit the job, press Exit until you return to the CICS PA Primary Option Menu (Figure 2-4 on page 29).

2.12 Maintaining Object Lists

Let us now extend our use of selection criteria by employing an Object List. Object Lists enable you to define a group of related values once. Then you simply refer to the Object List name when specifying the record selection criteria in your Report Sets.

To define Object Lists for use in selection criteria, select option 4 from the Primary Option Menu (Figure 2-4 on page 29).

2.12.1 Creating the Object Lists data set

You are prompted to create the Object Lists data set. This is the data set in which CICS PA saves your report and extract requests.

Press Enter to create the Object Lists data set. Otherwise, cancel and from the Primary Option Menu (Figure 2-4 on page 29), select option 0.5 (option 0 and then option 5) to specify the data set name of your choice.

2.12.2 Object Lists

The Object Lists facility is used to create, modify, and view Object Lists. An Object List defines a list of field values that can be used when specifying record selection criteria, for example, to define all the transaction IDs that belong to a particular application system.

Object Lists enable you to define a group of related values once. Then you simply refer to the Object List name when specifying the record selection criteria in a Report Set. You can define your Object Lists hierarchically to eliminate duplication and improve the integrity of lists.

The initial list of Object Lists is empty. Use the NEW command to create your first Object List. An Object List is a member in the Object Lists data set.

2.12.3 Edit Object List

You can now start editing your Object List. The example in Figure 2-42 shows a list of long running CICS internal transactions that you may commonly want to exclude from your reporting. For other examples of Object Lists, see Figure 13-44 on page 309 and Figure 18-6 on page 391.

In any row, you can specify:

- A single value
- A pattern using masking characters % and * (character fields only)
- A range (numeric fields only)
- An Object List (sublist)

You can specify any number of values in an Object List. You can also specify any number of Object Lists as sublists.

The order of entries in the list is of no consequence to CICS PA reporting.

```
EDIT                          Object List - CICSEXCL          Row 1 to 16 of 16
Command ===> ____________________________________________ Scroll ===> CSR_

Description  . . . . CICS/CPSM trans to be excluded__

Specify the Object List values:

/   1st Value   2nd Value   Sublist
_   CFQR_____   _________   ________
_   CFQS_____   _________   ________
_   CSHQ_____   _________   ________
_   CSNC_____   _________   ________
_   CSNE_____   _________   ________
_   CSOL_____   _________   ________
_   CSSY_____   _________   ________
_   CSTP_____   _________   ________
_   CSZI_____   _________   ________
_   COIE_____   _________   ________
_   COIO_____   _________   ________
_   CONL_____   _________   ________
_   CONM_____   _________   ________
_   COHT_____   _________   ________
_   CSKL_____   _________   ________
_   CKTI_____   _________   ________
******************************** End of list ********************************
```

Figure 2-42 Editing an Object List: CICS internal transactions

When your Object List is complete, exit to save it and return to the Primary Option Menu (Figure 2-4 on page 29).

2.12.4 Using the Object List in your selection criteria

To use the Object List in your selection criteria, follow these steps:

1. From the Primary Option Menu, select option 2 (Report Sets).
2. From the Report Sets list, select the Report Set that you want to edit.
3. From the Edit Report Set screen, select the Global selection criteria. Or, instead you may specify selection criteria for individual reports.
4. Specify the name of your Object List, which is highlighted in Figure 2-43. You can type the name directly, or press F4 (Prompt) to select from a list of available Object Lists.
5. Exit to save your selection criteria.
6. Run the Report Set or report as appropriate.

```
                    REDBOOK - Performance Select Statement     Row 1 of 1 More: >
 Command ===> ____________________________________________ Scroll ===> CSR_

          Active  --------------- Report Interval ----------------
    Inc   Start   -------- From ---------  ---------- To ---------
    Exc   Stop    DD/MM/YYYY  HH:MM:SS.TH  DD/MM/YYYY  HH:MM:SS.TH
 _  ___   ______  __________  ___________  __________  ___________

 ------------------------------------------------------------------------------

    Inc   Field              --- Value or Range ---   Object
 /  Exc   Name +     Type    Value/From   To          List +
 _  EXC   TRAN____   ______  ___________ _________    CICSEXCL
********************************* End of list ********************************
```

Figure 2-43 Selection criteria: Specifying an Object List in a select statement

This completes the introduction to CICS PA. To learn about the many additional features of CICS PA, refer to:

- Part 2, “CICS Performance Analyzer in action” on page 127, where the screen is used in particular scenarios
- *CICS Performance Analyzer for z/OS User’s Guide*, SC34-6307
- The CICS PA online Help and Tutorial

3

Reports and extracts

CICS Performance Analyzer (PA) provides a comprehensive suite of reports and extracts to help you analyze and tune the performance of your CICS systems. This chapter describes the purpose of each report and extract, the options that you can specify to tailor the output, and examples for you to see. For detailed descriptions of all the reports and extracts, refer to the *CICS Performance Analyzer for z/OS Report Reference*, SC34-6308.

To see how to use different tools to analyze the extract data produced by the CICS PA Export facility, refer to Chapter 4, “Processing extracts” on page 107.

Part 2 of this book draws it all together. It discusses a variety of scenarios that employ many of the CICS PA reports and extracts. It also describes how to use the CICS PA Historical Database (HDB) facility to maintain your CICS performance data.

3.1 CICS PA Report Set

A Report Set contains your report and extract requests. The CICS PA screen presents the Report Set in a tree structure, as shown in Figure 3-1, where the available reports and extracts are grouped by category.

```
EDIT                      Report Set - REDBOOK                    Row 1 of 34
Command ===>                                                  Scroll ===> CSR

Description . . . CICS PA Report Set

Enter "/" to select action.

___          ** Reports **                                  Active
     -  ___  Options                                         No
             ___  Global                                     No
     -  ___  Selection Criteria                              No
             ___  Performance                                No
             ___  Exception                                  No
     -  ___  Performance Reports                             No
             ___  List                                       No
             ___  List Extended                              No
             ___  Summary                                    No
             ___  Totals                                     No
             ___  Wait Analysis                              No
             ___  Cross-System Work                          No
             ___  Transaction Group                          No
             ___  BTS                                        No
             ___  Workload Activity                          No
     -  ___  Exception Reports                               No
             ___  List                                       No
             ___  Summary                                    No
     -  ___  Transaction Resource Usage Reports              No
             ___  File Usage Summary                         No
             ___  Temporary Storage Usage Summary            No
             ___  Transaction Resource Usage List            No
     -  ___  Subsystem Reports                               No
             ___  DB2                                        No
             ___  WebSphere MQ                               No
     -  ___  System Reports                                  No
             ___  System Logger                              No
     -  ___  Performance Graphs                              No
             ___  Transaction Rate                           No
             ___  Transaction Response Time                  No
     -  ___  Extracts                                        No
             ___  Cross-System Work                          No
             ___  Export                                     No
             ___  Record Selection                           No
             ** End of Reports **
```

Figure 3-1 CICS PA Report Set showing available reports and extracts

This chapter discusses the reports and extracts in the same sequence as they are presented in the screen.

Performance reports

The Performance reports are produced from CICS Monitoring Facility (CMF) performance class data. The reports in this category are:

- Performance List report

  This is a detailed listing of the CMF performance class data.

- Performance List Extended report

  This report provides a sorted, detailed listing of the CMF performance class data.

- Performance Summary report

  This report summarizes the CMF performance class data.

- Performance Totals report

  This report provides totals and averages of the CMF performance class data.

- Wait Analysis report

  This report breaks down wait activity by transaction ID (or other ordering fields). You can see at a glance which CICS resources are causing your transactions to be suspended. This report can help you to quickly identify the possible source of a performance response time problem.

- Cross-System Work report

  This report is a detailed listing of segments of work performed by a single CICS system or multiple CICS systems via transaction routing, function shipping, or distributed transaction processing on behalf of a single network unit-of-work ID. It provides a consolidated report that shows the complete transaction activity across connected systems. The format can be tailored to produce the Cross-System Work Extended report.

- Transaction Group report

  This report offers a detailed listing of segments of work performed by the same or different CICS systems on behalf of a single transaction group ID.

- BTS report

  This is a detailed listing that shows the correlation of the transactions performed by the same or different CICS systems on behalf of a single CICS Business Transaction Services (BTS) process.

- Workload Activity report

  This report provides a transactions response time analysis by MVS Workload Manager (WLM) service and report class. You can use this in conjunction with the z/OS Resource Measurement Facility™ (RMF) workload activity reports to understand from a CICS perspective how well your CICS transactions are meeting their response time goals. The Workload Activity List report is a cross-system report that correlates CMF performance class data from single or multiple CICS systems for each network unit of work. Importantly, this report ties multiregion operation (MRO) and function shipping tasks to their originating task so that their impact on response time can be assessed. The Workload Activity Summary report summarizes response time by WLM service and report classes.

Exception reports

Exception reports are produced from CMF exception class data. The reports in this category are:

- **Exception List**: A detailed listing of the CMF exception class data
- **Exception Summary**: A summary of the CMF exception class data

Transaction Resource Usage reports

The Transaction Resource Usage reports are produced from CMF performance class and transaction resource class data. Currently, file and temporary storage usage are the only types of transaction resource data available. The reports in this category are:

- File Usage Summary report

  This report provides a detailed analysis of CMF transaction resource class data for files. The Transaction File Usage Summary report summarizes file usage by transaction ID. For each transaction ID, it gives transaction identification and file control statistics followed by a breakdown of file usage for each file used by the transaction. The File Usage Summary report summarizes file activity. For each file, it gives a breakdown of file usage by transaction ID.

- Temporary Storage Usage Summary report

  This report provides a detailed analysis of CMF transaction resource class data for temporary storage queues. The Transaction Temporary Storage Usage Summary report summarizes temporary storage usage by transaction ID. For each transaction ID, it gives transaction identification and temporary storage control statistics followed by a breakdown of temporary storage usage for each temporary storage queue used by the transaction. The Temporary Storage Usage Summary report summarizes temporary storage activity. For each temporary storage queue, it breaks down temporary storage usage by transaction ID.

- Transaction Resource Usage List report

  This report provides a detailed list of CMF transaction resource class data. The records are reported in the sequence that they appear in the system management facility (SMF) file. The report gives transaction information together with statistics of file storage usage, temporary storage usage, or both by the transaction.

Subsystem reports

The Subsystem reports are produced from subsystem accounting data stored in SMF files. The reports in this category are:

- DB2 report

  This report correlates CICS CMF records and DB2 Accounting (SMF 101) records by network unit of work to produce a consolidated and detailed view of DB2 usage by your CICS systems. The DB2 report enables you to view CICS and DB2 resource usage statistics together in a single report. The DB2 List report shows detailed information of DB2 activity for each transaction. The DB2 Summary reports summarize DB2 activity by transaction.

- The WebSphere MQ report

  Processes WebSphere MQ SMF accounting (SMF 116) records to produce a detailed view of WebSphere MQ usage by your CICS systems. The WebSphere MQ List reports display, depending on the WebSphere MQ accounting traces that are active, details about Transactions, WebSphere MQ Queues that were referenced, WebSphere MQ global (not transaction-specific or queue-specific) statistics and WebSphere queue-specific commands issued by transactions. These can be aggregated by transaction ID, queue name, or both.

System reports

The System reports are produced from system data stored in SMF files. The report in this category is the System Logger report.

The System Logger report processes MVS System Logger (SMF 88) records. It does not process CMF data and the selection criteria does not apply. The report provides information about the System Logger log streams and coupling facility structures that are used by CICS Transaction Server (TS) for logging, recovery, and backout operations. The report can assist with measuring the effects of tuning changes and identifying logstream or structure performance problems. The System Logger List report shows information about logstream writes, deletes, and events, as well as Structure Alter events for each SMF recording interval.

The System Logger Summary report summarizes logstream and structure statistics so you can measure the System Logger performance over a longer period of time. These reports, when used in conjunction with the CICS Logger reports produced from the standard CICS statistics reporting utilities, provide a comprehensive analysis of the logstream activity for all your CICS systems.

Performance Graph reports

Performance Graph reports are produced from CMF performance class data in graphical format. The reports in this category are:

- Transaction Rate Graph report

  This report is a set of two graphs that illustrate the average response time and the number of transactions that completed in a specified time interval.

- Transaction Response Time Graph report

  This report shows a set of two graphs that illustrate the average and maximum response time for all transactions that completed in a specified time interval.

Extracts

Performance extracts produce extract data sets from CMF performance class data and create extract data sets in a format that is appropriate to their function. A Recap report is always produced to summarize the extract results. The extracts in this category are:

- Cross-System Work extract

  This data set is useful for cross-system analysis. CICS PA allows you to merge CMF performance class data from segments of work performed by the same or different CICS systems via transaction routing, function shipping, or distributed transaction processing on behalf of a single network unit-of-work ID. You can use this Cross-System Work data set as input to CICS PA Performance reports such as the List, Summary, and Totals reports to monitor the total amount of resources used by a transaction within a single or across multiple CICS systems.

- Export extract

  This data set is a subset of the CMF performance class data, extracted and formatted as a delimited text file. This data file can then be imported into PC spreadsheet or database tools such as Lotus 1-2-3 or Lotus Approach for further reporting and analysis. The extract records have a default format that includes all the clock fields. Or you can tailor the format like the Performance List or Performance Summary reports.

- Record Selection extract

  This data set contains a small extract file with only the records that are of interest to you. The Record Selection Extract filters large SMF files, which can then be used as input to CICS PA. The reduced data volume enables more efficient reporting and analysis. The following record types are processed by this extract:

  - SMF 110 CMF performance records
  - SMF 101 DB2 accounting records, if requested
  - SMF 116 WebSphere MQ accounting records, if requested

3.2 CICS PA commands

CICS PA provides both an Interactive System Productivity Facility (ISPF) screen and a command interface. The CICS PA screen generates the batch job and commands to produce reports and extracts. CICS PA allows you to edit the generated JCL and commands before you submit a job.

The general format of the command as it appears in the SYSIN DD statement of your job is:

```
CICSPA operand(suboperand),...
```

3.2.1 Commands for reports and extracts

The operands to request the CICS PA reports and extracts are:

LIST	Performance List report
LISTX	Performance List Extended report
SUMMARY	Performance Summary report
TOTAL	Performance Totals report
WAITANAL	Performance Wait Analysis report
CROSS	Cross-System Work report and extract
TRANGROUP	Transaction Group report
BTS	CICS Business Transaction Services report
WORKLOAD	Workload Activity report
LISTEXC	Exception List report
SUMEXC	Exception Summary report
RESUSAGE(FILESUM)	File Usage Summary report
RESUSAGE(TSSUM)	Temporary Storage Usage Summary report
RESUSAGE(TRANLIST)	Transaction Resource Usage List report
DB2	DB2 report
MQ	WebSphere MQ report
LOGGER	System Logger report
GRAPH(TRANRATE)	Transaction Rate Graph report
GRAPH(RESPONSE)	Transaction Response Time Graph report
EXPORT	Exported Performance Data extract
RECSEL	Record Selection extract

You can specify global operands to apply to all reports and extracts. You can also specify report-specific operands to tailor individual reports and extracts to your particular needs.

3.2.2 Commands for HDB processing

The HDB facility is driven from the CICS PA screen. It has three associated batch processes. The operands are:

- **HDB(LOAD(hdbname))**: Load HDB container data sets with selected SMF performance data

- **HDB(REPORT(hdbname))**: HDB report
- **HDB(HKEEP)**: HDB Housekeeping

3.3 Performance reports

The reports in this category are:

- Performance List report
- Performance List Extended report
- Performance Summary report
- Performance Totals report
- Wait Analysis report
- Cross-System Work report
- Transaction Group report
- BTS report
- Workload Activity report

3.3.1 Performance List report

The Performance List report provides a detailed list of the CMF performance class records. Figure 3-2 shows the options for this report.

```
                    REDBOOK - Performance List Report
 Command ===> ____________________________________________________________

System Selection:                          Report Output:
  APPLID . . SCSCPAA5  +                     DDname . . . . . . . . . LIST0001
  Image  . . ________  +                     Print Lines per Page . . ___ (1-255)
  Group  . . ________  +

 Report Format:
  Form . . . FCLIST__  +
  Title  . . Transaction File Control Usage_____________________________
             ____________________________________________________________

 Selection Criteria:
  S  Performance  *
```

Show File Control (FC) request counts and elapsed times

Include only transaction IDs matching C* with a response time greater than 0.5 seconds

Figure 3-2 Performance List report options

Default report format

Observe the columns of data in the Performance List report in Figure 3-3. This example shows the default format of the report when a Report Form *is not* specified. It details performance-related information for each transaction.

```
V1R3M0                                                CICS Performance Analyzer
                                                          Performance List
 LIST0001 Printed at  9:06:18 10/28/2002    Data from 11:10:51 10/27/2002                    APPLID SCSCPAA5 Page   3

  Tran SC Term Userid RSID Program  TaskNo Stop         Response Dispatch User CPU  Suspend DispWait  FC Wait   FCAMRq  IR Wait
                                          Time           Time     Time     Time     Time     Time     Time               Time
  CSAC TO SAMA CICSLS1      DFHACP       36 11:11:17.120    .5150    .0011    .0011    .5139    .0001    .0000        0    .0000
  CSTE U       CICSLS1      DFHTACP      37 11:11:17.231    .1420    .1381    .0126    .0039    .0037    .0000        0    .0000
  CATA U       CICSLS1      DFHZATA      38 11:11:27.342    .0537    .0394    .0121    .0143    .0003    .0000        0    .0000
  CQRY S  S208 CICSLS1      DFHQRY       39 11:11:28.453    .3476    .0451    .0048    .3025    .0038    .0000        0    .0000
  CQRY S  S208 CICSLS1      DFHQRY       39 11:11:28.564    .4147    .0012    .0008    .4136    .0000    .0000        0    .0000
  CESN S  S208 CICSLS1      DFHSNP       40 11:11:28.675    .0806    .0770    .0102    .0036    .0036    .0000        0    .0000
  CATA U       CICSLS1      DFHZATA      41 11:11:28.786    .0309    .0048    .0045    .0261    .0003    .0000        0    .0000
  CQRY S  S23D CICSLS1      DFHQRY       42 11:11:29.897    .2951    .0013    .0008    .2938    .0000    .0000        0    .0000
  CQRY S  S23D CICSLS1      DFHQRY       42 11:11:29.908    .4037    .0012    .0008    .4024    .0000    .0000        0    .0000
  CESN S  S23D CICSLS1      DFHSNP       43 11:11:29.099    .0030    .0029    .0020    .0001    .0000    .0000        0    .0000
  CESN TP S208 CICSLS1      DFHSNP       44 11:11:35.110    .0284    .0280    .0147    .0004    .0003    .0000        0    .0000
  CESN TP S23D CICSLS1      DFHSNP       45 11:11:41.221    .0203    .0197    .0114    .0006    .0006    .0000        0    .000
```

Figure 3-3 Performance List default report

Report tailoring

You can easily change the format of the Performance List report by using a Report Form to display the performance related data in which you are interested. Many sample Report Forms of type LIST are provided with CICS PA for this purpose. The EOR marker in the Report Form defines the end of the print line. It must not exceed the maximum page width of 132. For more information about how to use Report Forms, see 2.10, “Tailoring report formats” on page 44.

Figure 3-4 shows how you can tailor the Performance List report using a Report Form. This example shows File Request activity for each transaction. Notice the File Request counts on the right side of the report.

```
V1R3M0                                                CICS Performance Analyzer
                                                          Performance List
LIST0001 Printed at 10:32:09  10/28/2002    Data from 11:17:21  10/27/2002                    APPLID SCSCPAA5 Page    3
Transaction File Control Usage
 Tran Userid   Stop          Response Dispatch User CPU  FC Wait   FCAMRq    FCADD FCBROWSE FCDELETE    FCGET    FCPUT FC Total
               Time            Time     Time     Time     Time
 TRUE EUGENED  11:17:23.394   2.0973    .0014    .0010    .0000        0        0        0        0        0        0        0
 RED1 EUGENED  11:17:32.050    .5333    .0055    .0040    .0000        0        0        0        0        0        0        0
 STOC EUGENED  11:17:32.053    .5145    .0033    .0030    .0000        0        0        0        0        0        0        0
 SALE EUGENED  11:17:32.054    .5675    .0263    .0124    .0493       28        6        0        0        8        4       22
 DEL1 EUGENED  11:17:33.286   1.2323    .0057    .0051    .0099       15        1        0        1        3        1        7
 SALE EUGENED  11:17:33.309   1.2198    .0086    .0047    .0130       10        0        0        1        4        2        9
 STAT CICSLS   11:17:35.081   1.8129    .0178    .0028    .0000        0        0        0        0        0        0        0
```

Figure 3-4 Performance List: Tailored report showing File Control requests

Example 3-1 shows how you can use the FIELDS operand to tailor the Performance List report.

Example 3-1 Using commands to tailor the Performance List report

```
CICSPA LIST(FIELDS(TRAN,DBCTL(PSBNAME),
                   RESPONSE,CPU,IMSREQCT,IMSWAIT(TIME,COUNT),
                   DBCTL(SCHTELAP,
                         POOLWAIT,
                         INTCWAIT,
                         DBIOELAP,
                         PILOCKEL,
                         THREDCPU,
```

```
                                DLICALLS,
                                DBIOCALL)),
                TITLE1('Analysis of Transaction IMS DBCTL Usage'))
```

Figure 3-5 shows the resulting report with transaction database control (DBCTL) usage.

```
V1R3M0                                                CICS Performance Analyzer
                                                           Performance List
LIST0001 Printed at 11:33:27  9/11/2001    Data from 12:17:43  2/04/1999                        APPLID IYK2Z1V3      Page       9
Analysis of Transaction IMS DBCTL Usage
 Tran PSB      Response User CPU IMS Reqs IMS Wait IMS Wait SchedElp   PoolWt    IC WT   DBIOEl PILockEl ThredCPU      DLI     DBIO
                   Time     Time               Time    Count     Time     Time     Time     Time     Time     Time    Calls    Calls
 DLI1 PSB001     5.9288   1.5556        3   1.5556        5   1.0004    .0000    .0000    .0023    .0000    .0041        2        1
 DLI2 PSB001     3.5302    .2359        3    .2359        5    .0010    .0000    .0000    .0017    .0000    .0289        2        1
 DLI3 PSB001     3.4382    .5010        3    .5010        5    .0010    .0000    .0000    .0018    .0000    .0289        2        1
 DLI4 PSB001     1.0711    .7553        2    .7553        4    .0024    .0000    .0000    .0000    .0000    .0299        1        0
 DLI5 PSB001      .2516    .2319        2    .2319        4    .0010    .0000    .0000    .0000    .0000    .0318        1        0
 DLI6 PSB001      .3658    .3658        2    .3478        4    .0011    .0000    .0000    .0000    .0000    .0327        1        0
 DLI2 PSB001    91.8213   1.8717        2  14.8960        4    .0010    .0000    .0000    .0000    .0000    .0286        1        0
 DLI3 PSB001    156.501   1.9866        2  18.3825        4    .0055    .0000    .0000    .0019    .0000    .0298        1        1
 DLI5 PSB001    233.355   1.9771        2  21.3535        4    .0049    .0000    .0000    .0000    .0000    .0293        1        0
 DLI1 PSB001    95.2870   1.9511        2  21.4463        4    .0050    .0000    .0000    .0018    .0000    .0288        1        1
```

Figure 3-5 Performance List report showing DBCTL activity

Tip: IMS DBCTL users can collect DBCTL statistics in CMF performance class records by including the DFH$MCTD copy member in the monitoring control table (MCT) definition.

The DBCTL User Field is 256 bytes long and contains a wealth of IMS information that can be requested in your reports. This information includes:

- PSB name
- Various IMS DBCTL internal elapsed times
- Various IMS DBCTL CPU times
- DLI and database call counts, including DEDB statistics
- Enqueue statistics

List Export

You can also write your Performance List report to an extract data set. You do this by using the Export facility with a LIST or LISTX Report Form to define the record layout. When you use LISTX, the sort is ignored. The EOX marker in the Report Form defines the end of the extract record. There is no limit on the record length, so you can export all available fields or a selection. For more information, see 3.9.2, “Export extract” on page 101.

3.3.2 Performance List Extended report

The Performance List Extended report is similar to the Performance List report but allows you to sort the data. For example, you can specify:

- The transactions that have the longest response time
- The transactions that use the most CPU time
- The transactions that performed the most File requests

Figure 3-6 shows the report options.

```
                    REDBOOK - Performance List Extended Report
Command ===> ____________________________________________________________

Specify report details and press Enter to perform validation.

System Selection:                          Report Output:
 APPLID . . SCSCPAA5  +                     DDname . . . . . . . . . LSTX0001
 Image  . . ________  +                     Print Lines per Page . . ___ (1-255)
 Group  . . ________  +

Report Format:
 Form . . . BADDB2__  +
 Title  . . ________________________________________________________________
            ________________________________________________________________

Selection Criteria:
 _  Performance
```

Show the 20 worst response times for each transaction ID

Figure 3-6 Performance List Extended report options

Default report format

In Figure 3-7, observe the columns of data in the Performance List Extended report. This shows the default format of the report when a Report Form *is not* specified. It details performance-related information for each transaction, sorted by transaction ID.

```
V1R3M0                                                CICS Performance Analyzer
                                                      Performance List Extended
LSTX0001 Printed at 16:15:19  11/05/2002 Data from 11:10:29  11/04/2002 to 11:33:51  11/04/2002                          Page    2

 Tran SC Userid   RSID Program    TaskNo Stop          Response Dispatch User CPU  Suspend DispWait  FC Wait   FCAMRq  IR Wait
                                         Time            Time     Time     Time     Time     Time     Time              Time
 AADD TO EUGENED       DFHSAALL      136 11:19:42.186    .0011    .0010    .0010    .0001    .0000    .0000        0    .0000
 AADD TO EUGENED       DFHSAALL      137 11:19:46.796    .0022    .0021    .0012    .0001    .0000    .0000        0    .0000
 AADD TP EUGENED       DFHSAALL      138 11:19:53.578    .0023    .0022    .0013    .0001    .0000    .0000        0    .0000
 AADD TO EUGENED       DFHSAALL      183 11:21:29.153    .0022    .0022    .0012    .0001    .0000    .0000        0    .0000
 AADD TP EUGENED       DFHSAALL      184 11:21:36.124    .0023    .0022    .0013    .0001    .0000    .0000        0    .0000
 ABRW TO CICSLS        DFHSABRW      206 11:24:12.124    .0052    .0021    .0021    .0031    .0000    .0000        0    .0030
 ABRW TO EUGENED       DFHSABRW       53 11:11:57.251    .5819    .0783    .0121    .5037    .0127    .0000        0    .4908
 ABRW TP EUGENED       DFHSABRW       59 11:12:55.460    .0070    .0034    .0029    .0036    .0000    .0000        0    .0036
 ABRW TP EUGENED       DFHSABRW       61 11:12:58.275    .0080    .0028    .0024    .0052    .0000    .0000        0    .0051
 ABRW TP EUGENED       DFHSABRW       62 11:12:59.332    .0064    .0027    .0023    .0036    .0000    .0000        0    .0036
 ABRW TP EUGENED       DFHSABRW       63 11:13:02.370    .0018    .0017    .0014    .0001    .0000    .0000        0    .0000
 ABRW TO EUGENED       DFH£ABRW      109 11:19:22.883    .0071    .0040    .0027    .0030    .0000    .0000        0    .0030
```

Figure 3-7 Performance List Extended default report format

Report tailoring

You can easily change the format of the Performance List Extended report by using a Report Form to include information to meet your specific reporting and analysis requirements. You can also tailor the sorting criteria by specifying up to three sort fields (ascending or descending) with (optionally) a limit on one. Many sample Report Forms of type LISTX are provided with CICS PA for this purpose. For more information about how to use Report Forms, see 2.10, “Tailoring report formats” on page 44.

Figure 3-8 shows how you can tailor the Performance List Extended report using a Report Form like the example in Figure 3-9. This example highlights bad response times for transactions that use DB2. This enables you to quickly analyze response time problems by identifying:

- The worst performing transactions
- The CICS internal and external resource that may have caused the problem

```
V1R3M0                                    CICS Performance Analyzer
                                           Performance List Extended
LSTX0001 Printed at  9:19:43  11/06/2002 Data from 12:10:51  11/04/2002 to 12:34:13  11/04/2002            Page  1
Bad DB2 transaction response time
 Tran Response Userid   Program     Stop      Dispatch User CPU  Suspend DispWait DB2ConWt DB2ThdWT   DB2 DB2SQLWt
          Time                     Time          Time     Time     Time     Time     Time     Time  Reqs     Time
 CRD4  114.574 JOHN     CORD04P  12:26:25.765   4.9961   4.6084  109.578   3.7039    .0000  90.2326  9178  19.3442
 CRD4  95.2259 STEVE    CORD04P  12:26:04.243   5.1529   4.6320  90.0730   9.0971    .0000    .0000  8436  90.0727
 CRD4  94.8672 CHRIS    CORD04P  12:26:04.954   5.0842   4.6390  89.7829   8.0275    .0000    .0000  8574  89.7826
 CRD4  93.6422 SHIRLEY  CORD04P  12:26:01.425   5.1434   4.6228  88.4988   8.7084    .0000    .0000  8465  88.4984
 CRD4  81.5987 DAVID    CORD04P  12:22:21.938   4.9596   4.5885  76.6391   6.4075    .0000    .0000  8335  76.6388
 CRD4  81.2668 KATH     CORD04P  12:22:22.820   4.9766   4.5806  76.2901   6.3358    .0000    .0000  9346  76.2898
 CRD4  80.0224 MIKE     CORD04P  12:22:18.958   5.2067   4.6592  74.8158   6.0739    .0000    .0000  8690  74.8154
 CRD4  38.3645 JAMES    CORD04P  12:16:12.420   5.0326   4.6100  33.3319   5.4501    .0000    .0000  9124  33.3315
 . . .
 CRD5  102.066 JOHN     CORD05P  12:22:44.565   4.8183   4.4576  97.2478   4.4576    .0000  76.4557  6573  20.7892
 CRD5  36.3721 CHRIS    CORD05P  12:16:22.814   5.0605   4.5812  31.3116   4.4883    .0000    .0000  9102  31.3103
 CRD5  23.2860 DAVID    CORD05P  12:12:04.661   5.4456   4.6209  17.8404   3.9595    .0000    .0000  8221  17.7935
 CRD5   1.0671 SHIRLEY  CORD05P  11:49:21.077    .4447    .0405    .6223    .0037    .0000    .0000     1    .6192
 CRD5    .6346 MIKE     CORD05P  11:43:43.859    .1315    .0443    .5032    .3209    .0000    .0000     1    .1821
 . . .
```

Figure 3-8 Performance List Extended tailored report: The worst performing DB2 transactions

```
                        EDIT LISTX Report Form - BADDB2          Row 1 to 15 of 15
Command ===> ____________________________________________________ Scroll ===> PAGE

Description  . . . . Bad DB2 transaction response____   Version (VRM): 620

Selection Criteria:
 _  Performance

   Field
/  Name +    S Type    Limit     Description
__ TRAN____  A _______ ________  Transaction identifier
__ RESPONSE  D _______ 20______  Transaction response time
__ USERID__  * _______ ________  User ID
__ PROGRAM_  _ _______ ________  Program name
__ STOP____  * TIMET__ ________  Task stop time
__ DISPATCH  * TIME___ ________  Dispatch time
__ CPU_____  * TIME___ ________  CPU time
__ SUSPEND_  * TIME___ ________  Suspend time
__ DISPWAIT  * TIME___ ________  Redispatch wait time
__ DB2CONWT  _ TIME___ ________  DB2 Connection wait time
__ DB2RDYQW  _ TIME___ ________  DB2 Thread wait time
__ DB2REQCT  _ _______ ________  DB2 requests
__ DB2WAIT_  _ TIME___ ________  DB2 SQL/IFI wait time
__ EOR_____  _ _______ ________  ---------------- End of Report --------------
__ EOX_____  _ _______ ________  ---------------- End of Extract -------------
```

Sort the list by Tran ID, then descending response time

For each Tran ID, show only the worst 20

Include DB2 monitoring fields

Figure 3-9 Performance List Extended: LISTX Report Form

List Export

You can also write your Performance List Extended report (unsorted) to an extract data set. You do this by using the Export facility with a LIST or LISTX Report Form to define the record layout. When LISTX is used, the sort is ignored. The EOX marker in the Report Form defines the end of the extract record. There is no limit on the record length, so you can export all available fields or a selection. For more information, see 3.9.2, “Export extract” on page 101.

3.3.3 Performance Summary report

The Performance Summary report provides a summary of the CMF performance class records. Figure 3-10 shows the options for this report.

```
                        REDBOOK - Performance Summary Report
Command ===> ____________________________________________________________

System Selection:                          Report Output:
 APPLID . . SCSCPAA5  +                     DDname . . . . . . . . . SUMM0001
 Image  . . ________  +                     Print Lines per Page . . ___ (1-255)
 Group  . . ________  +

Report Format:
 Form . . . SUMBYATD  +
 Title  . . ______________________________________________________________
            ______________________________________________________________

Processing Options:                                Reporting Options:
 Time Interval  . . . 00:01:00  (hh:mm:ss)          _  Exclude Totals

Selection Criteria:
 _  Performance
```

Summarize by Application Tran ID within Tran ID by time of day

Specify time interval when summarizing by time of day (Start or Stop time)

Figure 3-10 Performance Summary report options

Default report format

Observe the columns of data in the Performance Summary report in Figure 3-11. This shows the default format of the report when a Report Form *is not* specified. It summarizes by transaction ID. The Task Count (#Tasks) shows the number of performance class records processed during the reporting period.

```
V1R3M0                                          CICS Performance Analyzer
                                                   Performance Summary
SUMM0001 Printed at  7:06:59  10/28/2002    Data from 11:10:29  10/14/2002 to 08:10:06  10/26/2002                    Page   1

                    Avg      Max      Avg      Avg      Avg      Avg      Avg      Avg      Avg      Avg      Avg
Tran     #Tasks Response Response Dispatch User CPU  Suspend DispWait  FC Wait   FCAMRq  IR Wait SC24UHWM SC31UHWM
                    Time     Time     Time     Time     Time     Time     Time              Time
AADD          5   .0035    .0108    .0019    .0014    .0015    .0001    .0006        0    .0000      934        0
AADD          5   .0048    .0107    .0022    .0016    .0026    .0001    .0011        1    .0000      939        0
AADD          5   .0330    .0945    .0303    .0035    .0028    .0027    .0000        1    .0000      979        0
AADD          5   .0020    .0023    .0019    .0012    .0001    .0000    .0000        0    .0000      941        0
AADD         18   .0115    .0945    .0099    .0020    .0016    .0008    .0003        1    .0000      949        0

ABRW         10   .0717    .6982    .0690    .0051    .0027    .0011    .0005        5    .0000     1011        0
ABRW        424   .0504  10.3529    .0019    .0015    .0485    .0000    .0000        7    .0000     1007        1
ABRW          1   .0052    .0052    .0021    .0021    .0031    .0000    .0000        0    .0030      976        0
ABRW        284   .1928  36.6088    .0017    .0014    .1911    .0000    .0000        7    .0000     1008        0
ABRW        191   .0182   2.9981    .0017    .0014    .0165    .0000    .0000        7    .0000     1008        0
ABRW          5   .1210    .5819    .0178    .0042    .1032    .0026    .0000        0    .1006     1021        0
ABRW         57   .0070    .0156    .0033    .0022    .0037    .0000    .0000        0    .0036     1005        0
ABRW         61   .0030    .0120    .0029    .0016    .0001    .0000    .0000        7    .0000     1008        0
ABRW       1033   .0789  36.6088    .0027    .0015    .0762    .0000    .0000        6    .0007     1008        0
```

Figure 3-11 Performance Summary default report

Report tailoring

Using a Report Form, you can easily change the format of the Performance Summary report to display the performance-related data in which you are interested. You can also tailor the sorting criteria by specifying up to three sort fields (ascending). Clock and Count fields can be

summarized statistically by requesting any of these functions: Average, Minimum, Maximum, Standard Deviation, and Total. Many sample Report Forms of type SUMMARY are provided with CICS PA for this purpose. For more information about how to use Report Forms, see 2.10, “Tailoring report formats” on page 44.

Figure 3-12 shows how you can tailor the Performance Summary report using a Report Form as the one shown in Figure 3-13. This example shows the performance data summarized by Application Naming transaction ID within transaction ID by time of day. Note the following points:

- Transaction activity is summarized for each one-minute interval. The time interval defaults to one minute, but you can override this value and specify a time interval anywhere from one second to 24 hours (rounded down by CICS PA to align to the hour or day). This is an option on the report. It allows you to use the one Report Form for multiple reports with different report intervals.
- CICS Application Naming support allows you to monitor the performance of individual application transaction IDs (or programs) selected from a menu and run under one menu transaction ID. This is achieved by defining the field APPLTRAN (or APPLPROG) in the Report Form. This data is available under certain circumstances. For more information, see Chapter 14, “Application Naming support” on page 311.

```
V1R3M0                                                  CICS Performance Analyzer
                                                          Performance Summary
SUMM0001 Printed at 14:31:26  10/30/2002     Data from 11:07:20  10/30/2002 to 11:09:37  10/30/2002             Page   1
Summary by Application Transaction ID within Transaction ID by Time-of-Day
                                      Avg      Max       Avg       Avg      Avg      Avg      Avg      Avg      Max
Stop     Tran     Tran       #Tasks Response Response Dispatch User CPU  Suspend  Suspend DispWait  IR Wait  IR Wait
Interval                               Time     Time     Time     Time     Time    Count     Time     Time     Time
11:07:00 MENU     NAME            1   .0246    .0246    .0243    .0035    .0003        3    .0003    .0000    .0000
11:07:00                          1   .0246    .0246    .0243    .0035    .0003        3    .0003    .0000    .0000

11:08:00 MENU     PAYR            4   .0007    .0007    .0007    .0006    .0000        1    .0000    .0000    .0000
11:08:00 MENU     QPAY            6   .0007    .0008    .0007    .0005    .0000        1    .0000    .0000    .0000
11:08:00 MENU     TAXQ           12   .0008    .0010    .0008    .0006    .0000        1    .0000    .0000    .0000
11:08:00 MENU     UTXC            1   .0007    .0007    .0007    .0006    .0000        1    .0000    .0000    .0000
11:08:00                         23   .0008    .0010    .0007    .0006    .0000        1    .0000    .0000    .0000

11:09:00 MENU     NAME            1   .0008    .0008    .0008    .0005    .0000        1    .0000    .0000    .0000
11:09:00 MENU     PAYR           11   .0007    .0009    .0007    .0006    .0000        1    .0000    .0000    .0000
11:09:00 MENU     QPAY            5   .0009    .0013    .0009    .0006    .0000        1    .0000    .0000    .0000
11:09:00 MENU     TAXQ            2   .0007    .0007    .0006    .0006    .0000        1    .0000    .0000    .0000
11:09:00 MENU     UTXC            6   .0007    .0008    .0007    .0006    .0000        1    .0000    .0000    .0000
11:09:00                         25   .0008    .0013    .0007    .0006    .0000        1    .0000    .0000    .0000
```

Figure 3-12 Performance Summary report: Application Naming summarized by time of day

```
                    EDIT SUMMARY Report Form - SUMBYATD      Row 1 to 15 of 15
Command ===> ____________________________________________ Scroll ===> CSR_

Description  . . . . Summary by Application Tran ID__  Version (VRM): 620

Selection Criteria:
 _  Performance

   Field
/  Name +    S Type    Fn   Description
_  STOP____  A TIMES__ ___  Task stop time
_  TRAN____  A _______ ___  Transaction identifier
_  APPLTRAN  A _______ ___  Application naming Tran ID
_  TASKCNT_    _______ ___  Total Task count
_  RESPONSE    _______ AVE  Transaction response time
_  RESPONSE    _______ MAX  Transaction response time
_  DISPATCH    TIME___ AVE  Dispatch time
_  CPU_____    TIME___ AVE  CPU time
_  SUSPEND_    TIME___ AVE  Suspend time
_  SUSPEND_    COUNT__ AVE  Suspend time
_  DISPWAIT    TIME___ AVE  Redispatch wait time
_  IRWAIT__    TIME___ AVE  MRO link wait time
_  IRWAIT__    TIME___ MAX  MRO link wait time
_  EOR_____    _______ ___  ---------------- End of Report ----------------
_  EOX_____    _______ ___  ---------------- End of Extract ---------------
```

Summarize by Stop time, Tran ID and Application Tran ID

Five statistical functions are available

Figure 3-13 Performance Summary: SUMMARY Report Form

Summary Export

You can also write your Performance Summary report to an extract data set. You can do this by using the Export facility with a SUMMARY Report Form to define the record layout and summarization criteria. The EOX marker in the Report Form defines the end of the extract record. There is no limit on the record length, so you can export all available fields or a selection. For more information, see 3.9.2, “Export extract” on page 101.

3.3.4 Performance Totals report

The Performance Totals report (Figure 3-14) provides a comprehensive analysis of the resource usage of your CICS system. You can use this report to gain a system-wide perspective of CICS system performance. Alternatively, you can use selection criteria to narrow the scope of the report. For example, you can specify, “Show me the resource usage for a particular group of transaction IDs or a single transaction ID or a single task number”.

```
                        REDBOOK - Performance Totals Report
Command ===> ____________________________________________________________

System Selection:                        Report Output:
 APPLID . . SCSCPAA5  +                   DDname . . . . . . . . . TOTL0001
 Image  . . ________  +                   Print Lines per Page . . ___ (1-255)
 Group  . . ________  +

Report Format:
 Title  . . ____________________________________________________________
            ____________________________________________________________

Selection Criteria:
 _  Performance  *
```

Figure 3-14 Performance Totals report options

Report format

Figure 3-15 shows the Performance Totals report, which has four parts:

- **Overall CICS System Usage**: Reports CMF data about the CICS system as a whole:
  - CPU and dispatch times, broken down by TCB modes
  - Performance record and task counts
- **CPU and Dispatch statistics**: Provides a breakdown of the CPU, dispatch and suspend counts, and elapsed time. CPU time is broken down by each CICS Dispatcher TCB mode.
- **Resource Utilization statistics**: Each data field in the performance record is summarized into Total, Avg/Task and Max/Task, showing:
  - Count and time components for clock fields
  - Count values for count fields
- **User Field statistics**: Reports the statistics for the user fields (from any user-defined EMPs in the MCT) in the CMF performance class records.

```
V1R3M0                                          CICS Performance Analyzer
                                                     Performance Totals
TOTL0001 Printed at 14:27:51  11/05/2002    Data from 11:10:29  11/04/2002 to 11:33:51  11/04/2002                    Page   1

                                 Dispatched Time          CPU Time
                               DD HH:MM:SS    Secs   DD HH:MM:SS    Secs

Total Elapsed Run Time           00:23:22    1402

From Selected Performance Records

QR Dispatch/CPU Time             00:00:20      20      00:00:13      13
MS Dispatch/CPU Time             00:00:12      12      00:00:01       1
                                 --------   -----      --------  ------
 TOTAL (QR + MS)                 00:00:32      32      00:00:14      14

L8 CPU Time                                            00:00:00       0
J8 CPU Time                                            00:00:00       0
S8 CPU Time                                            00:00:00       0
                                 --------   -----      --------  ------
 TOTAL (L8 + J8 + S8)            00:00:00       0      00:00:00       0

                                 --------   -----      --------  ------
 Total CICS TCB Time             00:00:32      32      00:00:14      14
```

Figure 3-15 Performance Totals report (Part 1 of 3)

```
Total Performance Records (Type C)                    338
Total Performance Records (Type D)                     36
Total Performance Records (Type F)                      0
Total Performance Records (Type S)                      0
Total Performance Records (Type T)                    270
                                                 --------                                                        --------
Total Performance Records (Selected)                  644          Total Performance Records                          644

V1R3M0                                              CICS Performance Analyzer
                                                        Performance Totals
TOTL0001 Printed at 14:27:51  11/05/2002    Data from 11:10:29  11/04/2002 to 11:33:51  11/04/2002                      Page   2

                                                 ...... C  O  U  N  T  S ......   ........... T  I  M  E ...........
From Selected Performance Records                   Total   Avg/Task   Max/Task       Total    Avg/Task     Max/Task

Dispatch Time                                       31294       48.6       3171          32        .049        9.349
CPU Time                                                                                 14        .022        2.343
RLS CPU (SRB) Time                                                                        0        .000         .000
Suspend Time                                        30921       48.0       3170        6587      10.229     1385.297
Dispatch Wait Time                                  30650       47.6       3170           5        .008        1.165
Dispatch Wait Time (QR Mode)                        30223       46.9       3170           4        .006        1.086
Response (-TCWait for Type C)                                                            24        .070        2.139
Response (All Selected Tasks)                                                          5124       7.956     1386.703
QR Dispatch Time                                    30831       47.9       3171          20        .030        3.705
MS Dispatch Time                                      307         .5         64          12        .019        5.643
RO Dispatch Time
QR CPU Time                                                                              13        .021        1.905
MS CPU Time                                                                               1        .002         .438
RO CPU TIME
L8 CPU Time                                                                               0        .000         .000
J8 CPU Time                                                                               0        .000         .000
S8 CPU Time                                                                               0        .000         .000

 V1R3M0                                             CICS Performance Analyzer
                                                        Performance Totals
TOTL0001 Printed at 14:27:51  11/05/2002    Data from 11:10:29  11/04/2002 to 11:33:51  11/04/2002                      Page   3

                                                 ...... C  O  U  N  T  S ......   ........... T  I  M  E ...........
From Selected Performance Records                   Total   Avg/Task   Max/Task       Total    Avg/Task     Max/Task

FCWAIT   File I/O wait time                           293         .5        214           1        .002         .952
RLSWAIT  RLS File I/O wait time                         1         .0          1           0        .000         .068
TSWAIT   VSAM TS I/O wait time                          0         .0          0           0        .000         .000
TSSHWAIT Asynchronous Shared TS wait time               0         .0          0           0        .000         .000
JCWAIT   Journal I/O wait time                         12         .0          1           0        .000         .025
TDWAIT   VSAM transient data I/O wait time              0         .0          0           0        .000         .000

IRWAIT   MRO link wait time                           429         .7          7           9        .013        3.734

CFDTWAIT CF Data Table access requests wait time        0         .0          0           0        .000         .000
CFDTSYNC CF Data Table syncpoint wait time              0         .0          0           0        .000         .000
 ......
 ......
TCMSGIN1 Messages received count                      537         .8          2
TCCHRIN1 Terminal characters received count          6996       10.9        225
TCMSGOU1 Messages sent count                          541         .8          2
TCCHROU1 Terminal characters sent count            358311      556.4       1865
 ......
 ......
TCM62IN2 LU6.2 messages received count                  0         .0          0
TCC62IN2 LU6.2 characters received count                0         .0          0
TCM62OU2 LU6.2 messages sent count                      0         .0          0
TCC62OU2 LU6.2 characters sent count                    0         .0          0

FCADD    File ADD requests                              0         .0          0
FCBROWSE File Browse requests                        6556       10.2       1767
FCDELETE File DELETE requests                           0         .0          0
FCGET    File GET requests                            177         .3        137
FCPUT    File PUT requests                              0         .0          0
```

Figure 3-16 Performance Totals report (Part 2 of 3)

```
 V1R3M0                                                CICS Performance Analyzer
                                                          Performance Totals
TOTL0001 Printed at 14:27:51  11/05/2002    Data from 11:10:29  11/04/2002 to 11:33:51  11/04/2002                        Page   4

                                                     ...... C  O  U  N  T  S ......   ........... T  I  M  E ...........
From Selected User Records                              Total   Avg/Task   Max/Task       Total    Avg/Task     Max/Task

TEST          TEST    S001                                 54         .1          1          20        .032        1.329
TEST          TEST    S002                                 54         .1          1           0        .000         .002
RMITOTAL      ECPRMI  A001                                  0         .0          0
RMIOTHER      ECPRMI  A002                                  0         .0          0
RMIDB2        ECPRMI  A003                                  0         .0          0
RMIDBCTL      ECPRMI  A004                                  0         .0          0
RMIEXDLI      ECPRMI  A005                                  0         .0          0
RMIMQM        ECPRMI  A006                                  0         .0          0
RMITCPIP      ECPRMI  A007                                  0         .0          0
ICTOTAL       IC      A001                                  0         .0          0
ASKTIME       IC      A002                                  0         .0          0
CANCEL        IC      A003                                  0         .0          0
DELAY         IC      A004                                  0         .0          0
INTERVAL      IC      A005                                  0         .0          0
POST          IC      A006                                  0         .0          0
RETRIEVE      IC      A007                                  0         .0          0
START         IC      A008                                  0         .0          0
```

Figure 3-17 Performance Totals report (Part 3 of 3)

3.3.5 Wait Analysis report

The Wait Analysis report provides a breakdown of wait activity by transaction ID (or other ordering fields). You can see at a glance which CICS resources are causing your transactions to be suspended. This report can help you to quickly identify the possible source of a performance response time problem. Figure 3-18 shows the options for this report.

```
                          REDBOOK - Wait Analysis Report
Command ===> ____________________________________________________________

 System Selection:                          Report Output:
  APPLID . . SCSCPAA5  +                     DDname . . . . . . . . . WAIT0001
  Image  . . ________  +                     Print Lines per Page . . ___ (1-255)
  Group  . . ________  +

Order by:
 1 . . ________  +  2 . . ________  +  3 . . ________  +

 Processing Options:
  Time Interval  . . . ________  (hh:mm:ss)

  Report Format:
   Title  . . ______________________________________________________________
              ______________________________________________________________

  Selection Criteria:
   _  Performance  *
```

Figure 3-18 Wait Analysis report options

Report format

Figure 3-19 shows the Wait Analysis (Bottleneck) report. The Wait Analysis report has two sections.

The first section provides a summary of common performance metrics, including number of Tasks, Response Time, Dispatch Time, CPU Time, Suspend Wait Time, Dispatch Wait Time, RMI Elapsed Time, and RMI Suspend Time.

The ratio calculations on the right are particularly useful to see at a glance a possible direction to look where the response/wait times are bad. In particular, observe that:

- CPU Time is shown as a percentage of Dispatch Time. This may indicate a possible lack of CPU.
- Dispatch Wait Time is shown as a percentage of Suspend Time. This may also indicate a lack of CPU or that another task is consuming the QR TCB. For example, if the Dispatch Wait Time was a significant amount of the Suspend Time, that indicates that the task is ready for dispatch but cannot for some reason.

The second section provides a detailed breakdown of suspend time by component, such as dispatch wait, file wait, and so on. Components are reported in descending wait time order, thereby ensuring that the primary cause of task wait is at the top of the list.

You can sort the report by up to three fields. The default is to summarize by transaction ID.

```
V1R3M0                                          CICS Performance Analyzer
                                                  Wait Analysis Report

  WAIT0001 Printed at 16:02:13  8/06/2003    Data from 08:06:06  8/05/2003 to 08:13:33  8/05/2003                    Page       1

  ---------------------------------------------------------------------------------------------------------------------------------
  Tran=CATA  Start=08:00:00  Program=CATAPROG  Interval=08:00:00
    Summary Data                                        -------- Time ---------    ------ Count ------    ------ Ratio ------
                                                              Total     Average       Total    Average
      # Tasks                                                                            1
      Response Time                                         0.0038      0.0038
      Dispatch Time                                         0.0022      0.0022           3        3.0     59.5% of Response
      CPU Time                                              0.0016      0.0016           3        3.0     70.0% of Dispatch
      Suspend Wait Time                                     0.0015      0.0015           3        3.0     40.0% of Response
      Dispatch Wait Time                                    0.0000      0.0000           2        2.0      1.1% of Suspend
      Resource Manager Interface (RMI) elapsed time         0.0001      0.0001           4        4.0      2.1% of Response
      Resource Manager Interface (RMI) suspend time         0.0000      0.0000           0        0.0      0.0% of Suspend

    Suspend Detail                                      ------------------- Suspend Time ------------------- ----- Count -----
                                                              Total     Average   %age  Graph                   Total  Average
      N/A      Other Wait Time                              0.0014      0.0014  92.6% |*****************           2      2.0
      DSPDELAY First dispatch wait time                     0.0001      0.0001   7.4% |*                           1      1.0

  ---------------------------------------------------------------------------------------------------------------------------------
  Tran=XVOJ  Start=08:00:00  Program=XVOJPROG  Interval=08:00:00
    Summary Data                                        -------- Time ---------    ------ Count ------    ------ Ratio ------
                                                              Total     Average       Total    Average
      # Tasks                                                                          261
      Response Time                                        28.1101      0.1077
      Dispatch Time                                         3.2940      0.0126       10578       40.5     11.7% of Response
      CPU Time                                              2.4824      0.0095       10578       40.5     75.4% of Dispatch
      Suspend Wait Time                                    24.8144      0.0951       10578       40.5     88.3% of Response
      Dispatch Wait Time                                    2.9375      0.0113       10317       39.5     11.8% of Suspend
      Resource Manager Interface (RMI) elapsed time        17.0496      0.0653       11365       43.5     60.7% of Response
      Resource Manager Interface (RMI) suspend time        16.8430      0.0645       10255       39.3     67.9% of Suspend

    Suspend Detail                                      ------------------- Suspend Time ------------------- ----- Count -----
                                                              Total     Average   %age  Graph                   Total  Average
      IMSWAIT  IMS (DBCTL) wait time                       13.6869      0.0524  55.2% |***********             9781     37.5
      DSPDELAY First dispatch wait time                     4.8588      0.0186  19.6% |***                        261      1.0
      TCLDELAY > First dispatch TCLSNAME wait time          4.7523      0.0182  19.2% |***                         56      0.2
      IRIOWTT  MRO link wait time                           3.0935      0.0119  12.5% |**                          59      0.2
      DB2WAIT  DB2 SQL/IFI wait time                        3.0747      0.0118  12.4% |**                         389      1.5
      N/A      Other Wait Time                              0.0828      0.0003   0.3% |                           86      0.3
      LMDELAY  Lock Manager (LM) wait time                  0.0177      0.0001   0.1% |                            2      0.0
```

Figure 3-19 Wait Analysis report

Recap report

The Wait Analysis report is always followed by the Wait Analysis Recap report to provide a breakdown of the CMF input data. Figure 3-20 shows the Recap report. It provides an overview of system-wide wait time. All CMF suspend components are reported in descending wait time order, ensuring that the primary cause of system-wide task wait is at the top of the list.

The Recap report shows all wait clocks, and even clocks that accumulated no wait time. This allows you to see at a glance:

- All the individual suspend component clocks
- Clocks that may be missing

```
V1R3M0                                          CICS Performance Analyzer
                                                Wait Analysis Recap Report

  WAIT0001 Printed at 16:02:13  8/06/2003    Data from 08:06:06  8/05/2003 to 08:13:33  8/05/2003                    Page       1

                                                        --------- Time --------                          ------ Ratio ------
                                                              Total     Average

  # Tasks                                                     11768
  Response Time                                           2156.6275      0.1833
  Dispatch Time                                            136.3500      0.0116                                  6.3% of Response
  CPU Time                                                  76.7092      0.0065                                 56.3% of Dispatch
  Suspend Wait Time                                       2020.1995      0.1717                                 93.7% of Response
  Dispatch Wait Time                                        52.9988      0.0045                                  2.6% of Suspend
  Resource Manager Interface (RMI) elapsed time            847.5371      0.0720                                 39.3% of Response
  Resource Manager Interface (RMI) suspend time            842.6671      0.0716                                 41.7% of Suspend

                                                        ------------------- Suspend Time -------------------   Field Availability
                                                              Total     Average   %age  Graph                 Present    Missing

  IRIOWTT  MRO link wait time                              835.9785      0.0710  41.4% |********               11768          0
  IMSWAIT  IMS (DBCTL) wait time                           477.9522      0.0406  23.7% |****                   11768          0
  WTEXWAIT External ECB wait time                          292.1129      0.0248  14.5% |**                     11768          0
  ICDELAY  Interval Control (IC) wait time                 275.9447      0.0234  13.7% |**                     11768          0
  DB2WAIT  DB2 SQL/IFI wait time                            70.8436      0.0060   3.5% |                        11768          0
  DSPDELAY First dispatch wait time                         52.3120      0.0044   2.6% |                        11768          0
  TCLDELAY > First dispatch TCLSNAME wait time              46.5026      0.0040   2.3% |                        11768          0
  MXTDELAY > First dispatch MXT wait time                    0.0000         N/C   0.0% |                        11768          0
  FCIOWTT  File I/O wait time                                8.1584      0.0007   0.4% |                        11768          0
  N/A      Other Wait Time                                   3.0880      0.0003   0.2% |
  LU62WTT  LU6.2 wait time                                   2.7382      0.0002   0.1% |                        11768          0
  WTCEWAIT CICS ECB wait time                                0.5165      0.0000   0.0% |                        11768          0
  LMDELAY  Lock Manager (LM) wait time                       0.4619      0.0000   0.0% |                        11768          0
  TDIOWTT  VSAM transient data I/O wait time                 0.0530      0.0000   0.0% |                        11768          0
  GVUPWAIT Give up control wait time                         0.0396      0.0000   0.0% |                        11768          0
  TCIOWTT  Terminal wait for input time                      0.0001      0.0000   0.0% |                        11768          0
  RQRWAIT  Request Receiver wait Time                        0.0000      0.0000   0.0% |                            0      11768
  TSIOWTT  VSAM TS I/O wait time                             0.0000         N/C   0.0% |                        11768          0
  ENQDELAY Local Enqueue wait time                           0.0000         N/C   0.0% |                        11768          0
  DB2CONWT DB2 Connection wait time                          0.0000         N/C   0.0% |                        11768          0
  DB2RDYQW DB2 Thread wait time                              0.0000         N/C   0.0% |                        11768          0
```

Figure 3-20 Wait Analysis Recap report

3.3.6 Cross-System Work report

The Cross-System Work report correlates CMF performance class data by network unit of work (UOW) ID for a single CICS system or multiple CICS systems. Figure 3-21 shows the report options.

To run the report for multiple systems, define them to a Group. Groups enable you to connect systems together for consolidated reporting. This is especially useful for MRO, advanced program-to-program communication (APPC), or other systems that share workloads. For information about how to do this, see “Groups this system belongs to” on page 33.

```
                    REDBOOK - Cross-System Work Report
Command ===> ____________________________________________________________

Specify report details and press Enter to perform validation.

System Selection:                        Report Output:
 APPLID . . ________  +                   DDname . . . . . . . . . CROS0001
 Image  . . ________  +                   Print Lines per Page . . ___ (1-255)
 Group  . . MROPROD_  +

Processing Options:
1  1. UOWs with more than one record
   2. UOWs with a single record
   3. All UOWs

Report Format:
 Form . . . ________  +
 Title  . . ______________________________________________________
            ______________________________________________________

Selection Criteria:
 _  Performance  *
```

Specify a group of systems

Figure 3-21 Cross-System Work report options

Default report format

Observe the columns of data in the Cross-System Work report in Figure 3-22. This example shows the default format of the report when a Report Form *is not* specified. The default report includes only the performance class records that have the same network unit of work in multiple records (processing option 1).

Each line in the report is printed from a single CMF performance class record. Records that are part of the same network unit of work are printed sequentially in groups separated by a blank line.

The transaction Request Types are:

- **AP**: Application program request, including Distributed Program Link (DPL)
- **FS**: Function shipping request:
  - File Control (F)
  - Interval Control (I)
  - Transient Data (D)
  - Temporary Storage (S)
- **TR**: Transaction routing request for Terminal-Owning Region (TOR)

```
 V1R3M0                                                CICS Performance Analyzer
                                                          Cross-System Work
CROS0001 Printed at 12:09:28  10/27/2002 Data from 11:10:51  10/24/2002 to 08:10:28  10/26/2002                          Page     3

                                      Request           Fcty  Conn                    UOW                 R              Response A
Tran Userid   SC TranType Term  LUName   Type   Program  T/Name Name NETName           Seq APPLID     Task T   Stop Time    Time   B

ABRW EUGENED  TP U        S23D SCSC23D  AP:     DFHúABRW T/S23D      USIBMSC.SCSC23D    1 SCSCPAA5     61 T 11:13:20.275    .0080
CSMI CICSLS   TO UM       R11  SCSCPAA5 FS:F--- DFHMIRS  T/R11  CJB1 USIBMSC.SCSC23D    1 SCSCPAA5     57 T 11:13:20.274    .0044

ABRW EUGENED  TP U        S23D SCSC23D  AP:     DFHúABRW T/S23D      USIBMSC.SCSC23D    1 SCSCPAA5     62 T 11:13:21.332    .0064
CSMI CICSLS   TO UM       R11  SCSCPAA5 FS:F--- DFHMIRS  T/R11  CJB1 USIBMSC.SCSC23D    1 SCSCPAA5     58 T 11:13:21.331    .0039

CEDA EUGENED  TO U        S23D SCSC23D  AP:     DFHEDAP  T/S23D      USIBMSC.SCSC23D    3 SCSCPAA5     72 T 11:16:28.284   1.1025
CEDA EUGENED  TO U        S23D SCSC23D  AP:     DFHEDAP  T/S23D      USIBMSC.SCSC23D    1 SCSCPAA5     72 C 11:16:27.181   3.0046
CEDA EUGENED  TO U        S23D SCSC23D  AP:     DFHEDAP  T/S23D      USIBMSC.SCSC23D    1 SCSCPAA5     72 C 11:16:24.177   2.2127
CEDA EUGENED  TO U        S23D SCSC23D  AP:     DFHEDAP  T/S23D      USIBMSC.SCSC23D    1 SCSCPAA5     72 C 11:16:21.964  46.5125
CEDA EUGENED  TO U        S23D SCSC23D  AP:     DFHEDAP  T/S23D      USIBMSC.SCSC23D    1 SCSCPAA5     72 C 11:15:35.451    .6794

RMST EUGENED  TO U        S23D SCSC23D  TR:CJB3          T/S23D      USIBMSC.SCSC23D    1 SCSCPAA5    178 T 11:22:38.447  48.9210
STAT CICSLS   TO U        R11  SCSCPAA5 AP:     DFHOSTAT S/S23D CJB1 USIBMSC.SCSC23D    1 SCSCPAA5    349 T 11:22:38.433  66.7720
RMST EUGENED  TO U        S23D SCSC23D  TR:CJB3          T/S23D      USIBMSC.SCSC23D    1 SCSCPAA5    178 C 11:21:49.526  10.0524
RMST EUGENED  TO U        S23D SCSC23D  TR:CJB3          T/S23D      USIBMSC.SCSC23D    1 SCSCPAA5    178 C 11:21:39.473   7.8027
RMST EUGENED  TO U        S23D SCSC23D  TR:CJB3          T/S23D      USIBMSC.SCSC23D    1 SCSCPAA5    178 C 11:21:31.671    .0110

STAT EUGENED  TO U        S23D SCSC23D  AP:     DFHOSTAT T/S23D      USIBMSC.SCSC23D    1 SCSCPAA5    195 T 11:22:52.663   2.0203
STAT EUGENED  TO U        S23D SCSC23D  AP:     DFHOSTAT T/S23D      USIBMSC.SCSC23D    1 SCSCPAA5    195 C 11:22:50.642   8.9745
```

Figure 3-22 Cross-System Work default report

Report tailoring (Cross-System Work Extended report)

Using a Report Form, you can easily change the format of the report to produce the Cross-System Work Extended report showing only the performance-related data in which you are interested. Many sample Report Forms of type LIST or LISTX are provided with CICS PA for this purpose. For this report, a LISTX Form is used in the same way as a LIST Form. That is, the fields and the order of the columns are used, but the sort sequence is ignored. For more information about how to use Report Forms, see 2.10, “Tailoring report formats” on page 44.

Figure 3-23 shows the Cross-System Work Extended report, produced by specifying a LIST or LISTX Report Form including dispatch statistics. The records are sorted by:

- Network unit-of-work prefix (ascending)
- Network unit-of-work suffix (ascending)
- Syncpoint count concatenated with the task stop time (descending)
- Generic APPLID (ascending)

```
 V1R3M0                                                CICS Performance Analyzer
                                                          Cross-System Work Extended
CROS0001 Printed at  0:56:39  10/23/2002 Data from 15:41:19  10/12/2002 to 16:19:15  10/12/2002                          Page   1

 Tran Response Userid     TaskNo Stop          Response Dispatch Dispatch User CPU  Suspend  Suspend DispWait DispWait  IR Wait
       Time                     Time           Time     Time     Count    Time     Time     Count    Time     Count    Time
CPLT    .3939 CICSUSER        6 15:41:19.419    .3939    .0782        3    .0325    .3158        3    .3149        2    .0000
CSSY  71.4053 CICSUSER      III 15:42:30.828  71.4053  46.9670      401  17.6543  24.4382      401   9.9254      400    .0000
CSSY   4.9137 CICSUSER       12 15:41:24.346   4.9137    .4928       66    .0476   4.4209       66   2.5618       65    .0000
CSSY   5.3932 CICSUSER       10 15:41:24.822   5.3932    .8932       59    .2172   4.4999       59   2.7531       58    .0000
CSSY   5.6419 CICSUSER        9 15:41:25.069   5.6419   1.6045       75    .1472   4.0374       75   2.9273       74    .0000
CSSY   5.9801 CICSUSER       13 15:41:25.434   5.9801    .7826       87    .1627   5.1975       87   3.3042       86    .0000
CSSY   2.9653 CICSUSER       14 15:41:22.420   2.9653   1.2597       14    .0555   1.7056       14    .0393       13    .0000
CSSY    .4372 CICSUSER       15 15:41:19.898    .4372    .0037        1    .0034    .4335        1    .0000        0    .0000
CSSY    .5093 CICSUSER       16 15:41:19.977    .5093    .0065        3    .0084    .5028        3    .0103        2    .0000
CGRP   5.4980 CICSUSER       11 15:41:24.928   5.4980    .7931       69    .0613   4.7049       69   3.7141       68    .0000
```

Figure 3-23 Cross-System Work Extended tailored to shows dispatch statistics

Cross-System Work extract

You can also request a Cross-System Work extract. This extract combines CMF performance class records that belong to the same network unit of work into a single CMF-format record to provide a complete view of a transaction's CICS resource usage. You can then use the extract as input to CICS PA to produce any of the reports and extracts. For more information, see 3.9.1, "Cross-System Work extract" on page 99.

3.3.7 Transaction Group report

The Transaction Group report is used to help you understand the correlation of the performance class records that are attached in a CICS assigned transaction group.

The Transaction Group ID (TRNGRPID) is assigned internally by CICS at transaction attach time. CICS PA uses this ID to correlate the transactions belonging to the same work request, such as the CWXN (Web Attach) and CWBA (Alias transaction). Figure 3-24 shows the report options.

```
                    REDBOOK - Transaction Group Report
Command ===> ____________________________________________________________

System Selection:                        Report Output:
 APPLID . . SCSCPAA5  +                   DDname . . . . . . . . . TRGP0001
 Image  . . ________  +                   Print Lines per Page . . ___ (1-255)
 Group  . . ________  +

Processing Options:
 1  1. Groups of more than one record
    2. Groups of a single record
    3. All Groups

Report Format:
 Title  . . ____________________________________________________________
            ____________________________________________________________

Selection Criteria:
 _  Performance
```

Figure 3-24 Transaction Group report options

Report format

Figure 3-25 shows the format of the Transaction Group report. The Origin field can help you understand the flow of transactions through a CICS system when applied to transaction requests that originate through:

- CICS Web Support (CWS)
- Internet Inter-ORB Protocol (IIOP)
- External Call Interface (ECI) over TCP/IP
- 3270 Bridge "two-task model"

The detailed report is followed by a Summary report that summarizes and groups the transactions by their origin.

```
 V1R3M0                                                CICS Performance Analyzer
                                                          Transaction Group
TRGP0001 Printed at 11:46:14  10/24/2002 Data from 11:10:29  10/14/2002 to 08:10:06  10/16/2002                        Page     14

                           Brdg   Client        Request                          Fcty  Conn                 R              Response
Tran Userid   SC Origin    Tran IP Address       Type   Program  Term LUName   T/Name Name APPLID     Task T  Stop Time    Time

CWBA CICSLS   U  WEB            9.20.45.17      AP:     DFHWBTTA                           SCSCPAA5    618 T 11:30:11.51    .0385
CWXN CICSLS   U  SOCKET         9.20.45.17      AP:     DFHWBXN                            SCSCPAA5    617 T 11:30:11.47    .2545

CWBA CICSLS   U  WEB            9.20.45.17      AP:     DFHWBTTA                           SCSCPAA5    620 T 11:30:21.67    .0289
CWXN CICSLS   U  SOCKET         9.20.45.17      AP:     DFHWBXN                            SCSCPAA5    619 T 11:30:21.65    .3538

CWBA CICSLS   U  WEB            9.20.45.17      AP:     DFHWBTTA                           SCSCPAA5    622 T 11:30:29.44   1.4267
CWXN CICSLS   U  SOCKET         9.20.45.17      AP:     DFHWBXN                            SCSCPAA5    621 T 11:30:28.02    .3097

CWBA CICSLS   U  WEB            9.20.45.17      AP:     DFHWBTTA                           SCSCPAA5    624 T 11:30:34.63   1.1731
CWXN CICSLS   U  SOCKET         9.20.45.17      AP:     DFHWBXN                            SCSCPAA5    623 T 11:30:33.46    .2828

CEDA CICSLS   TO BRIDGE     CWBA                AP:     DFHEDAP  }AAJ }AAJ     B/}AAJ      SCSCPAA5    627 T 11:31:26.83  43.9778
CWBA CICSLS   U  WEB            9.20.45.17      AP:     DFHWBTTA                           SCSCPAA5    626 T 11:30:43.18    .3228
CWXN CICSLS   U  SOCKET         9.20.45.17      AP:     DFHWBXN                            SCSCPAA5    625 T 11:30:42.85    .0023


 V1R3M0                                                CICS Performance Analyzer
                                                       Transaction Group - Summary
TRGP0001 Printed at 11:46:14  10/24/2002 Data from 11:10:29  10/14/2002 to 08:10:06  10/16/2002                        Page     16

Origin                    Average    Average    Average    Average    Average    Average    Average    Average    Average
   Type      Transactions  Response   Dispatch   CPU Time   Suspend   DispWait    IR Wait   RMI Susp    FC Wait    SO Wait

BRIDGE              17      10.140       .000       .000       .010       .000       .000       .000       .000       .000
MRO SESS           163        .634       .000       .000       .001       .000       .001       .000       .000       .000
NONE                69     362.022       .301       .000       .061       .000       .000       .000       .000       .000
SCHEDULE            62        .280       .000       .000       .000       .000       .000       .000       .000       .000
SOCKET              50      44.630       .000       .000       .045       .000       .000       .000       .000       .045
START               28        .261       .000       .000       .000       .000       .000       .000       .000       .000
TDQUEUE             23        .012       .000       .000       .000       .000       .000       .000       .000       .000
TERM START          17        .011       .000       .000       .000       .000       .000       .000       .000       .000
TERMINAL          1818       2.468       .000       .000       .002       .000       .000       .000       .000       .000
WEB                 60        .154       .000       .000       .000       .000       .000       .000       .000       .000
XM RUN              16        .424       .000       .000       .000       .000       .000       .000       .000       .000
            ------------  --------   --------   --------   --------   --------   --------   --------   --------   --------
TOTAL             2323      13.781       .009       .000       .005       .000       .000       .000       .000       .001
```

Figure 3-25 Transaction Group report

3.3.8 BTS report

The BTS report provides a detailed report of the transactions performed by the same or different CICS systems on behalf of a single CICS BTS process. Figure 3-26 shows the report options.

```
                                REDBOOK - BTS Report
 Command ===> ____________________________________________________________

 System Selection:                          Report Output:
  APPLID . . SCSCPAA5  +                     DDname . . . . . . . . . CBTS0001
  Image  . . ________  +                     Print Lines per Page . . ___ (1-255)
  Group  . . ________  +

 Report Format:
  Title  . . ____________________________________________________________
             ____________________________________________________________

 Selection Criteria:
  _  Performance
```

Figure 3-26 BTS report options

Report format

Figure 3-27 shows the format of the BTS report. The BTS report is similar to the Cross-System Work and Transaction Group reports in that it is a detailed report. However, this report shows the correlation of the transactions performed by the same or different CICS systems on behalf of a single CICS BTS process (root activity ID).

The records are sorted by:

- BTS Process ID (Root Activity ID)
- Transaction Sequence Number
- Transaction Stop Time (ascending order)

```
V1R3M0                                                  CICS Performance Analyzer
                                                 CICS Business Transaction Services (BTS)
CBTS0001 Printed at 11:43:56  10/24/2002 Data from 11:10:29  10/14/2002 to 08:10:06  10/16/2002 Page       1

                                                   Process                    Pro/Act Cont'er  Event        R              Response
Tran SC TranType Process Name                        Type   Activity Name      Reqs     Reqs    Reqs   Task T  Stop Time     Time

SAL1 TP U                                                                          2        2       0    211 T 11:18:25.27    .1222

SAL1 TP U                                                                          2        2       0    239 T 11:19:18.33    .1835

PAY1 TP U                                                                          2        0       0    294 T 11:19:42.20    .1390

PAY1 TP U                                                                          2        0       0    305 T 11:19:57.64    .0747

RED1 U  U      R SALES111111                         ORDER    CREDIT-CHECK        0        2       1    176 T 11:17:32.05    .5333
STOC U  U      R SALES111111                         ORDER    STOCK-CHECK         0        2       1    177 T 11:17:32.05    .5145
SALE U  U      R SALES111111                         ORDER    DFHROOT            10        5       4    175 T 11:17:32.05    .5675
INV1 U  U        SALES111111                         ORDER    INVOICE-BUILD       0        1       1    178 T 11:17:32.09    .0359
DEL1 U  U        SALES111111                         ORDER    DELIV-NOTE          0        1       1    179 T 11:17:33.29   1.2323
SALE U  U        SALES111111                         ORDER    DFHROOT             0        0       0    180 T 11:17:33.31   1.2198
SALE U  U        SALES111111                         ORDER    DFHROOT             1        3       2    183 T 11:17:33.37    .0800
SALE U  U        SALES111111                         ORDER    DFHROOT             1        3       5    184 T 11:17:33.42    .0519
SALE U  U        SALES111111                         ORDER    DFHROOT             2        2       1    186 T 11:17:38.65    .0566
REM1 U  U        SALES111111                         ORDER    SEND-REMINDER       0        1       1    187 T 11:17:38.68    .0243
```

Figure 3-27 BTS report

3.3.9 Workload Activity report

The Workload Activity report provides a detailed list, summary, or list and summary of the segments of work (transactions) performed by the same or different CICS systems through transaction routing, function shipping, or distributed transaction processing on behalf of a single network unit of work. Figure 3-28 shows the report options.

```
                          REDBOOK - Workload Activity Report
Command ===> ____________________________________________________________

System Selection:                        Report Output:
 APPLID . . SCSCPAA5  +                   DDname . . . . . . . . . WKLD0001
 Image  . . ________  +                   Print Lines per Page . . ___ (1-255)
 Group  . . ________  +

Reports Required:                        Processing Options:
 _  List                                  Peak Percentile . . . 90_  (50-100)
 /  Summary  _  Include EXE Y tasks

Report Format:
 Title  . . ______________________________________________________________
            ______________________________________________________________

Selection Criteria:
 _  Performance
```

Figure 3-28 Workload Activity report options

Report format

Figure 3-29 shows the Workload Activity report. This report highlights the MVS Workload Manager (WLM) service class and report class, and WLM reporting and completion phase (BTE or EXE) used for each transaction.

The Workload Activity Summary report summarizes response time by WLM service and report classes. The statistics it provides are Average, Standard Deviation, nn% Peak, and Maximum.

```
V1R3M0                                          CICS Performance Analyzer
                                              Workload Manager Activity List
WKLD0001 Printed at 12:33:47  10/25/2002 Data from 13:31:17  10/24/2002 to 13:32:08  10/24/2002                          Page      1

                                   Request           Fcty  Conn Service  Report                  R                  Response A
Tran Userid   SC TranType Term  LUName   Type   Program  T/Name Name Class    Class    APPLID     Task T  P  C  Stop Time   Time   B

WROS CICSLS   TP U        0081 LE000081 TR:IRA1          T/0081                        STM4IRT1  69693 T BTE   13:31:34.99 13.4729
WROS CICSLS   TP U        <ADQ STM4IRT1 AP:     CRWWPPOS S/0081 IRT1                   STM4IRA1  34695 T EXE Y 13:31:34.34 11.2956

TPME CICSLS   TP U        0081 LE000081 AP:     CRWWPAMU T/0081                        STM4IRT1  70004 T BTE   13:31:36.90  1.5024

WRNO CICSLS   TP U        0081 LE000081 TR:IRA1          T/0081                        STM4IRT1  70078 T BTE   13:31:46.15  7.3057
WRNO CICSLS   TP U        <ACY STM4IRT1 AP:     CRWWPPNO S/0081 IRT1                   STM4IRA1  34869 T EXE Y 13:31:45.87  7.0220


  V1R3M0                                        CICS Performance Analyzer
                                        Workload Manager Activity Summary by Service Class
WKLD0001 Printed at 14:09:35  10/21/2002 Data from 10:49:57  10/20/2002 to 10:57:47  10/20/2002                          Page     83

Service                                      -------------- Response Time --------------
Class      APPLID      Phase         #Tasks     Average     Std Dev     90% Peak    Maximum

*Other*    STM4IRA1    BTE              105       .0009       .0007       .0018       .0072
           STM4IRA2    BTE              174       .0008       .0002       .0010       .0019
           STM4IRT0    BTE              589      1.1839      8.8946     12.5868     135.009
           STM4IRT1    BTE              551      1.7020      9.7902     14.2531     133.831
           STM4IRT2    BTE              570      2.1656     13.4634     19.4257     176.251
           STM4IRT3    BTE              570      1.4052      9.6969     13.8366     149.703
           STM4IRT4    BTE              570      1.4656      8.0848     11.8303     135.889
           STM4IRT5    BTE              570      2.3631     14.1819     20.5443     179.756
```

Figure 3-29 Workload Activity report

3.4 Exception reports

The Exception reports are:

- Exception List
- Exception Summary

3.4.1 Exception List report

The Exception List report provides detailed analysis of the exception class records collected by the CICS Monitoring Facility (CMF). Figure 3-30 shows the report options.

```
                        REDBOOK - Exception List Report
 Command ===> ____________________________________________________________

 System Selection:                        Report Output:
  APPLID . . SCSCPAA5  +                   DDname . . . . . . . . . XLST0001
  Image  . . ________  +                   Print Lines per Page . . ___ (1-255)
  Group  . . ________  +

 Report Format:
  Title  . . ______________________________________________________________
             ______________________________________________________________

 Selection Criteria:
  _  Exception  *
```

Figure 3-30 Exception List report options

Report format

Figure 3-31 shows an example of the Exception List report. The Exception List report provides two types of information:

- The cause of the exception condition
- The information necessary to relate this record to the performance class record on the Performance List report

```
V1R3M0                                          CICS Performance Analyzer
                                                     Exception List
XLST0001 Printed at  9:51:50  10/22/2002     Data from 08:08:15  10/16/2002                      APPLID SCSCPAA5 Page       1

                            Tran     Service  Report           Exp ..... Time ..... Current  Resource                  Exception
Tran Term LUName   Userid   SC Class    Class    Class     Taskno Seq Start    Elapsed Program    Type   Resource ID      Type

ABRW P045 SCSCP045 CICSLS   TP                                 834   1 08:08:15  10.189 DFHúABRW FILE     FILEA            STRING
ABRW S205 SCSC205  EUGENED  TP                                 835   1 08:08:25   7.245 DFHúABRW FILE     FILEA            STRING
ABRW S220 SCSC220  EUGENED  TP                                 837   1 08:08:30   2.996 DFHúABRW FILE     FILEA            STRING
CECI S220 SCSC220  EUGENED  TO                                1151   1 08:11:48    .005 DFHECID  TEMPSTOR CACA             BUFFER
CECI S220 SCSC220  EUGENED  TO                                1151   2 08:11:48    .002 DFHECID  TEMPSTOR CACA             BUFFER
CECI S220 SCSC220  EUGENED  TO                                1151   3 08:11:48    .002 DFHECID  TEMPSTOR CACA             BUFFER
CECI P045 SCSCP045 CICSLS   TO                                1149   1 08:11:48    .004 DFHECID  TEMPSTOR LONGTSNAME       BUFFER
CECI P045 SCSCP045 CICSLS   TO                                1149   2 08:11:48    .004 DFHECID  TEMPSTOR LONGTSNAME       BUFFER
CECI P045 SCSCP045 CICSLS   TO                                1149   3 08:11:48    .002 DFHECID  TEMPSTOR LONGTSNAME       BUFFER
CECI S220 SCSC220  EUGENED  TO                                1151   6 08:11:49    .003 DFHECID  TEMPSTOR CACA             BUFFER
CECI S220 SCSC220  EUGENED  TO                                1151   7 08:11:49    .003 DFHECID  TEMPSTOR CACA             BUFFER
```

Figure 3-31 Exception List report

3.4.2 Exception Summary report

The Exception Summary report summarizes the exception class records collected by the CICS Monitoring Facility (CMF). Figure 3-32 shows the report options.

```
                    REDBOOK - Exception Summary Report
Command ===> ____________________________________________________________

System Selection:                        Report Output:
 APPLID . . SCSCPAA5  +                   DDname . . . . . . . . . XSUM0001
 Image  . . ________  +                   Print Lines per Page . . ___ (1-255)
 Group  . . ________  +

Report Format:
 Title  . . ____________________________________________________________
            ____________________________________________________________

Selection Criteria:
 _  Exception
```

Figure 3-32 Exception Summary report options

Report format

Figure 3-33 shows the Exception Summary report. The exception class records are summarized by transaction ID. The report provides the total number of exceptions for each transaction, according to:

- Auxiliary temporary storage Virtual Storage Access Method (VSAM) buffer and string wait conditions
- VSAM LSRPOOL buffer and string wait conditions
- VSAM file string wait conditions
- Temporary storage wait conditions
- Main storage wait conditions
- Coupling facility data table pool wait conditions

```
V1R3M0                                          CICS Performance Analyzer
                                                     Exception Summary

XSUM0001 Printed at  9:57:34  10/22/2002     Data from 08:08:15  10/16/1999 to 08:12:14 10/16/1999                      Page       1

Tran   Total    TS-Buffer-Wait   TS-String-Wait  Pool-Buffr-Wait  Pool-Strng-Wait  File-Strng-Wait  ..Temp Storage.  ..Main Storage.
 ID   Excepts  Average   Count  Average   Count  Average   Count  Average   Count  Average   Count  Average   Count  Average   Count

ABRW        3                                                                        6.810       3
CEBR       16                      .003      16
CECI      257     .006     256     .003       1
       -------  ------- -------  ------- -------  ------- -------  ------- -------  ------- -------  ------- -------  ------- -------
TOTAL     276     .006     256     .003      17                                      6.810       3
```

Figure 3-33 Exception Summary report

3.5 Transaction Resource Usage reports

The Transaction Resource Usage reports are:

- File Usage Summary report
- The Temporary Storage Usage Summary report
- The Transaction Resource Usage List report

3.5.1 File Usage Summary report

The Transaction File Usage Summary report summarizes file usage by transaction ID. For each transaction ID, it gives transaction information and file control statistics followed by a breakdown of file usage for each file used. Figure 3-34 shows the report options.

```
                        REDBOOK - File Usage Summary Report
Command ===> ____________________________________________________________

System Selection:                        Report Output:
 APPLID . . SCSCPAA5  +                   DDname . . . . . . . . . FILE0001
 Image  . . ________  +                   Print Lines per Page . . ___ (1-255)
 Group  . . ________  +

Summary Reports Required:
 /  Transaction File Usage
 /  File Usage
    /  Break down by Transaction ID
    /  Include Transaction Totals

Report Format:
 Title  . . ____________________________________________________________
            ____________________________________________________________

Selection Criteria:
 _  Performance
```

Figure 3-34 Transaction Resource Usage: File Usage Summary report options

Report format

Figure 3-35 shows an example of the File Usage Summary report. This report summarizes file activity. For each file, it gives a breakdown of file usage by transaction ID.

```
V1R3M0                                          CICS Performance Analyzer
                                                     File Usage Summary

 FILE0001 Printed at 11:00:52  7/26/2003    Data from 07:30:47  5/29/2003 to 08:35:48  5/29/2003    APPLID CICSPA1       Page     2

                                      ********************** FC Calls ******************** ******** I/O Waits *******  AccMeth
  File            Tran  #Tasks            Get      Put    Browse    Add     Delete   Total     File     RLS      CFDT   Requests
  --------        ---- -------          -------- -------- -------- -------- -------- -------- -------- -------- -------- --------
  STOCK1          STOK       9 Elapse Avg    .1907    .0045    .0170    .0154    .0094    .2544    .2452    .0000    .0000
                                      Max   1.4601    .0110    .1195    .0458    .0358   1.6370   1.5718    .0000    .0000
                                Count Avg       48        0      506        2        1      568       65        0        0      595
                                      Max      369        7     4354        9        4     4739      426        0        0     4925

                  ORDR       4 Elapse Avg    .6174    .0000 10139.51    .0000    .0000 10140.44   1.2854    .0000    .0000
                                      Max    .8421    .0000 40557.78    .0000    .0000 40557.78   1.3365    .0000    .0000
                                Count Avg      162        0     3273        0        0     3600      356        0        0     3754
                                      Max      217        0     3273        0        0     3710      356        0        0     3754

                  Totl      13 Elapse Avg    .3220    .0031 3119.862    .0107    .0065 3120.313    .5653    .0000    .0000
                                      Max   2.4697    .0401 40558.06    .1390    .0842 40561.78   5.1415    .0000    .0000
                                Count Avg       83        0     1357        1        0     1501      154        0        0     1567
                                      Max      651        7    13092       23       12    14403     1424        0        0    15016
```

Figure 3-35 Transaction Resource Usage: File Usage Summary report

3.5.2 Temporary Storage Usage Summary report

The Transaction Temporary Storage Usage Summary report summarizes temporary storage queue usage by transaction ID. For each transaction ID, it gives transaction information and temporary storage statistics followed by a breakdown of Tsqname usage for each temporary storage queue used.

The Temporary Storage Usage Summary report summarizes Tsqueue activity. For each Tsqueue, it gives a breakdown of Temporary Storage Queue usage by transaction ID. Figure 3-36 shows the report options.

```
                    REDBOOK - Temporary Storage Summary Report
Command ===> ____________________________________________________________

System Selection:                        Report Output:
 APPLID . . SCSCPAA5  +                   DDname . . . . . . . . . FILE0001
 Image  . . ________  +                   Print Lines per Page . . ___ (1-255)
 Group  . . ________  +

Summary Reports Required:
 /  Transaction Temporary Storage Usage
 /  Temporary Storage Usage
    /  Break down by Transaction ID
    /  Include Transaction Totals

Report Format:
 Title  . . ____________________________________________________________
            ____________________________________________________________

Selection Criteria:
 _  Performance
```

Figure 3-36 Transaction Resource Usage: Temporary Storage Summary report options

Report format

Figure 3-37 shows the Temporary Storage Usage Summary report.

```
V1R3M0                                        CICS Performance Analyzer
                                            Temporary Storage Usage Summary

  TEMP0001 Printed at 11:00:52  7/26/2003    Data from 07:30:47  5/29/2003 to 08:35:48  5/29/2003    APPLID CICSPA1        Page    1

                                          ************* TS Calls ************ *** I/O Waits ***          ******** TS Item *********
   TSQueue         Tran  #Tasks             Get    Put_Aux  Put_Main  Total      TS     Shr_TS             Get   Put_Aux  Put_Main
  ---------------- ---- -------            -------- -------- -------- -------- -------- --------         -------- -------- --------
  TS_QUEUE1        CEDA       9 Elapse Avg    .0104    .0000    .0002    .0106    .0000    .0139
                                     Max    .0104    .0000    .0002    .0104    .0000    .0139
                                Count  Avg        2        0        6        8        0       10               56       44      378
                                       Max        3        0       12       12        0       17  Length      112       88      756

                   CSSY       4 Elapse Avg    .0104    .0000    .0002    .0000    .0000    .0139
                                     Max    .0104    .0000    .0002    .0000    .0000    .0139
                                Count  Avg        2        0        6        8        0       10               56       44      378
                                       Max        3        0       12       12        0       17  Length      112       88      756

                   Totl      13 Elapse Avg    .0104    .0000    .0002    .0000    .0000    .0139
                                     Max    .0104    .0000    .0002    .0000    .0000    .0139
                                Count  Avg        2        0        6        8        0       10               56       44      378
                                       Max        3        0       12       12        0       17  Length      112       88      756
```

Figure 3-37 Transaction Resource Usage: Temporary Storage Summary report

3.5.3 Transaction Resource Usage List report

The Transaction Resource Usage List report provides a list of all transaction resource class records in the sequence that they appear in the SMF file. It gives transaction information, detailing their individual file and temporary storage queue usage. Figure 3-38 shows the report options.

```
                  REDBOOK - Transaction Resource Usage Report
Command ===> ____________________________________________________________

System Selection:                        Report Output:
 APPLID . . ________  +                   DDname . . . . . . . . . RESU0001
 Image  . . ________  +                   Print Lines per Page . . ___  (1-255)
 Group  . .           +

Detailed List Reports Required:
 /  File Usage
 /  Temporary Storage

Report Format:
 Title  . . ____________________________________________________________
            ____________________________________________________________

Selection Criteria:
 _  Performance
```

Figure 3-38 Transaction Resource Usage List report options

Report format

Figure 3-39 shows an example of the Transaction Resource Usage List report.

```
V1R3M0                                          CICS Performance Analyzer
                                               Transaction Resource Usage List

 RESU0001 Printed at 11:00:52  7/26/2003    Data from 07:30:47  5/29/2003                                          Page       1

                                          Request          Fcty  Conn                                     UOW R            Response
 Tran  Userid  SC TranType Term   LUname   Type   Program  T/Name Name      NETName       APPLID    Task Seq T   Stop Time    Time
 ---- -------- -- -------- ----  -------- ------- -------- ------ ---- ----------------- --------   ---- --- - ------------ --------
 CEDA CBAKER   TO U        0015  IG2Z0015 AP:     DFHEDAP  T/0015      GBIBMIYA.IG2Z0015 IYK2Z1V1     68   1 T  8:23:18.514  86.2698

                                 ********************** FC Calls ********************** ******* I/O Waits ********  AccMeth
       File                        Get      Put     Browse    Add     Delete   Total     File     RLS      CFDT   Requests
      --------                   -------- -------- -------- -------- -------- -------- -------- -------- -------- --------
      DFHCSD                Elapse   1.4601    .0062    .1195    .0239    .0122   1.6370   1.5718    .0000    .0000
                            Count       369        1     4354        4        2     4739      426        0        0     4925

                                 ************* TS Calls ************ *** I/O Waits ***          ********* TS Item ********
       TSQueue                     Get    Put_Aux Put_Main  Total      TS     Shr_TS              Get    Put_Aux Put_Main
      ----------------           -------- -------- -------- -------- -------- --------          -------- -------- --------
      TS_QUEUE1             Elapse    .0104    .0000    .0002    .0000    .0000    .0139
                            Count         3        0       12        0        0       17  Length       112       88      756

 ---- -------- -- -------- ----  -------- ------- -------- ------ ---- ----------------- --------   ---- --- - ------------ --------
 CEDA CBAKER   TO U        0015  IG2Z0015 AP:     DFHECIP  T/0015      GBIBMIYA.IG2Z0015 IYK2Z1V1     83   1 T  8:27:58.141 103.0988

                                 ********************** FC Calls ********************** ******* I/O Waits ********  AccMeth
       File                        Get      Put     Browse    Add     Delete   Total     File     RLS      CFDT   Requests
      --------                   -------- -------- -------- -------- -------- -------- -------- -------- -------- --------
      CBFILEA               Elapse    .0000    .0000    .0000    .0000    .0000    .0000    .0000    .0000    .0000
                            Count         0        0        0        0        0        1        0        0        0        2

      CBFILEB               Elapse    .0000    .0000    .0000    .0000    .0000    .0000    .0000    .0000    .0000
                            Count         0        0        0        0        0        1        0        0        0        2

      CBFILEC               Elapse    .0000    .0000    .0000    .0000    .0000    .0000    .0000    .0000    .0000
                            Count         0        0        1        0        0        2        0        0        0        3

      Total                 Elapse    .0000    .0000    .0000    .0000    .0000    .0000    .0000    .0000    .0000
                            Count         0        0        1        0        0        4        0        0        0        7

                                 ************* TS Calls ************ *** I/O Waits ***          ********* TS Item ********
       TSQueue                     Get    Put_Aux Put_Main  Total      TS     Shr_TS              Get    Put_Aux Put_Main
      ----------------           -------- -------- -------- -------- -------- --------          -------- -------- --------
      TS_QUEUE2             Elapse    .0104    .0000    .0002    .0000    .0000    .0139
                            Count         3        0       12        0        0       17  Length       112       88      756

      TS_QUEUE3             Elapse    .0104    .0000    .0002    .0000    .0000    .0139
                            Count         3        0       12        0        0       17  Length       100       10      700

      Total                 Elapse    .0208    .0000    .0004    .0000    .0000    .0278
                            Count         6        0       24        0        0       34  Length       212       98     1456
```

Figure 3-39 Transaction Resource Usage: List report

3.6 Subsystem reports

The Subsystem reports are:

- DB2 report
- The WebSphere MQ report

3.6.1 DB2 report

The CICS PA DB2 report combines the CICS CMF performance class records (SMF 110) with the DB2 Accounting records (SMF 101) that belong to the same network unit of work, including some DB2 activity. It can provide a detailed, summary, or detailed summary report showing DB2 usage for your CICS systems.

The DB2 reports are:

- List
- Summary (short or long)
- Recap (record processing statistics)

To produce the DB2 reports, you need to accumulate DB2 accounting statistics (SMF 101 records) and define your CICS-DB2 resources with ACCOUNTREC(TASK) or ACCOUNTREC(UOW). CICS PA V1R3 supports the DB2 accounting statistics data from DB2 Version 5, Version 6, and Version 7.

You can use the information provided in the CICS PA DB2 reports to assist in further analysis using DB2 performance reporting tools such as the DB2 Performance Monitor (DB2 PM).

The CICS PA DB2 List report is most effective when used in conjunction with the CICS PA Cross-System Work report. Figure 3-40 shows the report options.

```
                          REDBOOK - DB2 Report
Command ===> ____________________________________________________________

CICS System Selection:                  Report Output:
 APPLID . . SCSCPAA5  +                  DDname . . . . . . . . . DB2R0001
 Image  . . ________  +                  Print Lines per Page . . ___ (1-255)
 Group  . . ________  +

DB2 System Selection:                   Report Options:
 SSID . . . DB2P  +                      /  Process DB2 Accounting records
 Image  . . ________  +                  _  List records with no DB2 activity
 Group  . . ________  +                  /  Long Summary with DB2 maximums

Reports              ----- DB2 Accounting data to include in report ------
Required:            Class1  Class2  Class3  Buffer  Locking  DML 1  DML 2
 _  List              /       /       _       /       /        _      _
 _  Long Summary      /       /       _       /       /        _      _
 /  Short Summary

Report Format:
 Title  . . ____________________________________________________________
            ____________________________________________________________

Selection Criteria:
 _  Performance
```

Figure 3-40 DB2 report options

Report format

Figure 3-41 shows the DB2 List report. This report provides a detailed list by transaction of all network units of work with DB2 activity. Records that are part of the same network unit of work are printed sequentially in groups with a blank line separator. A data line (column format) is presented for each CMF performance class record. A block of data lines (row format) is presented for each associated DB2 Accounting record.

The DB2 Long Summary report summarizes DB2 activity by transaction and program (CMF performance records), and SSID and Plan name (DB2 accounting records) within APPLID. Average and maximum values are reported for each. This report represents a subset of the total data presented in the DB2 List report. It includes DB2 data that can be matched within network unit of work to a single task, or to multiple tasks for the same transaction and program.

The DB2 Short Summary report is an abridged version of the Long Summary report. It provides averages only (no maximums). Both the CMF performance and DB2 accounting record details are presented in column format.

The DB2 Recap report is always produced at the end to provide an analysis of the CICS CMF performance class (SMF 110) and the DB2 Accounting (SMF 101) records processed.

```
V1R3M0                                                CICS Performance Analyzer
                                                          DB2 - List
DB2R0001 Printed at 10:14:46  10/23/2002    Data from 13:31:17  10/22/2002 to 13:32:08  10/22/2002                        Page       1

Tran/ Userid/ Program/                 UOW R                ..DB2 Wait Time..   DB2    User CPU                          Response A
SSID  Authid  Planname  APPLID    Task Seq T Term  LUName   Connect  Thread   ReqCnt    Time     Start Time    Stop Time    Time   B

WROS CICSLS   CRWWPPOS STM4IRA1  34695   1 T <ADQ STM4IRT1    .0000    .0000       18    .3112  13:31:23.053 13:31:34.349  11.2956

CH1G STM4IRA1 CRWWPPOS STM4IRA1  34695  Thread Identification   ID=ENTRWROS0037  NETName=USIBMSY.LE000081   UOWID=16372A6C7E14
                                                                Begin Time: 13:31:23.056  1/24/02  End Time: 13:31:35.378  1/24/02
                                        Class1: Thread Time     Elapsed= 12.3218  CPU= .310480
                                        Class2: In-DB2 Time     Elapsed= 11.2359  CPU= .309914
                                        Class3: Suspend Time    Total  =  6.5988  I/O=  2.3726  Lock/Latch=  4.2262
                                        Buffer Manager Summary  GtPgRq=    8120  SyPgUp=       8
                                        Locking Summary         Suspnd=      11  DeadLk=       0  TmeOut=       0  MxPgLk=       1
                                        SQL DML Query/Update    Sel=       2  Ins=       0  Upd=       0  Del=       0
                                        SQL DML 'Other'         Des=       0  Pre=       0  Ope=       3  Fet=      13  Clo=       0

WRNO CICSLS   CRWWPPNO STM4IRA1  34869   1 T <ACY STM4IRT1    .0000    .0000       67    .0114  13:31:38.853 13:31:45.875   7.0220

CH1G STM4IRA1 CRWWPPNO STM4IRA1  34869  Thread Identification   ID=ENTRWRN00051  NETName=USIBMSY.LE000081   UOWID=1637397E8927
                                                                Begin Time: 13:31:38.854  1/24/02  End Time: 13:31:45.808  1/24/02
                                        Class1: Thread Time     Elapsed=  6.9534  CPU= .010208
                                        Class2: In-DB2 Time     Elapsed=  6.8909  CPU= .008283
                                        Class3: Suspend Time    Total  =  6.3783  I/O=   .0000  Lock/Latch=  6.3783
                                        Buffer Manager Summary  GtPgRq=     173  SyPgUp=      36
                                        Locking Summary         Suspnd=       2  DeadLk=       0  TmeOut=       0  MxPgLk=      15
                                        SQL DML Query/Update    Sel=       1  Ins=      12  Upd=      11  Del=       0
                                        SQL DML 'Other'         Des=       0  Pre=       0  Ope=      12  Fet=      21  Clo=      10
```

Figure 3-41 DB2 List report

3.6.2 WebSphere MQ report

The CICS PA MQ reports use the WebSphere MQ accounting data (SMF 116 records) to provide a detailed performance analysis of the CICS transactions that access an MQ queue manager. CICS PA Version 1 Release 3 supports the WebSphere MQ accounting statistics data from MQSeries for OS/390 Version 5.2, IBM WebSphere MQ for z/OS Version 5.3, and IBM WebSphere MQ for z/OS Version 5.3.1.

The CICS PA MQ List reports provide a detailed trace of the WebSphere MQ accounting records, reporting the comprehensive performance data contained in the Class 1 and Class 3 records:

- **Class 1 (Subtype 0)**: Message manager accounting records, record how much CPU was spent processing WebSphere MQ API calls and the number of MQGET and MQPUT calls.
- **Class 3 (Subtypes 1 and 2)**: Accounting data for each task, at thread and queue level.

The MQ Summary reports provide, summarized by either CICS transaction ID, MQ queue name, or both, an analysis of the MQ system and queue resources used and the transactions they service.

Figure 3-42 shows the WebSphere MQ report options.

```
                          REDBOOK - WebSphere MQ Report
Command ===> ____________________________________________________________________
                                                                   More:     +
MQ System Selection:                    Report Output:
 SSID . . . ____  +                      DDname . . . . . . . . . DB2R0001
 Image  . . ________  +                  Print Lines per Page . . ___ (1-255)
 Group  . . ________  +

Reports Required:                       Process Accounting Class Records:
 _  List report                          1  1. Class 1
 /  Summary report                          2. Class 3

Sort Summary by:
 1  1. Transaction  2. Queue  3. Transaction/Queue  4. Queue/Transaction

Report Filter:
 Queue Name ________________________________________

Report Format:
 Title  . . ____________________________________________________________
            ____________________________________________________________

Selection Criteria:
 _  Performance
```

Figure 3-42 WebSphere MQ report options

Report format

The WebSphere MQ SupportPac *MP1B: MQSeries for OS/390 V5.2 - Interpreting accounting and statistics data* provides information about the use and interpretation of the accounting and statistics available in MQSeries for OS/390 Version 5.2 (and later). It also provides information about the layout of the SMF records and suggests ways to analyze the data.

Figure 3-43 shows the WebSphere MQ Class 1 List report.

```
V1R3M0                                          CICS Performance Analyzer
                                                WebSphere MQ Class 1 List

MQO00001 Printed at 14:42:16  8/13/2003  Data from 14:50:34 07/13/2003                                    Page       1


SSID  APPLID  Tran  Time         Task          CPU  -------------- GET Counts ------------- ------------- PUTx Counts -------------
                                                       <=99     <=999    <=9999   >=10000      <=99     <=999    <=9999   >=10000

MQMD CICS53A1 CKCN  14:50:34.88      35    0.000747         0         0         0         0         0         0         0         0
MQMD CICS53A1 MQA1  14:51:13.27      41    0.064342         0         0         0         0        60         0         0         0
MQMD CICS53A1 CKTI  14:51:24.52      37    0.001541         0         0         0         0         0         0         0         0
```

Figure 3-43 WebSphere MQ Class 1 List report

Figure 3-44 shows the WebSphere MQ Class 1 Summary report.

```
V1R3M0                                                  CICS Performance Analyzer
                                                       WebSphere MQ Class 1 Summary

MQ000003 Printed at 14:42:16  8/13/2003  Data from 14:50:34 07/13/2003 to 14:51:24 07/13/2003                      Page       1


                                 ----- Average -----  --------- Average GET Counts ---------   -------- Average PUTx Counts ---------
SSID  APPLID    TRAN     Count        CPU     Calls      <=99     <=999    <=9999   >=10000       <=99     <=999    <=9999   >=10000

MQMD  CICS53A1  CKCN         1   0.000747       0.0       0.0       0.0       0.0       0.0        0.0       0.0       0.0       0.0
MQMD  CICS53A1  CKTI         1   0.001541       0.0       0.0       0.0       0.0       0.0        0.0       0.0       0.0       0.0
MQMD  CICS53A1  MQA1         1   0.064342      60.0       0.0       0.0       0.0       0.0       60.0       0.0       0.0       0.0
```

Figure 3-44 WebSphere MQ Class 1 Summary report

Figure 3-45 shows the WebSphere MQ Class 3 List report.

```
V1R3M0                                                  CICS Performance Analyzer
                                                       WebSphere MQ Class 3 List
MQ000002 Printed at 14:42:16  8/13/2003  Data from 14:51:13 07/13/2003                                            Page       1


SSID: MQMD APPLID: CICS53A1 Tran: MQA1  Task:     41  UserID: CICSUSER  NetName: N/A              UOWID: N/A
Channel:                      Channel Connection:                                                 Start: 07/13/2003 14:51:13.12

  Other    Total Calls           1  Avg Elapsed   0.018721   Avg CPU      0.000258
           #Old Pages          120  #New Pages           0

  Queue: CPPX.MQS520.TEST.TEMPQUEUE.060
  QType: LOCAL    IType: NONE       GDisp: Q_MGR    Date: 07/13/2003  Time: 14:51:13  P/Set No:        4  BufferPool No:        3
  First Opened: 07/13/2003 14:51:13.25   Last Closed: 07/13/2003 14:51:13.25   CF Structure Name:

              Count     Elapsed      CPU      Susp Elp  JnlWrt Elp   PS Req's  PS Rd Elp   Expired   Page Skip  Msgs Skip
            _________ _________ _________ _________ _________ _________ _________ _________ _________ _________
    OPEN            1  0.000332  0.000327
    CLOSE           1  0.000113  0.000112
    PUT             1  0.000567  0.000560  0.000000   0.000000       0.0  0.000000

    PUT      Total Bytes         10  #PUT w/Data            1  Min Msg Size        10  Max Msg Siz         10

  Queue: CPPX.MQS520.TEST.TEMPQUEUE.059
  QType: LOCAL    IType: NONE       GDisp: Q_MGR    Date: 07/13/2003  Time: 14:51:13  P/Set No:        4  BufferPool No:        3
  First Opened: 07/13/2003 14:51:13.25   Last Closed: 07/13/2003 14:51:13.25   CF Structure Name:

              Count     Elapsed      CPU      Susp Elp  JnlWrt Elp   PS Req's  PS Rd Elp   Expired   Page Skip  Msgs Skip
            _________ _________ _________ _________ _________ _________ _________ _________ _________ _________
    OPEN            1  0.000271  0.000267
    CLOSE           1  0.000113  0.000112
    PUT             1  0.000507  0.000500  0.000000   0.000000       0.0  0.000000

    PUT      Total Bytes         10  #PUT w/Data            1  Min Msg Size        10  Max Msg Siz         10
```

Figure 3-45 WebSphere MQ Class 3 List report

Figure 3-46 shows the WebSphere MQ Class 3 Summary report sorted by TRAN and QUEUE.

```
V1R3M0                                                    CICS Performance Analyzer
                                                 WebSphere MQ Class 3 Summary     (By TRAN,QUEUE)
MQ000006 Printed at 14:42:16  8/13/2003  Data from 14:50:34 07/13/2003 to 14:51:24 07/13/2003                        Page       1


SSID: MQMD  APPLID: CICS53A1  Tran: CKTI  Threads:         1
  Other     Avg Count               1.0   Avg Elapsed    0.000895  Avg CPU      0.000370

SSID: MQMD  APPLID: CICS53A1  Tran: MQA1  Threads:         1
  Other     Avg Count               1.0   Avg Elapsed    0.018721  Avg CPU      0.000258
            Avg #Old Pages        120.0   Avg #New Pages      0.0

  Queue: CPPX.MQS520.TEST.TEMPQUEUE.001
  QType: LOCAL    IType: NONE       GDisp: Q_MGR    QCount:         1

                Count     Elapsed      CPU      Susp Elp  JnlWrt Elp   PS Req's  PS Rd Elp   Expired   Page Skip  Msgs Skip
               ________  ________  ________  ________  __________  ________  ________  ________  ________  ________
    OPEN           1.0   0.000480   0.000472
    CLOSE          1.0   0.000122   0.000121
    PUT            1.0   0.000657   0.000562   0.000000    0.000000        0.0   0.000000        0.0        0.0        0.0

    PUT      Avg Bytes          10.0  Avg #PUT w/Data      1.0   Min Msg Size        10  Max Msg Size        10
```

Figure 3-46 WebSphere MQ Class 3 Summary report (by TRAN,QUEUE)

3.7 System reports

The System report category includes the System Logger report.

3.7.1 System Logger report

The System Logger reports process the System Logger (SMF 88) records to provide information about the System Logger log streams and coupling facility structures that are used by CICS Transaction Server for logging, recovery and backout operations.

The CICS PA System Logger reports, when used in conjunction with the CICS Logger reports produced by the standard CICS statistics reporting utilities, provide a comprehensive analysis of the logstream activity for all your CICS systems. They also provide a more extensive and flexible performance reporting solution than the IXGRPT1 sample program.

Figure 3-47 shows the report options.

```
                    REDBOOK - System Logger Report
Command ===> ____________________________________________________________

System Selection:                        Report Output:
 Logger . . SCSCPAA5  +                   DDname . . . . . . . . . LOGR0001
 Image  . . MVS1____  +
 Group  . . ________  +

Reports Required:                        Report Options:
 /  Summary                               1  1. Sort by Logstream Name
 _  List   _  Include ALTER records          2. Sort by Structure Name
           _  Sort by Time
Report Filter:
 Logstream Name . . . *.*.JOBS*____________
 Structure Name . . . ________________

Report Format:
 Title  . . ____________________________________________________________
            ____________________________________________________________
```

The masking characters % and * are allowed

Figure 3-47 System Logger report options

You can request a List report, a Summary report, or both. The System Logger List report shows information about logstream writes, deletes, and events (Subtype 1), as well as *structure alter events* (Subtype 11) for each SMF recording interval. Structure alter events apply to structures, not individual log streams. They are reported with a logstream name of *ALTER*. The report is sorted either on logstream name or structure name.

The System Logger (SMF 88) records can be filtered by logstream, structure, or both name patterns. The masking characters % and * are also supported.

The System Logger Summary report summarizes logstream and structure statistics so that you can measure logger performance over a longer period of time.

Report format

Figure 3-48 shows the System Logger - Logstream Summary report.

```
V1R3M0                                                CICS Performance Analyzer
                                                 System Logger - Logstream Summary
LOGR0001 Printed at 16:10:07  10/23/2002     Data from 22:55:00:00  10/22/2002 to 23:55:00:00  10/22/2002                 Page      61

Logstream name              MVSID  Structure name          First interval start    Last interval stop      Total Interval
IYOT1.DFHLOG                SYSD   LOG_JG_20M              23:00:00.00  1/05/2002  23:46:22.38  1/05/2002      0000:46:22

           ----------- IXGWRITES ----------                ---------------- DELETIONS -----------------
                                                  Bytes       Count       Count       Bytes       Bytes
                                                Writn to        With     Without       After    Int Stor
                        Total     Average      Interim        DASD        DASD     Offload    w/o DASD
              Count     Bytes       Bytes      Storage       Write       Write     w. DASD       Write
           --------   --------   --------    --------   --------   --------   --------   --------
Total        628147    172706K        275      301535K     216244     467717     59484K    128572K
Rate(/Sec)      225      62080                  108388         77        168      21382      46216
Minimum           4       4292                    4864          0          0          0          0
Maximum       94200     25898K                  45218K      32740      71810    9004730     19739K

           ------------------------------------------ EVENTS ------------------------------------------
                                 Demand                                                          Demand
                        Staging    DASD       Block     Staging      Entry     Struct     Init'd
           Offloads    Threshld  Shifts      Length        Full       Full       Full   Offloads
           --------   --------   --------    --------   --------   --------   --------   --------
Total           314          0       78                      0          0          0          0
Rate(/Sec)        0          0        0                      0          0          0          0
Minimum           0          0        0         116          0          0          0          0
Maximum          48          0       12        1427          0          0          0          0

           ------------------------ EVENTS -------------------------    --------------- DASD Writes ---------------
                                                  Struct     Struct
                                                Rebuilds   Rebuilds                    Total
              Type1      Type2      Type3      Init'd    Complt'd      Count      Bytes     Average      Waits
           --------   --------   --------    --------   --------   --------   --------   --------   --------
Total        612865      15277          5          0          0        551     68133K          0        315
Rate(/Sec)      220          5          0          0          0          0      24491                     0
Minimum           4          0          0          0          0          0          0                     0
Maximum       91995       2458          5          0          0         84     10314K                    48
```

Figure 3-48 System Logger - Logstream Summary report

Figure 3-49 shows the System Logger - Structure Summary report.

```
V1R3M0                                                CICS Performance Analyzer
                                                  System Logger - Structure Summary
LOGR0001 Printed at 16:10:07  10/23/2002     Data from 22:55:00:00  10/22/2002 to 23:55:00:00  10/22/2002                Page      67

Structure name         MVSID       First interval start    Last interval stop                  Total Interval
LOG_JG_20M             SYSD        23:00:00.00  1/05/2002  23:46:45.67  1/05/2002                  0000:46:45

           ----------- IXGWRITES ----------                ---------------- DELETIONS -----------------
                                                 Bytes       Count       Count       Bytes       Bytes
                                               Writn to        With     Without       After    Int Stor
                          Total     Average     Interim        DASD        DASD     Offload    w/o DASD
              Count       Bytes       Bytes     Storage       Write       Write     w. DASD       Write
           --------    --------    --------    --------    --------    --------    --------    --------
Total       1895819      521260K         275      910084K     650666     1412682      179002K     388332K
Rate(/Sec)      675      185832                   324450        231         503       63815      138443
Minimum           0           0                        0          0           0           0           0
Maximum       95743       26322K                   45959K      32740       71811     9004730       19740K

           ---------------------------------------- EVENTS ----------------------------------------
                                 Demand                                                      Demand
                     Staging       DASD       Block     Staging       Entry      Struct     Init'd
           Offloads  Threshld     Shifts      Length        Full        Full        Full   Offloads
           --------  --------    --------    --------    --------    --------    --------    --------
Total           948         0         235                      0           0           0           0
Rate(/Sec)        0         0           0                      0           0           0           0
Minimum           0         0           0         116          0           0           0           0
Maximum          48         0          12        1427          0           0           0           0

           ----------------------- EVENTS -------------------------    --------------- DASD Writes ----------------
                                                Struct      Struct
                                              Rebuilds    Rebuilds                   Total
              Type1       Type2       Type3     Init'd    Complt'd       Count       Bytes     Average       Waits
           --------    --------    --------    --------    --------    --------    --------    --------    --------
Total       1850214       45600           5           0           0        1651      205029K           0         942
Rate(/Sec)      659          16           0           0           0           0       73094                       0
Minimum           0           0           0           0           0           0           0                       0
Maximum       93387        2508           5           0           0          84       10314K                      48
```

Figure 3-49 System Logger - Structure Summary report

3.8 Performance Graph reports

The Performance Graph reports are:

- Transaction Rate Graph report
- Transaction Response Time Graph report

3.8.1 Transaction Rate Graph report

The Transaction Rate Graph report shows, over the requested time interval, the average response time and the number of completed transactions. Figure 3-50 shows the report options.

```
                        REDBOOK - Transaction Rate Graph
Command ===> ____________________________________________________________

System Selection:                        Report Output:
 APPLID . . SCSCPAA5  +                   DDname . . . . . . . . . . GRTE0001
 Image  . . ________  +                   Print Lines per Page . . ___ (1-255)
 Group  . . ________  +

Graph Options:
 Time Interval  . . . . . . . . . . . . 5____  (minutes)
 Average Response Time  . . . . . . . . _____  (seconds)
 Number of Transactions Completed . . _____

Report Format:
 Title  . . ______________________________________________________________
            ______________________________________________________________

Selection Criteria:
 _  Performance
```

Figure 3-50 Transaction Rate Graph report options

Report format

Figure 3-51 shows the Transaction Rate Graph report.

```
 V1R3M0                                          CICS Performance Analyzer
                                                   Transaction Rate
GRTE0001 Printed at  9:16:07  10/22/2002    Data from  11:10:29  10/21/2002 to 11:34:00  10/21/2002 Page 1
  10/21/2002

  Time     Value |       Average Response Time in  Secs            |     Value |     Number of Transactions completed            |
HH.MM.SS         |    8   16   24   32   40   48   56   64   72   80          |    8   16   24   32   40   48   56   64   72   80
11:10:30         |----|----|----|----|----|----|----|----|----|----|          |----|----|----|----|----|----|----|----|----|----|
11:15:00     4.2 |***                                                      52 |********************************
11:20:00     2.8 |**                                                       70 |*******************************************
11:25:00     4.0 |***                                                      76 |************************************************
11:30:00     3.6 |**                                                       37 |**********************
11:34:00    75.0 |**********************************************          35 |**********************
```

Figure 3-51 Transaction Rate Graph report

3.8.2 Transaction Response Time Graph report

The Transaction Response Time Graph report shows the average and maximum response time. Figure 3-52 shows the report options.

```
                 REDBOOK - Transaction Response Time Graph
Command ===> ____________________________________________________________

System Selection:                        Report Output:
 APPLID . . SCSCPAA5  +                   DDname . . . . . . . . . . GRSP0001
 Image  . . ________  +                   Print Lines per Page . . ___ (1-255)
 Group  . . ________  +

Graph Options:
 Time Interval . . . . . . 5____  (minutes)
 Average Response Time . . _____  (seconds)
 Maximum Response Time . . _____  (seconds)

Report Format:
 Title  . . ____________________________________________________________
            ____________________________________________________________

Selection Criteria:
 _  Performance
```

Figure 3-52 Transaction Response Time Graph report options

Report format

Figure 3-53 shows the Transaction Response Time Graph report.

```
 V1R3M0                                          CICS Performance Analyzer
                                                   Response Time
GRSP0001 Printed at  9:16:07  10/22/2002    Data from  11:10:29  10/21/2002 to 11:34:00  10/21/2002                    Page       1
  10/21/2002

  Time     Value |       Average Response Time in  Secs            |     Value |     Maximum Response Time in  Secs              |
HH.MM.SS         |    8   16   24   32   40   48   56   64   72   80          |   140  280  420  560  700  840  980 1120 1260 1400
11:10:30         |----|----|----|----|----|----|----|----|----|----|          |----|----|----|----|----|----|----|----|----|----|
11:15:00     4.2 |***                                                    81.3 |***
11:20:00     2.8 |**                                                     95.1 |***
11:25:00     4.0 |***                                                   308.9 |***********
11:30:00     3.6 |**                                                     61.0 |**
11:34:00    75.0 |**********************************************     1,386.7 |**************************************************
```

Figure 3-53 Transaction Response Time Graph report

3.9 Performance extracts

The Performance extracts are:

- Cross-System Work extract
- Export extract
- Record Selection extract

3.9.1 Cross-System Work extract

The Cross-System Work extract consolidates the CMF performance class records that belong to the same network unit of work into a single record in CMF performance record format. You can then use the extract data set as input to other CICS PA reports or extracts such as a Performance List report or a Performance Data extract. Figure 3-54 shows the extract options.

All CMF fields are available for inclusion in the extract. In addition, you can specify which user fields you want to include.

To run the report for multiple systems, define them to a group. For information about how to do this, see “Groups this system belongs to” on page 33.

```
                    REDBOOK - Cross-System Work Extract
Command ===> ____________________________________________________________

System Selection:                          Extract Recap:
 APPLID . . ________  +                     DDname  . . . CROX0001
 Image  . . ________  +
 Group  . . MROPROD_  +   <-- Specify a group of systems

Output Data Set . . 'MROPROD.CROSSWK'_____________________________
Disposition  . . .  1  1. OLD   2. MOD    (If cataloged)

Processing Options:                              Record Formatting Options:
1  1. UOWs with more than one record              APPLID . . MULTIPLE
   2. UOWs with a single record                   MVS ID . . CICS
   3. All UOWs

Selection Criteria:                              Additional User Fields:
 S  Performance  *                                S  User Fields  *
 <-- Specify criteria to filter the data          <-- Select User Fields from a list
```

Figure 3-54 Cross-System Work extract options

Extract record format

Figure 3-55 shows an example of the Cross-System Work extract record:

- The extract records are written for the specified APPLID/MVS ID. The default is MULTIPLE/CICS.
- Transactions are identified by the originating task.
- Counters and elapsed times are combined to provide a complete view of a transaction’s CICS resource usage.

```
CICS Field              CICS CMF
Owner-Type-Id Length    Informal Name
------------- ------    -------------
DFHTASK  C001      4    TRAN
DFHTERM  C002      4    TERM
DFHCICS  C089      8    USERID
DFHTASK  C004      4    TTYPE
DFHCICS  T005      8    START
DFHCICS  T006      8    STOP
.
.
.
DFHTASK  S273      8    JVMITIME
DFHTASK  S275      8    JVMRTIME
DFHTASK  S285      8    PTPWAIT
CICSPA   A001      4    TOTRECS
CICSPA   A002      4    APPLRECS
CICSPA   A003      4    TRANROUT
CICSPA   A004      4    FUNCSHIP
CICSPA   A005      4    DPLRECS
.
.
.
```

Standard CICS monitoring fields

Special count fields added by CICS PA. They indicate the number of input records of each type that were combined to produce the extract record.

Any requested user fields are added here

Figure 3-55 Cross-System Work extract record format

Recap report

A Recap report is always produced to provide the total record count in the extract data set.

Using CICS PA to process the extract

You can input the Cross-System Work extract data set into CICS PA for further analysis. Figure 3-56 shows an example of the System Definitions screen after you define the Cross-System Work APPLID (MULTIPLE) and MVS ID (CICS) to CICS PA and associate the extract file with the APPLID. Then you can define report forms and report sets to run on this APPLID.

```
                          System Definitions                  Row 1 from 2
Command ===> ____________________________________________ Scroll ===> DATA

Select a System to edit its definition, SMF Files and Groups.
                                                              SMF Files
   System   Type     Image                Description         System
_  MULTIPLE CICS     CICS     Cross-System Work Extract System____ MULTIPLE
_  CICS     Image             Image inserted by System MULTIPLE___
********************************* End of list *********************************
```

Figure 3-56 Cross-System Work extract replaying through CICS PA

3.9.2 Export extract

The Export extract is created as a delimited text file for the purpose of importing the CMF performance class data into PC spreadsheet or database tools for further analysis and reporting. CICS PA supplies the column headings (if requested). The fields are separated by

a delimiter character of your choosing (the default is the semi-colon (;)). Figure 3-57 shows the extract options.

```
                              REDBOOK - Export
Command ===> ____________________________________________________________

System Selection:                          Extract Recap:
 APPLID . . SCSCPAA5  +                     DDname  . . . EXPT0001
 Image  . . ________  +
 Group  . . ________  +

Output Data Set . . . 'SCSCPAA5.EXPORT'____________________________
Disposition  . . .  1  1. OLD   2. MOD    (If cataloged)

Extract Format:                            Enter "/" to select option
 Form  . . . . _______  +                  /  Include Field Labels
 Delimiter . . ;                           _  Numeric Fields in Float format

Selection Criteria:                        Summary Processing Options:
 _  Performance  *                         Time Interval 00:01:00  (hh:mm:ss)
```

LIST, LISTX or SUMMARY Report Form

Figure 3-57 Export: extract options

Default extract record format

When a Report Form *is not* specified, the default Export record format contains these fields:

- APPLID: Generic APPLID
- Tran: Transaction ID
- Term: Terminal ID
- Userid: User ID
- Taskno: Transaction sequence number
- Stop Date: Transaction stop date (yyyy-mm-dd)
- Stop Time: Transaction stop time (hh:mm:ss.thm)
- Response: Transaction response time
- Clocks: All 65 clocks as defined by CICS Transaction Server for z/OS, Version 2.2

Figure 3-58 shows an example of the first part of the default record layout. Note that the field labels (column headings) are included in this extract. Field labels are optional.

```
APPLID  ;TRAN;TERM;USERID  ;  TASKNO; STOP DATE;  STOP TIME ;RESPONSE;DISPATCH;CPU     ;SUSPEND ;DISPWAIT;QRDISPT ;QRCPU   ;MSDISPT
SCSCPAA5;CSSY;    ;CICSLS  ;      16;1999-02-04;11:10:29.803;   .0139;   .0007;   .0006;   .0133;   .0000;   .0007;   .0006;   .0000
SCSCPAA5;CSSY;    ;CICSLS  ;      17;1999-02-04;11:10:29.809;   .0185;   .0010;   .0014;   .0175;   .0001;   .0010;   .0014;   .0000
SCSCPAA5;CSSY;    ;CICSLS  ;      18;1999-02-04;11:10:29.861;   .0674;   .0196;   .0027;   .0479;   .0269;   .0047;   .0019;   .0149
SCSCPAA5;CGRP;    ;CICSLS  ;      12;1999-02-04;11:10:30.194;   .4123;   .0420;   .0074;   .3702;   .3223;   .0177;   .0037;   .0243
SCSCPAA5;CSSY;    ;CICSLS  ;      15;1999-02-04;11:10:30.207;   .4204;   .0568;   .0100;   .3636;   .1744;   .0177;   .0064;   .0391
SCSCPAA5;CSSY;    ;CICSLS  ;      13;1999-02-04;11:10:30.456;   .6743;   .0728;   .0134;   .6015;   .4000;   .0215;   .0029;   .0512
SCSCPAA5;CSSY;    ;CICSLS  ;      10;1999-02-04;11:10:30.531;   .7498;   .1910;   .0228;   .5588;   .1997;   .0673;   .0089;   .1237
SCSCPAA5;CSSY;    ;CICSLS  ;      14;1999-02-04;11:10:31.121;  1.3344;   .3202;   .0378;  1.0142;   .2626;   .1978;   .0282;   .1224
SCSCPAA5;CSSY;    ;CICSLS  ;      11;1999-02-04;11:10:31.211;  1.4292;   .1497;   .0313;  1.2794;   .3461;   .0595;   .0216;   .0903
SCSCPAA5;CPLT;    ;CICSLS  ;       7;1999-02-04;11:10:45.642; 15.9915;   .3383;   .0369; 15.6532;   .0155;   .0143;   .0108;   .3240
SCSCPAA5;CSSY;    ;CICSLS  ;     III;1999-02-04;11:10:45.856; 16.0761;  9.3488;  2.3435;  6.7273;  1.1645;  3.7054;  1.9054;  5.6434
SCSCPAA5;CWBG;    ;CICSLS  ;      24;1999-02-04;11:10:46.196;   .0262;   .0248;   .0041;   .0013;   .0012;   .0016;   .0010;   .0232
SCSCPAA5;CRSQ;    ;CICSLS  ;      25;1999-02-04;11:10:46.856;   .0818;   .0449;   .0040;   .0369;   .0367;   .0012;   .0008;   .0438
SCSCPAA5;CXRE;    ;CICSLS  ;      27;1999-02-04;11:10:47.134;   .2255;   .0243;   .0049;   .2011;   .2009;   .0037;   .0016;   .0206
SCSCPAA5;CLR2;R11 ;CICSLS  ;      29;1999-02-04;11:10:48.317;   .0263;   .0030;   .0020;   .0232;   .0000;   .0030;   .0020;   .0000
SCSCPAA5;CSFU;    ;CICSLS  ;      26;1999-02-04;11:10:48.471;  1.6968;  1.5899;   .1136;   .1069;   .0294;   .2971;   .0253;  1.2928
SCSCPAA5;CSAC;SAMA;CICSLS  ;      31;1999-02-04;11:10:51.227;   .5217;   .0028;   .0011;   .5189;   .0002;   .0028;   .0011;   .0000
SCSCPAA5;CLQ2;    ;CICSLS  ;      28;1999-02-04;11:10:51.840;  3.8259;   .0818;   .0068;  3.7441;   .0035;   .0034;   .0025;   .0784
SCSCPAA5;CEMT;SAMA;CICSLS  ;      32;1999-02-04;11:10:51.942;   .1877;   .1842;   .0264;   .0035;   .0030;   .0041;   .0028;   .1801
SCSCPAA5;CEMT;SAMA;CICSLS  ;      33;1999-02-04;11:10:52.549;   .0091;   .0068;   .0026;   .0023;   .0001;   .0068;   .0026;   .0000
SCSCPAA5;CEMT;SAMA;CICSLS  ;      34;1999-02-04;11:10:53.074;   .0092;   .0068;   .0025;   .0024;   .0000;   .0068;   .0025;   .0000
```

Figure 3-58 Export: Default extract record format

Extract record tailoring (LIST, LISTX)

You can specify a LIST or LISTX Report Form to create an Export record in the same format as the corresponding Performance List report (see Figure 3-4 on page 66) or Performance List Extended report (see Figure 3-8 on page 69). Many sample Report Forms of type LIST or LISTX are provided with CICS PA for this purpose. Note that when you use a LISTX Form for the Export, it is used like a LIST Form. That is, the fields and the order of the columns are used, but the sort sequence is ignored. For more information about how to use Report Forms, see 2.10, “Tailoring report formats” on page 44.

Extract record tailoring (SUMMARY)

You can specify a SUMMARY Report Form to create an Export record in the same format as the corresponding Performance Summary report (see Figure 3-12 on page 71). Many sample Report Forms of type SUMMARY are provided with CICS PA for this purpose. For more information about how to use Report Forms, see 2.10, “Tailoring report formats” on page 44.

Recap report

A Recap report is always produced to give the total record count in the extract data set.

Processing the extract using different tools

The Export data set is a delimited text file. You can analyze this file further by using a program, such as DB2, or PC tools, such as Lotus 1-2-3 or Lotus Approach. Figure 3-59 is an example of a graph produced from the Summary Export data.

For more examples and descriptions of how to produce such graphs, see Chapter 4, “Processing extracts” on page 107.

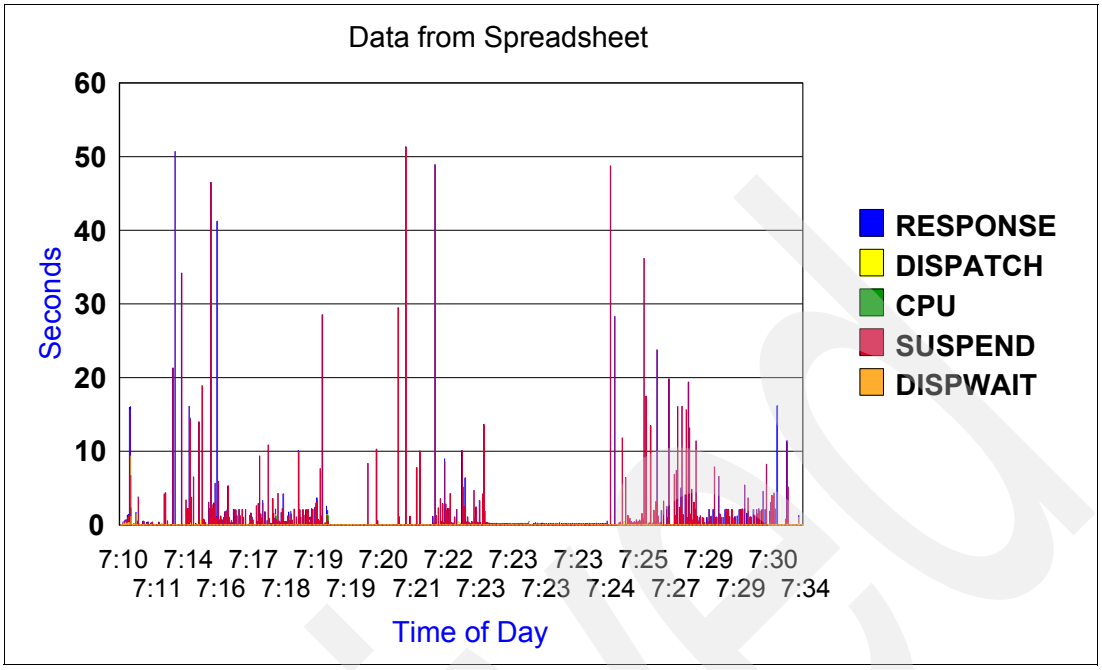

Figure 3-59 Export: Processing the extract data set using PC graphing tools

3.9.3 Record Selection extract

The Record Selection extract is a facility that allows you to create a smaller extract file containing only the CMF performance records (and optionally, the DB2 and WebSphere MQ accounting records) that are of interest to you. It is used to filter large SMF files. You can then use these files as input to CICS PA, for more efficient reporting and analysis. Figure 3-60 shows the extract options.

```
                    REDBOOK - Record Selection Extract
Command ===> ____________________________________________________________

System Selection:
 CICS APPLID . . SCSCPAA5  +  Image . . ________  +  Group . . ________  +
 DB2 SSID  . . . DB2P  +      Image . . ________  +  Group . . ________  +
 MQ SSID . . . . ____  +      Image . . ________  +  Group . . ________  +

Extract Recap:
 DDname  . . . RSEL0001

Output Data Set:
 Data Set Name  . . 'SCSCPAA5.DB2P.RECSEL'_______________________
 Disposition  . . . _  1. OLD   2. MOD   (If cataloged)

Selection Criteria:
 _  Performance
```

Figure 3-60 Record Selection Extract options

Extract record format

The extract file contains CMF performance records (SMF 110) and, if requested, DB2 Accounting records (SMF 101).

Recap report

A Recap report is always produced at the end of extract processing. Figure 3-61 shows how the Recap report summarizes the results of the extract processing.

```
V1R3M0                                                  CICS Performance Analyzer
                                                          Record Selection Extract
RSEL0001 Printed at 12:51:10 11/08/2002     Data from 10:21:56 11/07/2002 to 11:12:40 11/07/2002                    Page       1


CPAORS01 Extract has completed successfully
         Data Set Name   . . . . . CICSLS5.RECSEL.EXTRACT
         Record Counts:
           Performance Dictionary  .            2
           Performance Class     . .        3,908
           DB2 Accounting  . . . . .            0
           SMF Records . . . . . . .          208
```

Figure 3-61 Record Selection extract (Recap report)

3.10 Popular mix

Do not be daunted. You will soon learn what mix of reports works best for you for your ongoing monitoring and tuning efforts and for your management reporting.

A suggestion for monthly reporting and beyond is to use the Historical Database facility to maintain a history of CMF performance data for reporting or export to DB2 tables. See Chapter 19, “Historical Database” on page 415.

For daily reporting, we recommend:

- Performance Summary (1): Use a SUMMARY Report Form to show transaction count, response time, CPU, and so on, summarized by transaction within APPLID.
- Performance Summary (2): The same as Performance Summary (1), but summarized by transaction within a group (production, test, etc).
- Performance List Extended: Showing the top 20 poor response times, and so on, by transaction within APPLID.
- Wait Analysis.
- Exception Summary.
- DB2 or WebSphere MQ Summary.
- Logstream Summary.
- Performance Export: Process the extract using PC tools to produce graphs.

For weekly reporting, we recommend:

- Performance Summary: As for daily reporting; summarized by transaction within a group.
- Performance Totals: By Group.
- DB2 or WebSphere MQ Summary.
- Logstream Summary.
- Performance Export. Process the extract using DB2 or PC tools to produce graphs.

For monthly reporting, we recommend:

- Performance Summary: As for daily reporting; summarized by transaction within a group
- Performance Totals: By Group
- DB2 or WebSphere MQ Summary

4

Processing extracts

The CICS Performance Analyzer (PA) Export facility produces delimited text files of CICS Monitoring Facility (CMF) Performance and Transaction Resource Class data extracted from SMF data sets. The extract files are suitable for analysis by external programs such as DB2, or PC spreadsheet and graphing tools such as Lotus 1-2-3, Microsoft® Excel and Microsoft Access.

This chapter explains, by example, how to:

- Use the CICS PA Export facility to produce extract data sets in various formats
- Use the following programs and tools to process the extract data sets:
  - DB2
  - Lotus 1-2-3
  - Microsoft Excel
  - Microsoft Access

Methods such as these can enhance your understanding and interpretation of the data, facilitate comparisons, assist your analysis of trends, peaks and throughputs, help to isolate problems, and generally support your decision-making about the ongoing tuning and management of your CICS systems.

4.1 Processing extracts with DB2

CICS Performance Analyzer 1.3 introduced an easy way to generate data from SMF records in a form that it is suitable to be used as input for a DB2 load utility and to be imported into a DB2 table. Furthermore CICS PA generates the Data Definition Language (DDL) statements to create the required DB2 database, tablespace, table, and an index. Also the load job is generated by CICS PA.

This function is part of the Historical Database and is demonstrated in 19.4.5, “Export HDB data sets to DB2” on page 441.

4.2 Processing extracts with Lotus 1-2-3

A chart is an effective way to illustrate your performance data after it is placed in a spreadsheet. It can make relationships among numbers easy to see because it turns numbers into shapes. This section shows how to create a chart based on performance data that was extracted using the CICS Performance Analyzer.

4.2.1 Exporting performance extracts

From the Primary Option Menu, select option 2 (Report Sets). The Report Sets screen shows a list of Report Sets that were already created. Refer to 2.7.2, “Report Sets” on page 36, for a description of how to create a Report Set.

We typed line action `S` next to Report Set VSAMSUM. This displays the Edit Report Set screen. Report Set VSAMSUM was created when we ran the VSAM performance scenario described in Chapter 6, “VSAM application performance analysis and Transaction Resource Monitoring support” on page 139.

On the Edit Report Set screen, we checked that no active reports were selected. Active reports are indicated by a *yes* after the report name. You can use line action D to deactivate the report. After that, we selected the item Export form the Extracts group. The Exports screen appears and displays a list of selections from our previous extract exports. Figure 4-1 shows the Export screen containing a list of systems to select from.

```
                              VSAMSUM - Exports                    Row 1 from 3
 Command ===>                                                  Scroll ===> CSR_

      ---- System Selection -----                          Selection
 / Exc APPLID +  Image +  Group +    Recap      Form +     Criteria
      SCSCPAA1  SC66                EXPT0001   VSAMEL       YES

      Output Data Set . .  LOTUS123
 ------------------------------------------------------------------------------
      SCSCPAA1  SC66                EXPT0001   VSAMSUM      YES

      Output Data Set . .  MSACCESS
 ------------------------------------------------------------------------------
      SCSCPAA1  SC66                EXPT0001   VSAM         YES

      Output Data Set . .  MSEXCEL
 ------------------------------------------------------------------------------
```

Figure 4-1 Performance extract export

We selected system SCSCPAA1 using output data set LOTUS123. This opens an Export screen that allows you to edit export detail information. If you do not see a screen like the one shown in Figure 4-1, then this may be the first performance extract export that bypasses the list of previous exports and displays the screen shown in Figure 4-2 directly.

We updated the following information on the Export detail screen:

- CICS APPLID `SCSCPAA1`
- Extract data set `LOTUS123`
- Report form `VSAMSUM`

```
                                VSAMSUM - Export
Command ===>

System Selection:                        Extract Recap:
 APPLID . . SCSCPAA1  +                   DDname  . . . EXPT0001
 Image  . . SC66      +
 Group  . .           +

Output Data Set:
 Data Set Name  . . LOTUS123
 Disposition  . . . 2  1. OLD   2. MOD   (If cataloged)

Extract Format:                          Enter "/" to select option
 Form  . . . . VSAMSUM   +               /  Include Field Labels
 Delimiter . . ;                            Numeric Fields in Float Format

Selection Criteria:                      Summary Processing Options:
    Performance                           Time Interval 00:01:00  (hh:mm:ss)
```

Figure 4-2 Extract details

CICS system definition SCSCPAA1 must specify a valid SMF data set name that contains some SMF records to produce a performance extract. Refer to “SMF Files for this system” on page 33 for a description about how to define SMF data sets on system definitions.

We used Report Form VSAMSUM. It was created during the VSAM performance scenario project described in Chapter 6, “VSAM application performance analysis and Transaction Resource Monitoring support” on page 139. To demonstrate how to create charts, you can use any Report Form that has time or count fields.

We pressed F3 until we returned to the Report Set screen. We typed `RUN` to create and submit the JCL to process the performance extract export. When the job has completed, the extracted data was stored to data set CICSLS4.LOTUS123 (Figure 4-3).

```
   Menu  Utilities  Compilers  Help
 ________________________________________________________________________________________________________________________
 BROWSE    CICSLS4.Lotus123                                                                   Line 00000000 Col 001 132
 Command ===>                                                                                          Scroll ===> PAGE
********************************************************** Top of Data ***********************************************************
Tran;Response Avg;Response Max;Dispatch Time Avg;User CPU Time Avg;Suspend Time Avg;FC Total Avg;RLS Wait Time Avg;FC Wait Time Avg;
HX1     ;   .0878;   .4659;   .0027;   .0018;   .0851;       2;   .0000;   .0093;       0;       0;       0;       1;       1
IX1     ;   .0100;   .1757;   .0041;   .0025;   .0058;       0;   .0000;   .0000;       0;       0;       0;       0;       0
IX2     ;   .9831;  2.9364;   .0054;   .0040;   .9777;      17;   .0000;   .0937;       0;       0;       0;      17;       0
IX8     ;  1.8818;  6.6992;   .0055;   .0038;  1.8763;      14;   .0000;   .1745;       3;       0;       0;       9;       2
PX2     ;  1.0209;  3.2356;   .0063;   .0040;  1.0146;      18;   .0000;   .0422;       0;       0;       0;      18;       0
PX3     ;  2.3924;  9.5941;   .0070;   .0050;  2.3853;      34;   .0000;   .0220;       0;       0;       0;      34;       0
SX2     ;   .6419;  2.2321;   .0055;   .0042;   .6364;      18;   .0000;   .0675;       0;       0;       0;       9;       9
SX4     ;   .7818;  2.7859;   .0043;   .0034;   .7775;       9;   .0000;   .0364;       9;       0;       0;       0;       0
SX6     ;   .2384;  1.4432;   .0030;   .0021;   .2353;       4;   .0000;   .0190;       1;       0;       1;       2;       0
TX1     ;   .0030;   .1027;   .0015;   .0011;   .0015;       0;   .0000;   .0000;       0;       0;       0;       0;       0
********************************************************* Bottom of Data *********************************************************
```

Figure 4-3 Performance extract

We used file transfer to download the performance extract to a Windows 2000 workstation. The file was stored to directory c:\reports\lotus1-2-3\lotus_chart.txt. Note that the title line of the extracted data is not aligned with the columns. Lotus 1-2-3 aligns the delimiters during the import process.

4.2.2 Importing extracted data to Lotus 1-2-3

To import the extracted performance data to Lotus 1-2-3, we clicked **Start->Lotus Smart Suite->Lotus 1-2-3**. When the Lotus 1-2-3 main window opened, we clicked **File->Open**. A window opens that allows the navigation to the directory which contains our text file. We double-clicked our file, **lotus_chart.txt**.

The Text File Options window (Figure 4-4) opens. We selected the **Start a new column at each** radio button and selected **Semicolon** from the list in the text box. We had to do that since we used a semicolon as delimiter character when we exported the performance extract. We clicked **OK** to continue.

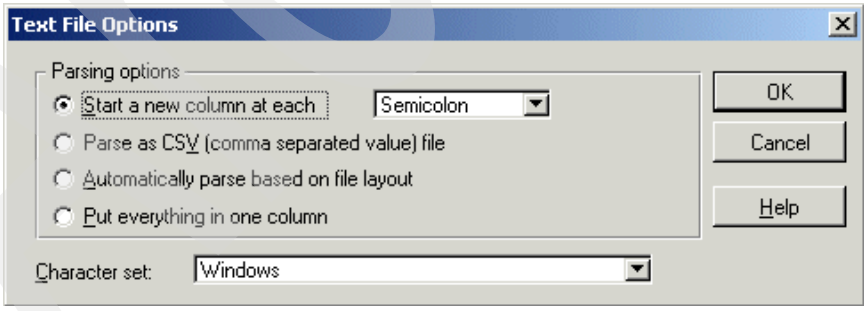

Figure 4-4 Text File Options window

Lotus 1-2-3 imported our performance data and displayed a data sheet (Figure 4-5) that corresponds with the columns of our performance extract. We create a chart that visually illustrates a comparison of average response time and maximum response time per transaction of our VSAM workload.

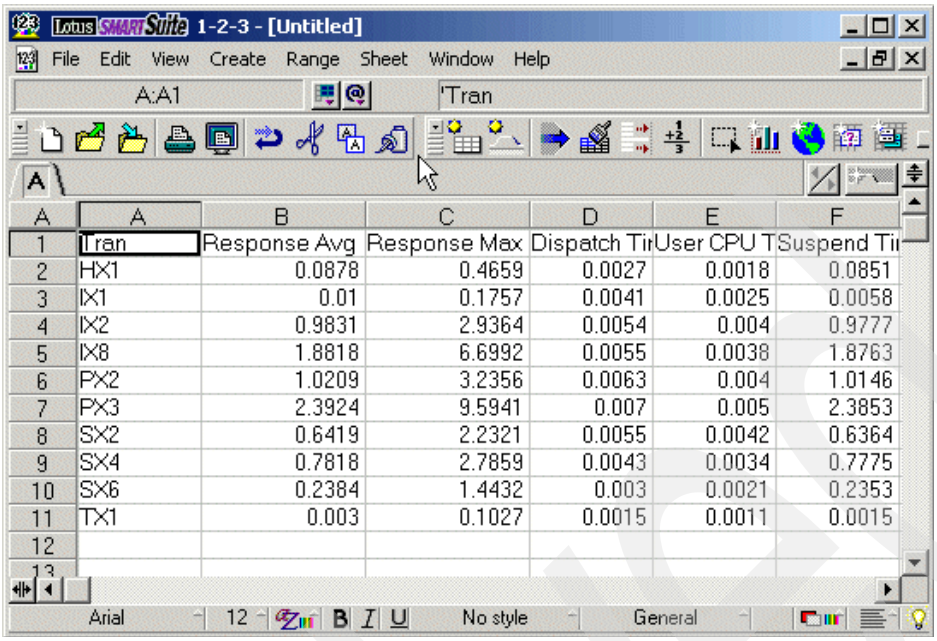

	A	B	C	D	E	F
1	Tran	Response Avg	Response Max	Dispatch Ti	User CPU T	Suspend Ti
2	HX1	0.0878	0.4659	0.0027	0.0018	0.0851
3	IX1	0.01	0.1757	0.0041	0.0025	0.0058
4	IX2	0.9831	2.9364	0.0054	0.004	0.9777
5	IX8	1.8818	6.6992	0.0055	0.0038	1.8763
6	PX2	1.0209	3.2356	0.0063	0.004	1.0146
7	PX3	2.3924	9.5941	0.007	0.005	2.3853
8	SX2	0.6419	2.2321	0.0055	0.0042	0.6364
9	SX4	0.7818	2.7859	0.0043	0.0034	0.7775
10	SX6	0.2384	1.4432	0.003	0.0021	0.2353
11	TX1	0.003	0.1027	0.0015	0.0011	0.0015
12						

Figure 4-5 Lotus 1-2-3 data sheet

Lotus 1-2-3 provides a convenient way to create basic charts. You can set up a range so that it contains all the elements you need to create a basic chart.

The range that we wanted to use has text and numbers arranged as in A1-C11 as illustrated in Figure 4-5. Lotus 1-2-3 plots the chart based on range A1-C11 by column. Lotus 1-2-3 automatically creates a bar chart if columns A1-C11 are selected as the data range.

It is also possible to insert two additional rows, containing the title and subtitle of the chart, in front of the data sheet. The new data range is then A1-C13. We decided that it is more convenient to alter the chart afterward rather than to modify the data sheet. Figure 4-6 shows how we selected the data range from which we wanted to create the chart.

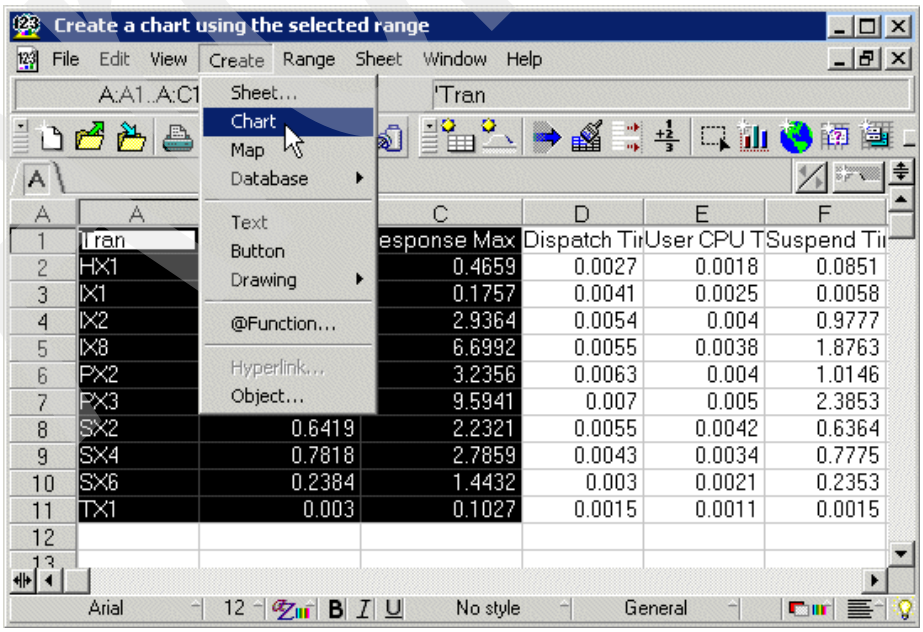

Figure 4-6 Creating a chart

The data range comprises A1 to C11, so we have more rows than columns. This influences the way the chart is built automatically. Lotus 1-2-3 builds charts automatically in the following ways:

- More columns than rows: By interpreting each row of values as a separate series, Lotus 1-2-3 uses the leftmost entry in each row as a legend label and the top entry in each column as an axis label.
- More rows than columns: By interpreting each column of values as a separate series, Lotus 1-2-3 uses the top entry in each column as a legend label and the leftmost entry in each row as an axis label.
- Equal rows and columns: This situation is handled in the same way as when there are more rows than columns.

We clicked **Create->Chart** and dropped the chart icon into the selected data range. The chart was built automatically as shown in Figure 4-7. The layout of the chart is still very basic, but can easily be improved. So far, we have not specified a specific chart type, axes and grids, chart style, or chart options. For simplicity, we only showed the basic technique to create charts using Lotus 1-2-3.

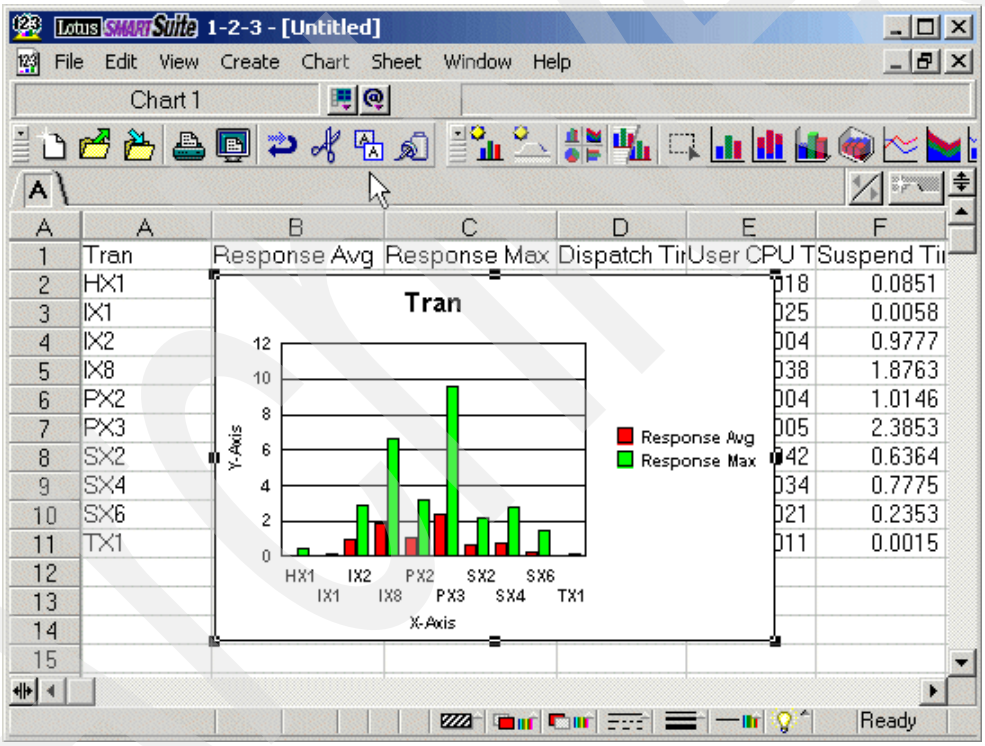

Figure 4-7 Lotus 1-2-3 chart

4.3 Processing extracts with Microsoft Excel

Microsoft Excel allows the creation of charts by using a chart wizard. You can use any existing data sheet to start the chart wizard to create charts from selected columns.

4.3.1 Exporting a performance extract

Refer to 4.2.1, “Exporting performance extracts” on page 108, for a description of how to export performance extracts from which to create a chart. After exporting the extract, we used

file transfer to store the extracted data as a text file. We created directory c:\reports\msexcel to store all files that belong to Microsoft Excel chart project.

4.3.2 Importing extracted data into Microsoft Excel

To start Microsoft Excel, we clicked **Start->Microsoft Excel**. We wanted to import the text file that contains our delimited data to Microsoft Excel. To import the file, we clicked **File->Open**. The open window displays. We navigated to the directory that contains the file that we are going to open. The file is named excel_chart.txt.

We clicked **Open**. The Text Import Wizard window (Figure 4-8) opens.

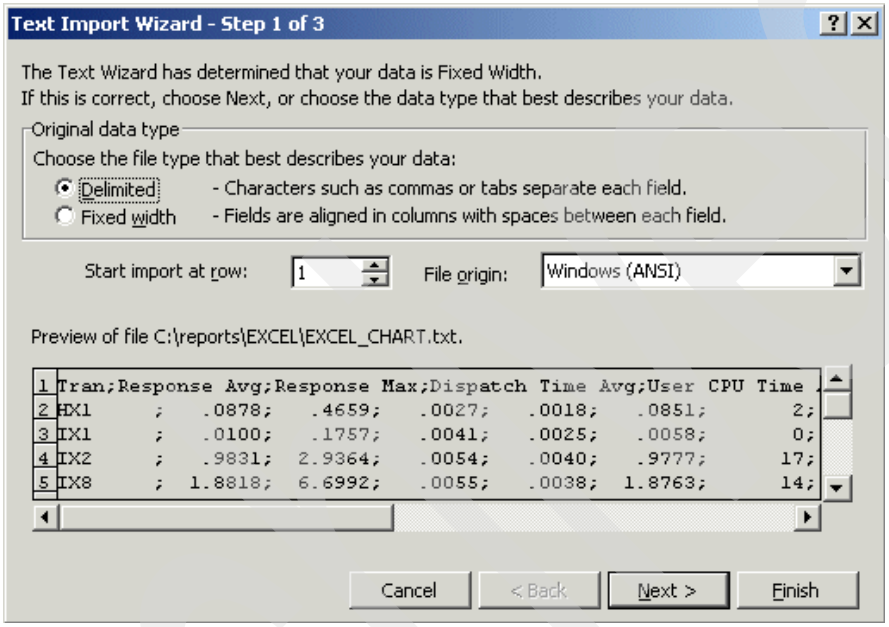

Figure 4-8 Text Import Wizard (Part 1 of 3)

Since our extracted performance data is delimited by semicolon, we chose **Delimited** by selecting the radio button as shown in Figure 4-8. We wanted to start from row 1, which is specified by default. We clicked **Next** to continue.

The next Text Import Wizard window (Figure 4-9) opens. We selected the check box **Semicolon** and deselected the rest of the check boxes. When we selected check box Semicolon, the title line was aligned automatically by Microsoft Excel.

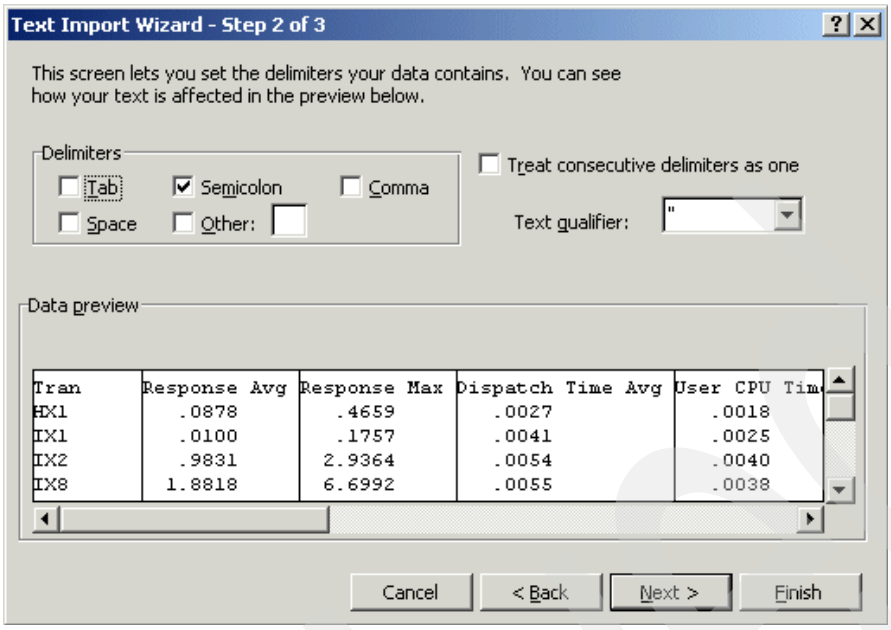

Figure 4-9 Text Import Wizard (Part 2 of 3)

We checked that the data of the imported columns appeared as expected. After that, we clicked **Next**. Then the third Text Import Wizard window (not shown) opens. It allows you to select each column and set the data format. The default is fine. Therefore, we clicked **Finish** to continue and create our chart. Microsoft Excel displays the excel_chart data sheet as shown in Figure 4-10.

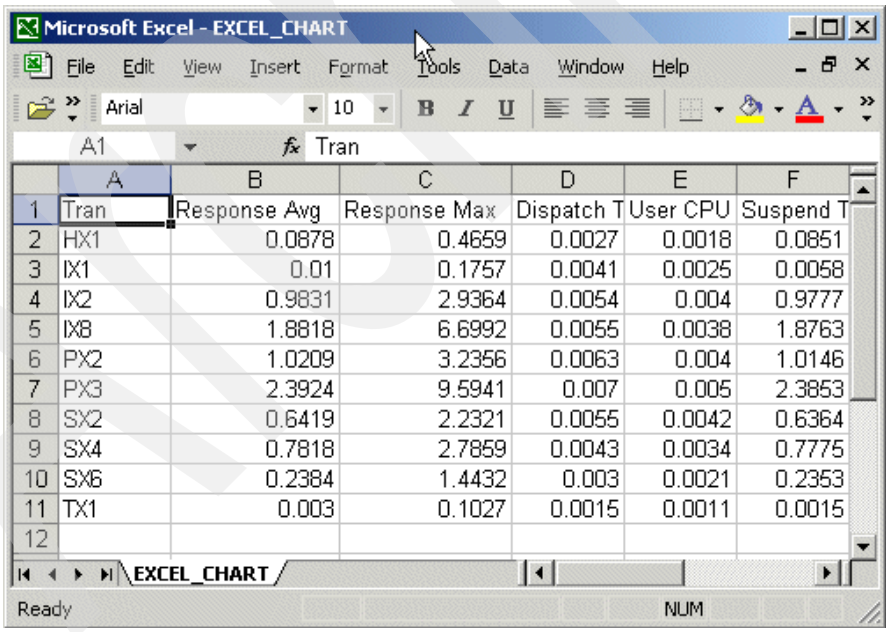

Figure 4-10 Data sheet EXCEL_CHART

As shown in Figure 4-10, column B displays the average response time per transaction while column C displays the maximum response time per transaction. To create a visual comparison of average response time to maximum response time per transaction, we selected the area that is to be used as input data for the chart.

When we selected the area, we clicked the chart wizard icon as shown in Figure 4-11.

Microsoft Excel provides a chart wizard that guides you to create charts in four steps:

1. On the first window, you select the chart type. Each chart type has a number of sub types that you can select. You can also immediately see how your chart will look by clicking a sample button.
2. Specify the columns and labels you want to appear in your chart. If you already selected your columns and labels before you start the chart wizard, the preview of your chart may be correct so that you may not need to change anything.
3. Set standard option for your chart. You can check the effect of setting the options by looking at a preview chart.
4. Decide whether to place the newly created chart in a new sheet or as an object in a data sheet.

We clicked the chart wizard icon in the tool bar.

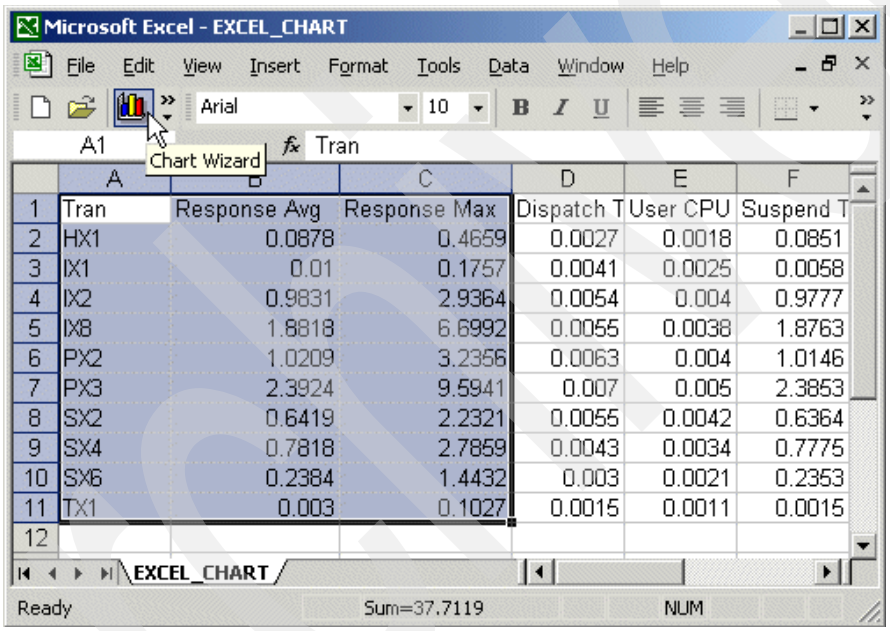

	A	B	C	D	E	F
1	Tran	Response Avg	Response Max	Dispatch T	User CPU	Suspend T
2	HX1	0.0878	0.4659	0.0027	0.0018	0.0851
3	IX1	0.01	0.1757	0.0041	0.0025	0.0058
4	IX2	0.9831	2.9364	0.0054	0.004	0.9777
5	IX8	1.8818	6.6992	0.0055	0.0038	1.8763
6	PX2	1.0209	3.2356	0.0063	0.004	1.0146
7	PX3	2.3924	9.5941	0.007	0.005	2.3853
8	SX2	0.6419	2.2321	0.0055	0.0042	0.6364
9	SX4	0.7818	2.7859	0.0043	0.0034	0.7775
10	SX6	0.2384	1.4432	0.003	0.0021	0.2353
11	TX1	0.003	0.1027	0.0015	0.0011	0.0015
12						

Figure 4-11 Starting the chart wizard

When the Chart Wizard window (Figure 4-12) opened, we selected a chart sub-type of clustered column with 3-D visual effect. You can select different chart types as well. We clicked **Press and Hold to View Sample** to check if the sub-type that we chose looks as expected. We clicked **Next** to continue.

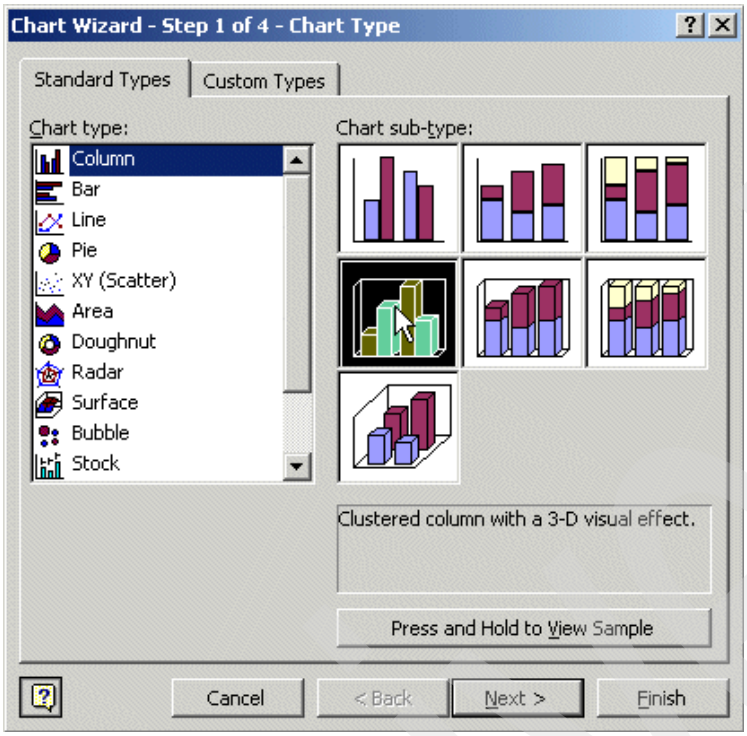

Figure 4-12 Chart Wizard (step 1 of 4)

When we started to work with the chart wizard, we already selected the data range of average response time and maximum response time. Therefore, the preview chart shown in Figure 4-13 looks correct. The preview chart shows a comparison of the selected cells. If the preview chart did not look as expected, you can click the **Data Range** tab to select cells that contain the input data required.

We clicked the **Series** tab and modified the names of our series cells. To change the Series name, we clicked in the name box and cleared its contents. After that, we typed a new name, `resp ave`, for series one. The name changes when you click the item that you are about to change in Series pane. We repeated these steps to rename series 2 to `resp max`. We clicked **Next** to continue.

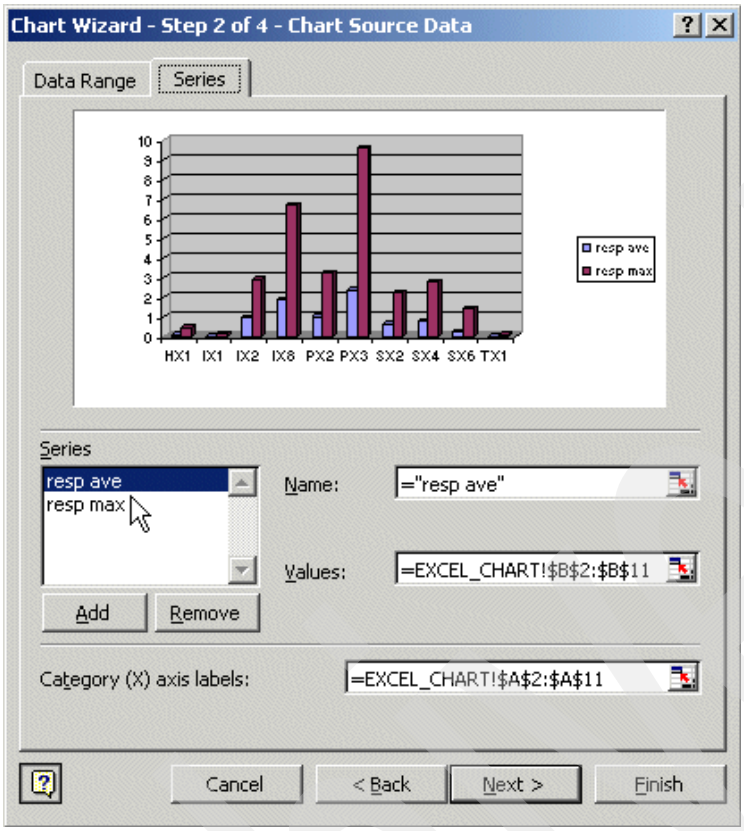

Figure 4-13 Chart Wizard (step 2 of 4)

The Chart Wizard window, step 3 of 4, opens. Step 3 of the chart wizard allows the setting of standard options for the chart that you created. For simplicity, we did not change anything during the process of step 3. The chart is therefore created as shown in the preview section of the Chart Wizard window in Figure 4-14.

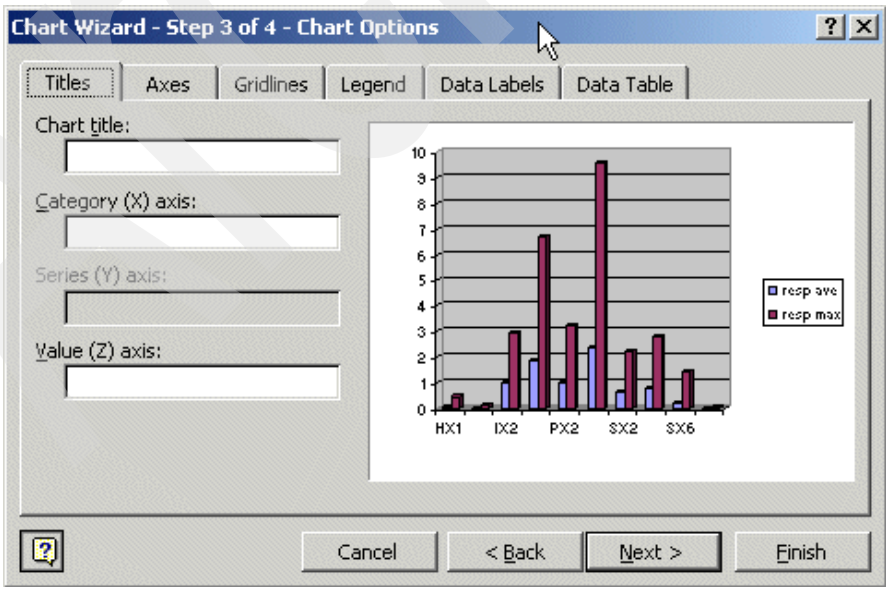

Figure 4-14 Chart wizard (step 3 of 4)

We clicked **Next** to continue. Chart Wizard window (step 4 of 4) opens. During the process of step 4, we had to decide whether we wanted to place the chart as a new sheet or as an object on an existing data sheet. We kept the default and placed the chart as an object in the excel_chart data sheet. We clicked **Finish** to finally create our chart.

Figure 4-15 shows the chart that we created. The appearance of the chart can still be improved. You can change the way the data is shown, color, chart options, and chart type.

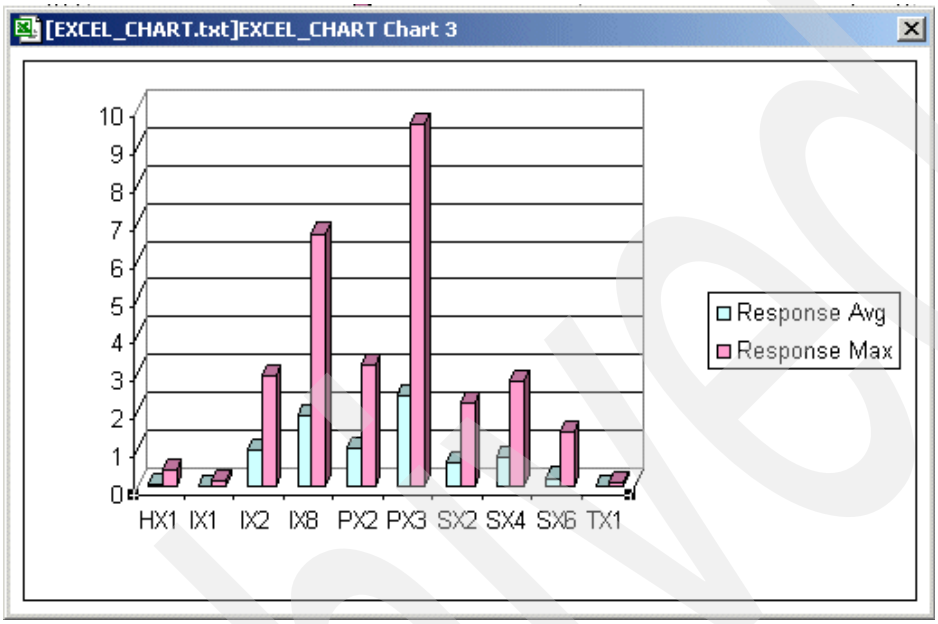

Figure 4-15 Microsoft Excel chart

4.4 Processing extracts with Microsoft Access

Microsoft Access provides a chart wizard that you can use to create charts based on the data specified in a form or report. CICS Performance Analyzer allows you to export performance extracts that can be imported to Microsoft Access. To use the chart wizard, you must have Microsoft Graph 2000 installed. The following sections describe step-by-step how to:

- Export performance extract
- Import extracted data to Microsoft Access
- Create a form based on the extracted data
- Use the chart wizard to create a chart in a form

4.4.1 Exporting performance extract

Refer to 4.2.1, “Exporting performance extracts” on page 108, for a description about how to export performance extracts. After exporting the extract, we used file transfer to store the performance extract as a text file. We created directory c:\reports\msaccess for that.

4.4.2 Importing extracted data into Microsoft Access

We clicked **Start->Programs->Microsoft Access**. When the main Create a New Database window opened, we clicked **Cancel**. To open our text file, we clicked **File->Open** and navigated to the directory that contains the c:\reports\msacces/acces_chart file. We clicked **Open**.

Figure 4-16 shows the Link Text Wizard window that opened. We made sure that radio button **Delimited** was selected since our test file is delimited by semicolons. We clicked **Next**, which opened another page of the link text wizard.

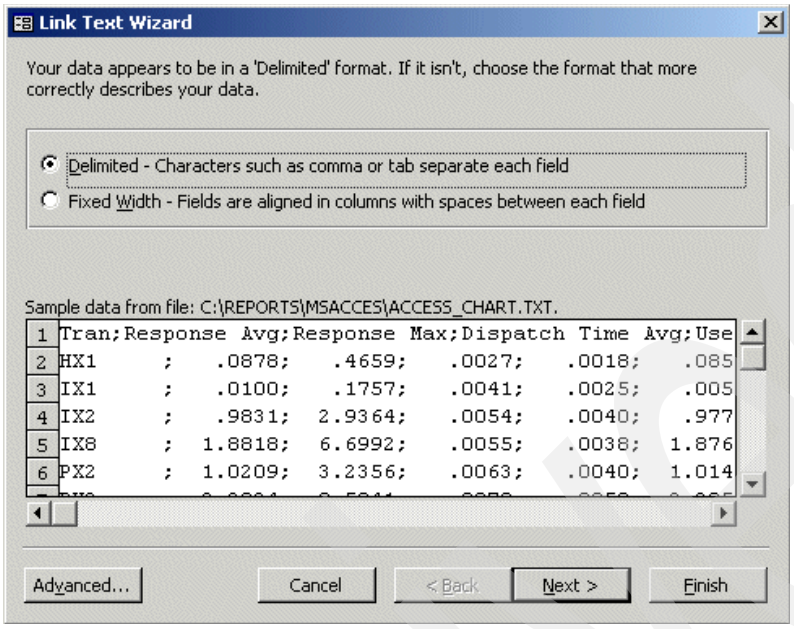

Figure 4-16 Link Text Wizard.

On the second page of the Link Text Wizard (Figure 4-17), we clicked the **Semicolon** radio button to specify which type of delimiter we used. It is important to select that the first row of our table contains field names. Otherwise Microsoft Access inserts a title line with generated field names. Therefore, we selected the **First Row Contains Field Names** option to avoid generating a second line of field names. We clicked **Next**.

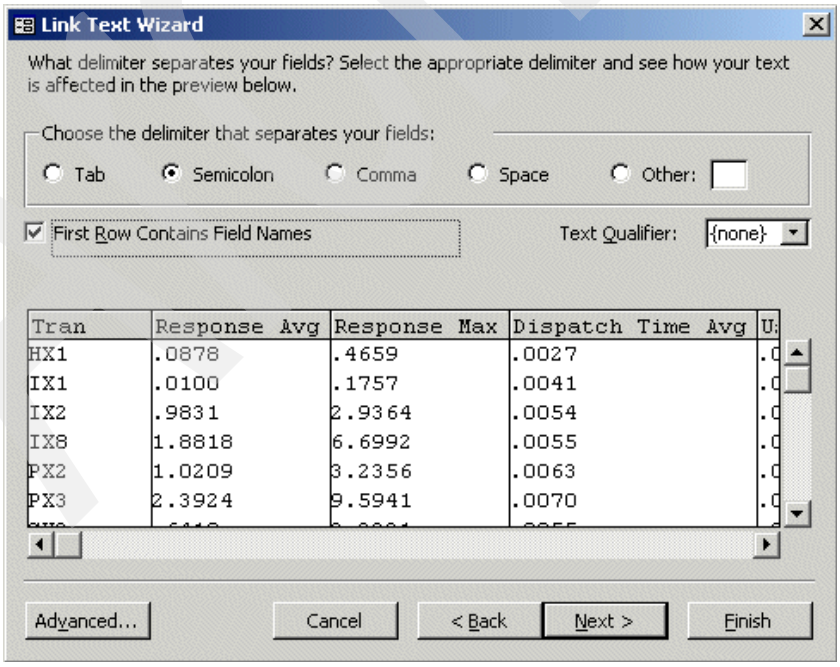

Figure 4-17 Link text wizard 2

The next Link Text Wizard window allows the specification of information about the fields you are importing. You can associate field types, eliminate columns of the table, or do both. We kept the defaults and clicked **Next**.

On the last Link Text Wizard window we specified a name for the linked table and clicked **Finish**.

The Database window opened. On the left Object pane, we clicked **Forms** and then double-clicked **Create form by using wizard**.

The Form Wizard window (Figure 4-18) opened. We moved the fields we wanted in the form to the selected fields pane on the right in the window. All the fields can be moved, or only the ones that you want to use for the chart. We clicked **Next**.

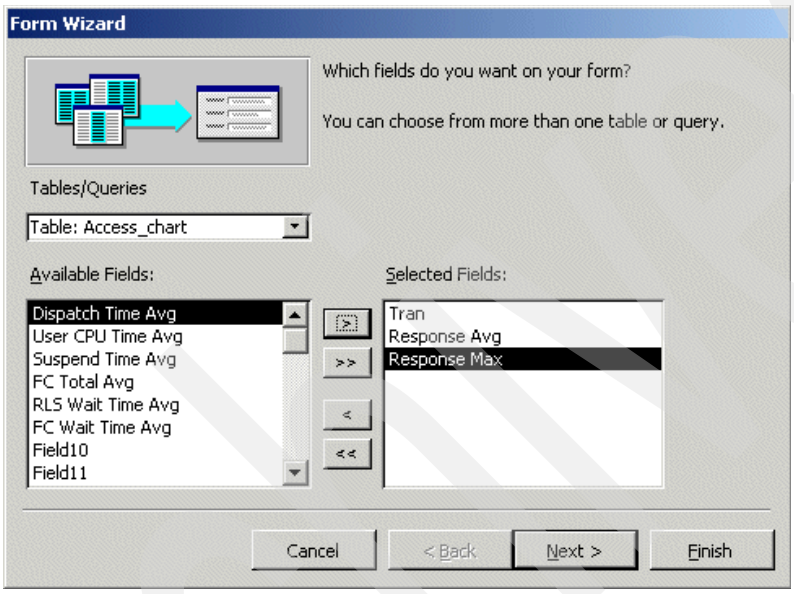

Figure 4-18 Form Wizard

The second page of the Form Wizard appears. It allows the selection of a layout for the form. We selected the **Data sheet** radio button and clicked **Next**.

The third page of the Form wizard displays. We kept the standard style and clicked **Next**.

On the next Form Wizard window, we typed the name of the form and clicked **Finish**.

The Database window opens again (Figure 4-19). We double-clicked the form name that we created. Our form name was Access_chart.

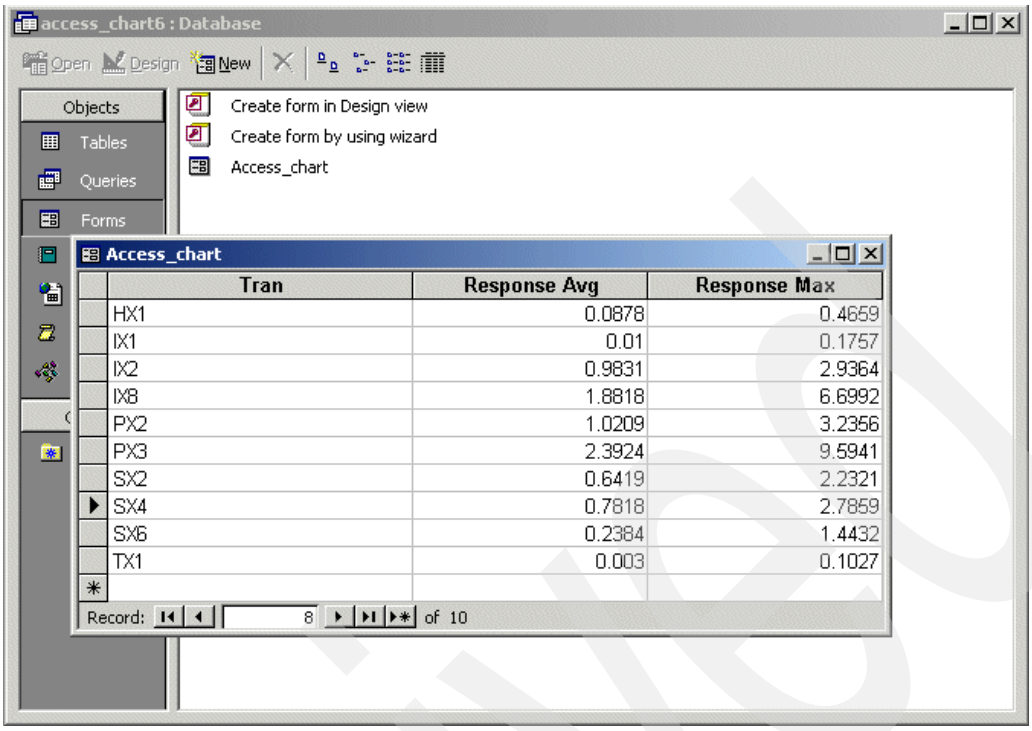

Figure 4-19 Data sheet of Access_chart form

A data sheet window of form Access_chart opens. We can only use the chart wizard if the form will be displayed in design view mode. Therefore, while the form was still open, we clicked the **Design View icon** in the tool bar. The view of the form changed to design view.

Figure 4-20 shows the Access_chart form in design view mode. We clicked **Insert->Chart** while the form was displayed in design view.

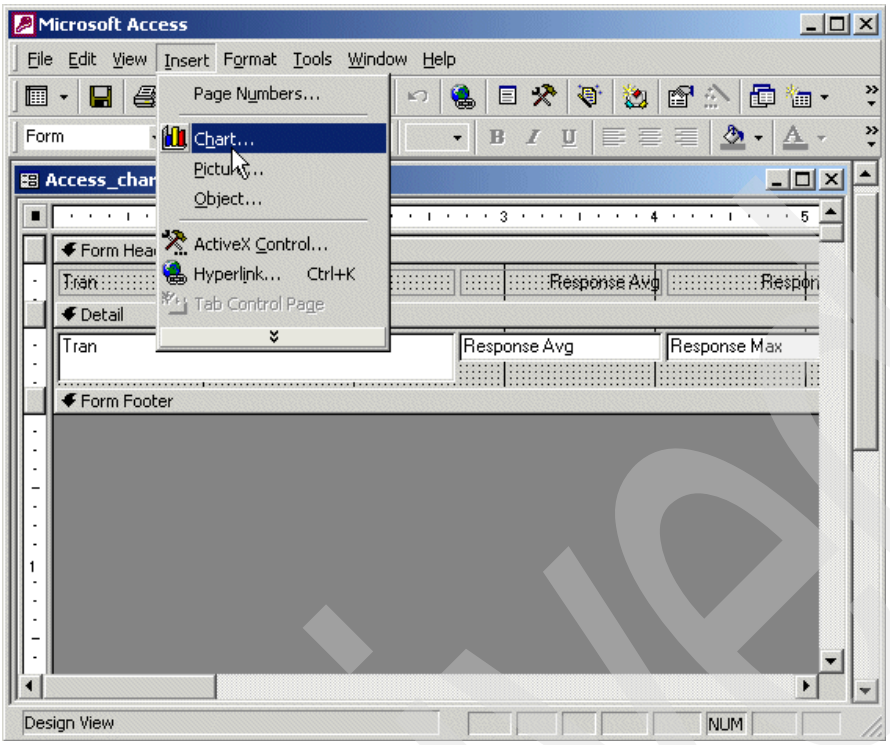

Figure 4-20 Chart wizard invoked while in design view mode

The Chart Wizard window opened. We needed to specify which table or query we want to use to create the chart. **Access_chart**, the name of our table, is already selected. The radio button **Tables** is also selected. We made no further changes and clicked **Next**.

The second Chart Wizard window opened. Here, we selected which fields of the table contained the data for the chart. We moved the fields from which we wanted to create the chart to the right pane. We selected **Tran**, **response time**, and **suspend time**, which should allow a visual comparison of response time and suspend time per transaction. We selected the fields in the left pane and moved them to the right pane by clicking the button with the right arrow. When we finished moving the required fields to right pane, we clicked **Next**.

The third Chart Wizard window (Figure 4-21) opened. We selected a 3-D column chart. This allowed the comparison of data points along two axes and the comparison between items, dispatch time, and response time. When we chose the type of chart we wanted, we clicked **Next**.

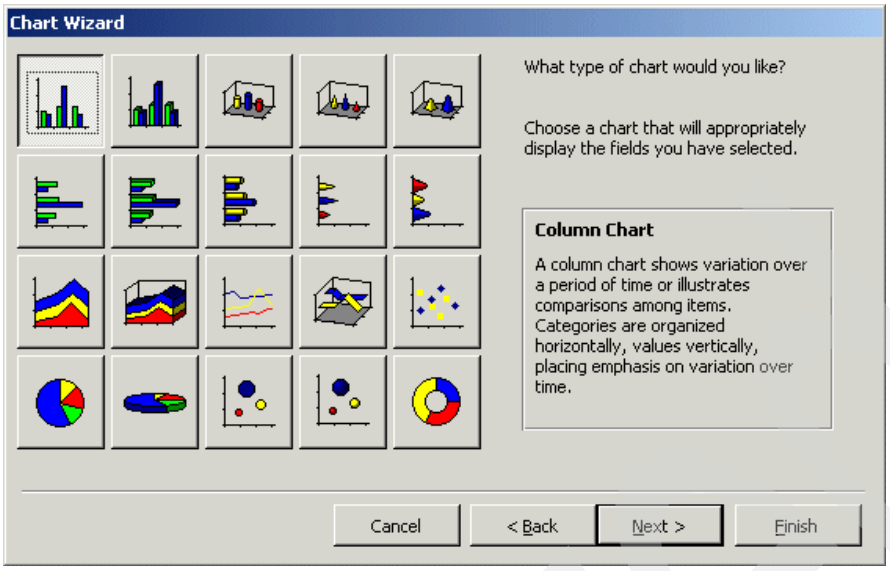

Figure 4-21 Chart Wizard: Third window

The next chart wizard window was displayed. We used drag and drop to move field buttons, response time, and dispatch time, from the right to the data pane on the left of the chart. When both field buttons were moved, we double-clicked the **Response time field** button and selected **Average** from the list of options. Then we double-clicked the **Dispatch time field** button in the data pane and selected **Average**.

Next, we used drag and drop to move the Tran field button from the right to the Axis pane on the left of the chart wizard window. No further customization needed to be done to the Tran field button. We clicked the **Preview Chart** button in the upper left corner of the Chart Wizard window to check if the basic layout of the chart is displayed correctly. Then we clicked **Next** to continue creating our chart.

The next Chart Wizard window (Figure 4-22) opens. We did not want the chart to change from record to record, so we clicked **Next**.

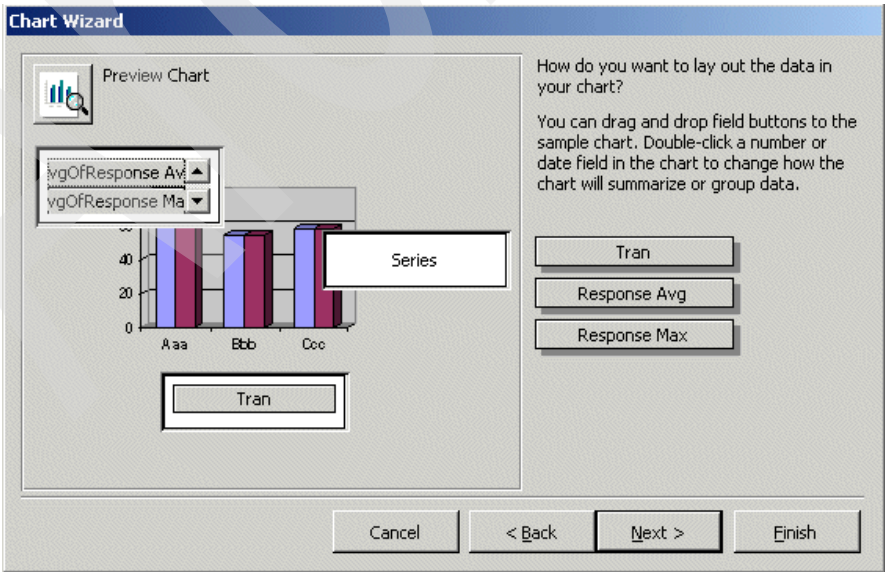

Figure 4-22 Chart Wizard: Fourth window

The next Chart Wizard window that opened allowed the changing of the name of the chart title. We kept the name that was displayed, which is Access_chart. We clicked **Finish** to complete the Chart Wizard process.

We returned to the Form Design View window, which displayed the chart. The chart indeed shows sample data rather than what we expected. We discovered that if you are in a form design view when you first create a chart, you have to switch to form view to see current data. Therefore, we clicked **View->Form View** which displays the Access_chart form view window including the chart that we created.

Figure 4-23 shows the form view of our chart. The chart is displayed based on a single record. You can move from record to record and you see a chart that represents only the data in the current record. Based on the data you specify, the chart wizard determines whether it should display data from all fields in one global chart, or whether it is more appropriate to show a record-bound chart. We actually wanted a global chart. Therefore we switched the form view back to design view by clicking **View->Design View**.

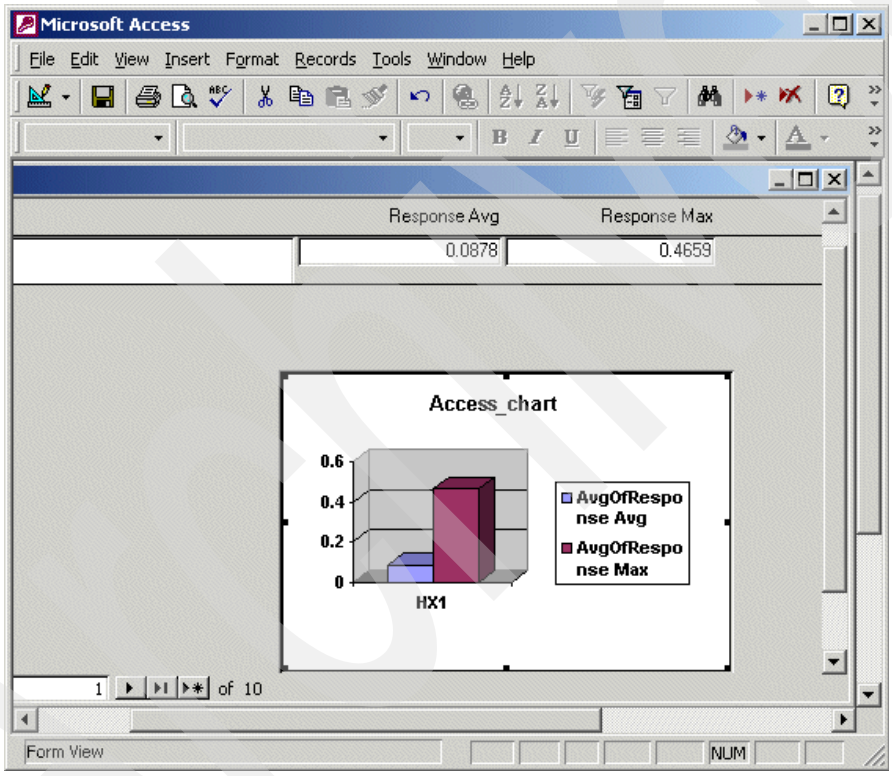

Figure 4-23 Form view of a chart

The chart was displayed in design view mode (Figure 4-24). We selected the chart and clicked the **Properties** icon in the tool bar. You can also right-click the selected chart and then choose **Properties**.

When we clicked the Properties icon, the Properties window opened. We clicked **data** (only if it is not already open) and located the property boxes, LinkChildFields and LinkMasterFields. Both fields are linked to the Tran field of our table.

To create global chart, we unlinked the Tran field from the chart. To unlink the field, we clicked the **Properties** box for LinkChildFields. When a small pop-up box opened, we clicked it as well, which cleared the Properties box.

After that we unlinked the LinkMasterfields properties box in the same way. We closed the Properties window and verified that the chart layout changed from a record-bound chart to a global chart.

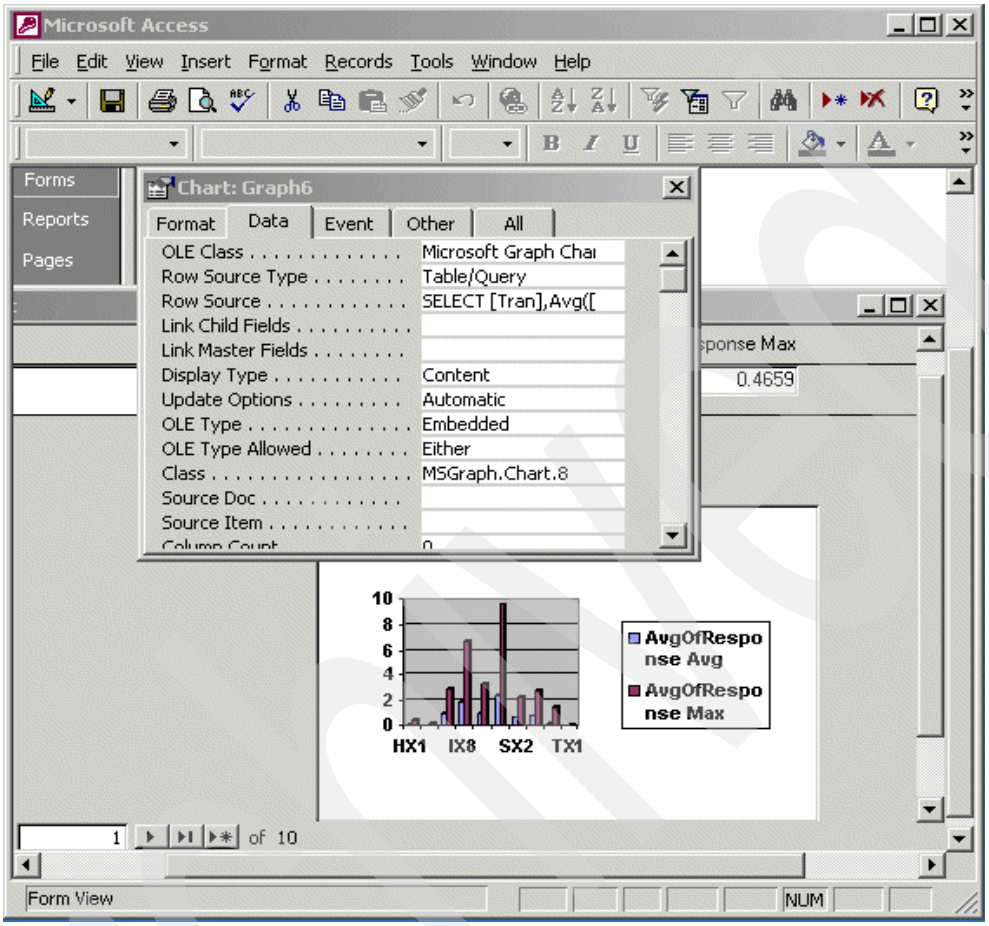

Figure 4-24 Design view of Access_chart

We changed the view back to form view by clicking **View->Form View**. You can customize the appearance of the chart by double-clicking the chart. The border of the chart changes to a bold light gray color. We then clicked **Chart** in the tool bar to see a list of options to choose from. After that, we saved the form containing the chart.

Part 2

CICS Performance Analyzer in action

This part goes through a sequence of scenarios that show how CICS Performance Analyzer (PA) reports and extracts can help you to analyze the behavior of your system or performance characteristics of specific applications. The scenarios we discuss cover traditional application workloads (Cobol, VSAM, DB2, MQ) as well as new Web-initiated or Java workloads.

This part also explains how you can use:

- CICS PA to evaluate the overall system performance
- A series of CICS PA reports to drill down on particular problems
- The Historical Database to maintain, report and export to DB2 CICS Monitoring Facility (CMF) performance data

5

System setup and scenario overview

This chapter describe the ITSO CICSplex environment that we used to run our sample scenarios and generate performance data. To generate transaction workloads, we combined several applications that were used in the course of several residency projects and described in other Redbooks. Consequently, our CICSPlex configuration in this project is a combination of configurations used in other ITSO projects.

This chapter also introduces a set of scenarios that were used to demonstrate how you can use CICS Performance Analyzer (PA) to improve application performance, to verify application design, or to improve overall performance of a complex CICS system.

5.1 CICS region setup

We decided to build a configuration that would support a mixture of traditional (COBOL, VSAM, DB2) and new (Java, Enterprise JavaBean (EJB)) workloads. To simplify the CICSPlex System Manager (SM) setup, we built our CICSPlex using only one z/OS image, SC66, of the ITSO Parallel Sysplex®.

By convention, the APPLIDs of CICS regions are composed of an SCSC string concatenated with a SYSID. For example, our CICSPlex SM address space (CMAS) region has a SYSID of CMAS and the APPLID of SCSCCMAS. All CICS regions described in this chapter are connected and defined to our CMAS and run under its control.

5.1.1 Configuration for traditional workloads

To run traditional 3270 workloads, we defined two CICS Terminal Owning Regions (TORs) with SYSIDs of PTA1 and PTA2. The workload was generated using the Teleprocessing Network Simulator (TPNS) running on another z/OS image of our Parallel Sysplex, SC47. Both TORs registered with the VTAM Generic Resource facility, so the 3270 workload was balanced between the two TORs. All transactions can also be run manually from 3270 emulation screens. The CICS level of the TOR regions was CICS Transaction Server 1.3.

Each TOR had MRO connectivity to four Application Owning Regions (AORs). AOR regions PAA1 and PAA4 were at CICS Transaction Server (TS) 2.2 level and were used to run VSAM workload. The VSAM data sets used by the workload can be opened in Record Level Sharing (RLS) mode to be accessible with update integrity from both AORs at the same time. They can also be opened in Local Shared Resource (LSR) mode. However, if one of the two AORs opened them for update, another can only open them for read and browse operations. Dynamic transaction routing under control of CICSPlex SM was used to forward the VSAM workload to AORs.

In the problem determination scenario described in Chapter 18, “Using CICS Performance Analyzer reports for problem determination” on page 385, we had TPNS create a workload as though users were signing on to PAA1 directly, and PTA1 was used as an FOR to function ship file requests, and tuned for file IO appropriately.

AOR regions PJA6 and PJA7 were at CICS TS 2.2 level, and they were used to run DB2, Java, and EJB workloads. The DB2 and Java simulated workloads were also generated by TPNS using the same 3270 network definitions as those used for the VSAM workload. We used static transaction routing definitions to forward transactions that access DB2 tables from PTA1 to PJA7 and from PTA2 to PJA6 (see Chapter 7, “Tuning the CICS DB2 attachment facility” on page 171). The Java transaction was routed in a similar way (see Chapter 12, “Java applications in CICS” on page 267).

5.1.2 Configuration for Enterprise JavaBean workloads

To run EJB workloads, we built a logical EJB server composed of two Internet Inter-ORB Protocol (IIOP) listener regions, PLA1 and PLA2, and two Java AORs, PJA6 and PJA7. The workload was generated using a set of batch script files running on a workstation. All applications can also be run manually from a browser through a menu provided by a servlet that could be invoked in a WebSphere Application Server on a Windows 2000 workstation. In both cases, the client (command line client or servlet) invokes an Enterprise JavaBean running in CICS Java AORs. The CICS level of the IIOP listener regions and Java AORs was CICS TS 2.2.

To enable CICS to publish references to the home interfaces of enterprise beans and to enable enterprise bean clients to obtain these references using the Java Naming and Directory Interface (JNDI) API, we set up a name server using a z/OS Lightweight Directory Access Protocol (LDAP) server. This LDAP server can run on any MVS image, but we used it to start on the same image where our CICS regions ran.

Each of the listener regions had MRO connectivity to each of the Java AORs. There is also MRO connectivity between PJA6 and PJA7 because one of our enterprise bean applications required access to a partner AOR.

The listener regions used TCP/IP port sharing, so the IIOP inbound requests could be balanced between the listener regions. The distributed routing mechanism, implemented by CICSPlex SM provided EYU9XLOP program, was used to balance method requests across AORs PJA6 and PJA7.

The Java AORs are connected to a DB2 subsystem D7Q2 and they also share a set of VSAM data sets opened in RLS mode used by our enterprise bean application. There are two versions of an application that use VSAM RLS files and two versions using DB2 data (JDBC and SQLJ).

For a complete description of how to set up a CICS logical EJB server, refer to *CICS Transaction Server for z/OS Java Applications in CICS*, SC34-6000, and Chapter 5 in the IBM Redbooks publication *Enterprise JavaBeans for z/OS and OS/390 CICS Transaction Server V2.2*, SG24-6284. You can also refer to Chapters 10, 11, and 12 in the SG24-6284 book for a description of the ITSO enterprise bean Trader application.

5.1.3 CICS Web Support and 3270 Bridge setup

To demonstrate use of CICS PA in conjunction with CICS Web Support and 3270 Bridge, we used a stand-alone CICS TS V1.3 region PAA6 and the CICS TS V2.2 region PJA6. Applications were run manually from a browser window. Refer to Chapter 11, “CICS Web Support and 3270 Bridge” on page 257, for more details.

5.1.4 CICS Transaction Gateway setup

We also included two CICS Transaction Gateways in our configuration: one running on z/OS and another running on a Windows 2000 workstation. With the z/OS version of the gateway, an application can only use External CICS Interface (EXCI) to access CICS programs. With the distributed (Windows, for example) version of the gateway, an application can use External Call Interface (ECI) to access CICS programs or External Presentation Interface (EPI) to access CICS 3270 transactions. One of our applications running in WebSphere Application Server used ECI calls (not EPI) to invoke a CICS program. When the z/OS gateway is used, the ECI calls are mapped to EXCI calls that provide the same functionality, so our application could access CICS through either one of the gateways.

Both varieties of the CICS Transaction Gateway allow limited workload management between CICS regions to which the gateway is connected. We decided to define one upstream connection for each of the gateways. We connected the z/OS gateway to region PJA6 and the distributed gateway to region PJA7. The distributed gateway was connected using the new ECI over TCP/IP communication mechanism introduced in CICS TS V2.2.

As was the case with the IIOP workload, the workload through gateways was generated using a set of batch script files running on a workstation. The application can also be run manually from a browser through a menu provided by a servlet that can be invoked in a WebSphere Application Server on a Windows 2000 workstation. In both cases, an Enterprise

JavaBean running in WebSphere Application Server on Windows 2000 invokes a CICS program through the gateway.

For a description of how to set up the CICS Transaction Gateway on various platforms, refer to *CICS Transaction Gateway V5: The WebSphere Connector for CICS*, SG24-6133. For a description of the ECIRequest version of the ITSO Trader application, refer to Chapter 10 of *Enterprise JavaBeans for z/OS and OS/390 CICS Transaction Server V2.2*, SG24-6284.

Figure 5-1 shows our connectivity setup. MRO connections from all the CICS regions to the CMAS, as well as IP connections between Java AORs (PJA6 and PJA7) and the LDAP server, are not shown on the chart.

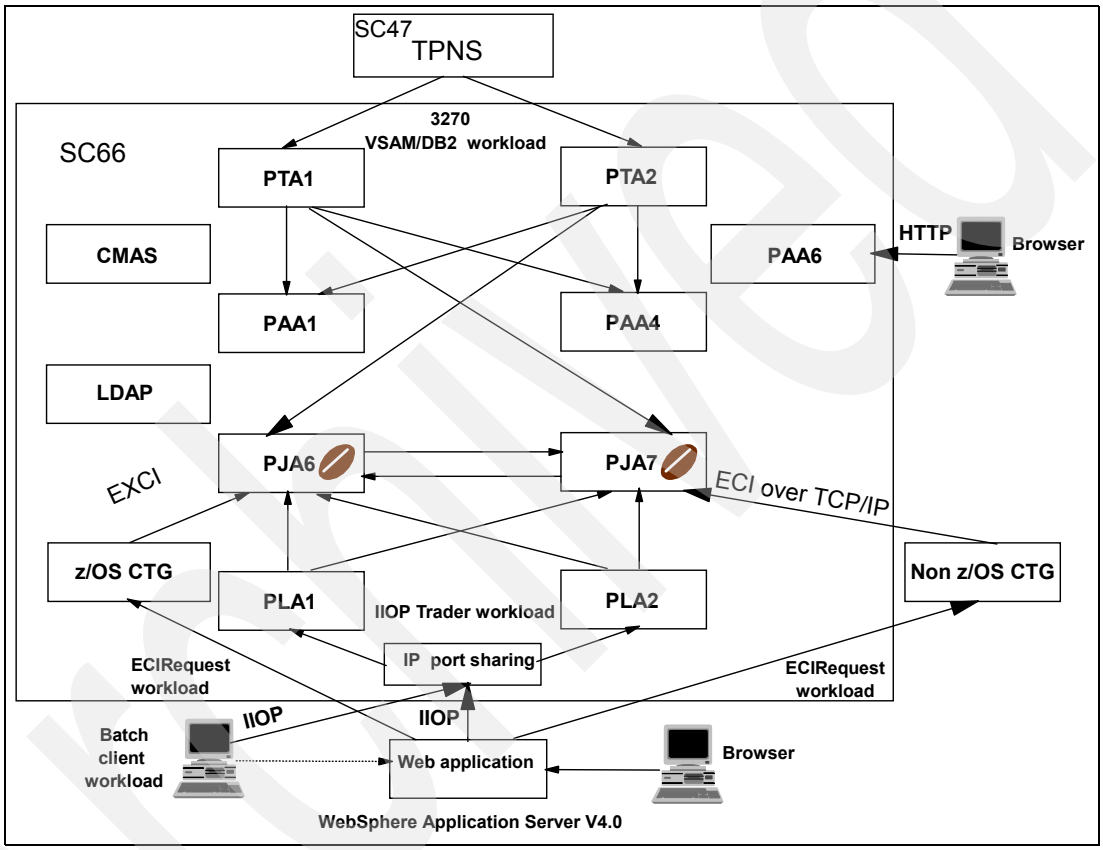

Figure 5-1 CICS region setup

Figure 5-2 shows how our AORs accessed VSAM and DB2 data.

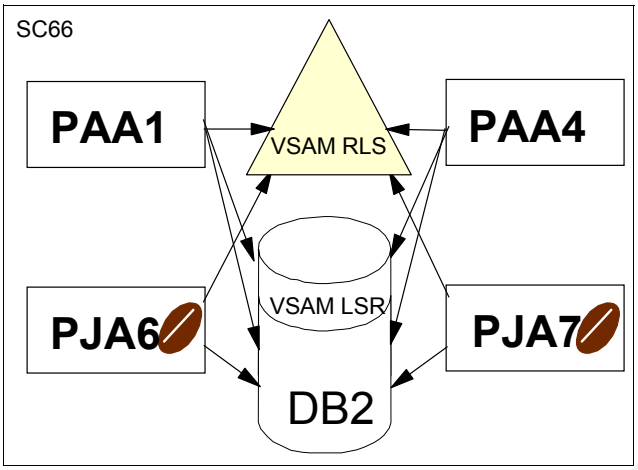

Figure 5-2 VSAM and DB2 data access

Table 5-1 summarizes the functions of different CICS regions in our setup.

Table 5-1 CICS region summary

CICS APPLID	CICS SYSID	Function and CICS TS level
SCSCCMAS	CMAS	CICSPlex SM CMAS (2.2)
SCSCPTA1	PTA1	Terminal Owning Region (1.3)
SCSCPTA2	PTA2	Terminal Owning Region (1.3)
SCSCPLA1	PLA1	IIOP Listener Region (2.2)
SCSCPLA2	PLA2	IIOP Listener Region (2.2)
SCSCPAA1	PAA1	Application Owning Region (1.3)
SCSCPAA4	PAA4	Application Owning Region (1.3)
SCSCPAA6	PAA6	Application Owning Region (1.3)
SCSCPJA6	PJA6	Application Owning Region (2.2)
SCSCPJA7	PJA7	Application Owning Region (2.2)

5.2 Scenarios

This section provide a brief description of scenarios that we used to demonstrate how you can use CICS PA to improve performance of a given application or analyze performance of a complex CICS system.

Note: The scenarios were used to provide situations that allow us to demonstrate the use of CICS Performance Analyzer reports and extracts. The CICS regions were not necessarily tuned for peak performance. And in some cases, a high level of tracing was active. Therefore, these scenarios and the results are provided for demonstration purposes only. They do not provide definitive results for a customer environment.

5.2.1 VSAM application performance analysis and Transaction Resource Monitoring support

In this scenario (refer to Chapter 6, “VSAM application performance analysis and Transaction Resource Monitoring support” on page 139), we generate the following CICS PA reports:

- Performance Summary report
- Performance List report
- Performance List Extended report
- Transaction Resource Usage report
- Transaction File Usage Summary report

We use them to compare execution characteristics of an application that is composed of a set of nine transactions that access nine VSAM data sets. You can access the VSAM data sets in either Local Shared Resources (LSR) or Record Level Sharing (RLS) mode.

This approach can be useful if you want to determine whether LSR or RLS access will provide better response time in a case of a specific application in your environment. We also show how the CICS PA reports can help you tune your LSR pool.

5.2.2 Tuning the CICS-DB2 attachment facility

In this scenario (refer to Chapter 7, “Tuning the CICS DB2 attachment facility” on page 171), we generate the following CICS PA reports:

- DB2 Short Summary report
- DB2 Long Summary report
- DB2 Recap report
- DB2 List report

We use them to adjust values of parameters that influence performance of the CICS DB2 attachment facility. We also show the difference in usage of system resources between a threadsafe and a non-threadsafe environment.

5.2.3 WebSphere MQ

In this scenario (refer to Chapter 8, “WebSphere MQ” on page 205), we focused on the following WebSphere MQ reports:

- Class 1 List and Summary reports
- Class 3 List and Summary reports

We use these report to determine which kind of the MQ API requests are issued in CICS applications. We relate the WebSphere MQ reports to a CICS performance report and show the Transaction Temporary Storage Usage Summary report.

5.2.4 CICS use of MVS System Logger

In this scenario (refer to Chapter 9, “CICS and MVS System Logger” on page 223), we generate the following CICS PA reports:

- System Logger Logstream Summary report
- System Logger List report

We use these reports to identify possible areas of improvement with regards to allocation of a direct access storage device (DASD)-only log stream for use by the CICS logger component.

5.2.5 CICS access through CICS Transaction Gateway

In this scenario (refer to Chapter 10, “Scenarios with CICS Transaction Gateway” on page 241), we generate the following CICS PA reports:

- Performance Summary report
- Performance List report

We use them to compare internal CICS response times and consumption of system resources by a CICS application that is invoked from the WebSphere Application Server environment in two cases:

- CICS Transaction Gateway for z/OS
- CICS Transaction Gateway for Windows 2000 accessing CICS through ECI over TCP/IP

We also show how CICS PA can help us to determine how a CICS client application uses the ECI interface and suggest a possible improvement.

5.2.6 CICS Web Support and 3270 Bridge

In this scenario (refer to Chapter 11, “CICS Web Support and 3270 Bridge” on page 257), we generate the following CICS PA reports:

- Transaction Group report
- Transaction Group Summary report

We use these reports to tune our CWS environment for better performance.

5.2.7 Java applications in CICS

In this scenario (refer to Chapter 12, “Java applications in CICS” on page 267), we generate the following CICS PA reports:

- Performance Summary report
- Performance List report

We use these reports to:

- Compare behavior of a CICS Java application in the environment of a resettable Java Virtual Machine (JVM) to the behavior in the environment of a non-resettable JVM.
- Show the advantage of using shared application classpaths.

5.2.8 Enterprise JavaBeans in CICS

In this scenario (refer to Chapter 13, “Enterprise JavaBeans in CICS” on page 285), we generate the following CICS PA reports:

- Performance List report
- Performance Summary report

We use these reports to determine the optimum number of JVMs to be run in our CICS regions. We also use these reports to compare consumption of system resources by the same CICS enterprise bean application in three different data access cases:

- Access to VSAM data sets through JCICS classes
- Access to DB2 data through JDBC interface
- Access to DB2 data through SQLJ interface

5.2.9 Application Naming support

In this scenario (refer to Chapter 14, “Application Naming support” on page 311), we show how to implement the new Application Naming support introduced by CICS TS V2.2 authorized program analysis report (APAR) PQ63143 and CICS TS V1.3 APAR PQ63141. We use the CICS PA Performance List report.

5.2.10 CALL and LINK performance

In this scenario (refer to Chapter 15, “CALL and LINK performance” on page 319), we compare CPU consumption of an EXEC CICS LINK command to that of a CALL command when used in a COBOL language program in LE/370 environment. We also show how to use event monitoring points to add user fields to CMF performance records and how to handle these fields with CICS PA. We use the CICS PA Performance List report.

5.2.11 Exception reporting

In this scenario (refer to Chapter 16, “Exception reporting” on page 343), we show how to generate CICS PA exception reports:

- Exception List report
- Exception Summary report

5.2.12 Analyzing overall CICS system performance

In this scenario (refer to Chapter 17, “Analyzing overall system performance” on page 355), we use various CICS PA reports to analyze overall performance of a complex CICS system that runs a mix of transactions that have different execution characteristics. We generate the following CICS PA reports:

- Performance List report
- Cross-System Work report
- Workload Activity report

5.2.13 Using CICS Performance Analyzer reports for problem determination

In this scenario (refer to Chapter 18, “Using CICS Performance Analyzer reports for problem determination” on page 385), we use various CICS PA reports to analyze the impact that an application change makes to our CICS system. We identify problems introduced by the change, and through a series of reports, can identify the program changes responsible for the problem. We generate the following CICS PA reports:

- Performance Summary report
- Wait Analysis report
- Cross-System report
- Transaction Resource Usage List report
- Performance List report

5.2.14 Historical Database (HDB)

In this scenario (refer to Chapter 19, “Historical Database” on page 415), we show how to use all options from the Historical Database. A Summary HDB is used to demonstrate:

- Template
- Define
- Load
- Report
- Maintenance
- Housekeeping

A List HDB is used to show the new export function for loading CICS performance data from SMF records into a DB2 table.

6

VSAM application performance analysis and Transaction Resource Monitoring support

This chapter demonstrates how we used the capabilities of CICS Performance Analyzer (PA) to measure the achieved performance objectives of a 3270 VSAM RLS/LSR application scenario. The various CICS Performance Analyzer tasks that are necessary to measure the performance data are described in detail.

It also discusses and uses the new Transaction Resource Monitoring feature introduced by CICS Transaction Server (TS) V2.2 authorized program analysis report (APAR) PQ63143. The equivalent CICS TS V1.3 APAR is PQ63141. For a description of Application Naming support, refer to Chapter 14, “Application Naming support” on page 311.

When the Transaction Resource Monitoring feature was introduced by APARs PQ63143 and PQ63141, the default for the DFHMCT TYPE=INITIAL FILE parameter was 0. The default value is now 8. This new default is introduced by CICS TS V2.2 APAR PQ76701. The equivalent CICS TS V1.3 APAR is PQ76695.

Transaction Resource monitoring is enhanced further with APARs PQ76703 and PQ76698 for CICS TS V2.2 and CICS TS V1.3 respectively. These APARs permit writing monitoring resource class records for resource managers such as DB2 and DBCTL used by transactions.

Refer to Table 2-1 on page 26 for a concise list of the enabling program temporary fixes (PTFs).

Note: These scenarios were used to provide situations that allow us to demonstrate the use of CICS Performance Analyzer reports when running with various VSAM workloads. The CICS regions were not necessarily tuned for peak performance. In some cases, they had a high level of tracing active. Therefore, these scenarios and the results provided for demonstration only. They do not provide definitive results for a customer environment.

6.1 CICS VSAM interface

CICS file control supports three VSAM access modes:

- **Local shared resources (LSR)**: These files share a common pool of buffers as well as a common pool of strings.
- **Nonshared resources (NSR)**: CICS files that are defined as nonshared have their own buffers and strings.
- **VSAM Record Level Sharing (RLS)**: Unlike LSR or NSR access modes, VSAM RLS allows multiple CICS TS regions to access VSAM files for update with full data integrity.

In a traditional CICSplex system setup consisting of Terminal Owning Regions (TORs), Application Owning Regions (AORs), and File Owning Regions (FORs), CICS LSR files and NSR files can be shared by using function shipping of file control requests to the FOR region. Function shipping to FOR regions can be processed with data integrity.

Using a single FOR in your CICSplex had some disadvantages. When you use an FOR, there is a single point of failure. If the FOR region is lost for whatever reason, you have no access to your VSAM data sets. FORs cannot help if you need to share data sets between CICS and batch regions.

RLS support was introduced by DFSMS 1.3, and CICS supports RLS access from CICS TS V1.1. VSAM RLS allows one to share VSAM files sysplex-wide among multiple CICS TS AOR regions with full update integrity. Nonrecoverable files can be read and updated by CICS and batch jobs concurrently.

We used the CICS Performance Analyzer to investigate the performance behavior of a set of CICS transactions that access VSAM data sets in LSR or RLS mode.

Important: A new function, Transaction Resource Monitoring, allows collection of information about individual files, and can give a breakdown of file usage by transaction ID. For more information about this new function and Application Naming support, refer to Chapter 14, “Application Naming support” on page 311, which describes these new functions in greater detail.

6.2 CICS VSAM RLS scenario description

To produce useful and realistic performance data for the VSAM performance scenario project, we used a traditional 3270 COBOL VSAM application that was used previously in other Redbooks projects. The application is using nine VSAM files which can be opened in either RLS or LSR mode. Therefore, we investigated both an RLS and an LSR VSAM performance scenario. The 3270 VSAM application can be invoked using another complete set of definitions and resources. Therefore, each function of the application exists twice. All the resource definition names of the alternative set of definitions have an X character in their names. When we use both sets of definitions to invoke the VSAM application, we use eighteen VSAM files for the entire application.

We used the Teleprocessing Network Simulator (TPNS) to simulate a realistic 3270 workload environment.

The 3270 VSAM application workload consists of four business applications:

- **HotelRes**: This is a simple 3270 hotel reservation application using two VSAM data sets. There are four transactions available which drive the application: HR1, HR2, HX1, and HX2.

- **Inventor**: This is an inventory tracking application. It is mainly using four transactions to manage the inventory. Transactions IT8/IX8 update the inventory, and transactions IT2/IX2 are used to inquire about part locations within the inventory.
- **Specification**: This is a bill of material management application. It is using four transactions (PS2/PX2 and PS3/PX3) to inquire information about part lists.
- **Stock**: This is a stock control application. Transactions SC2/SX2 are used to update any inventory, transactions SC4/SX4 allow you to insert new vendors, and transaction SC6/SX6 is used to delete parts from the stock.

Figure 6-1 illustrates the VSAM RLS/LSR file usage of the entire workload. We do not describe non-VSAM-related aspects of the workload, such as program and map design, since they are not relevant to our VSAM performance scenario.

Refer to Chapter 5, “System setup and scenario overview” on page 129, for a full description of the CICS environment setup we used to run the workload in RLS or LSR mode.

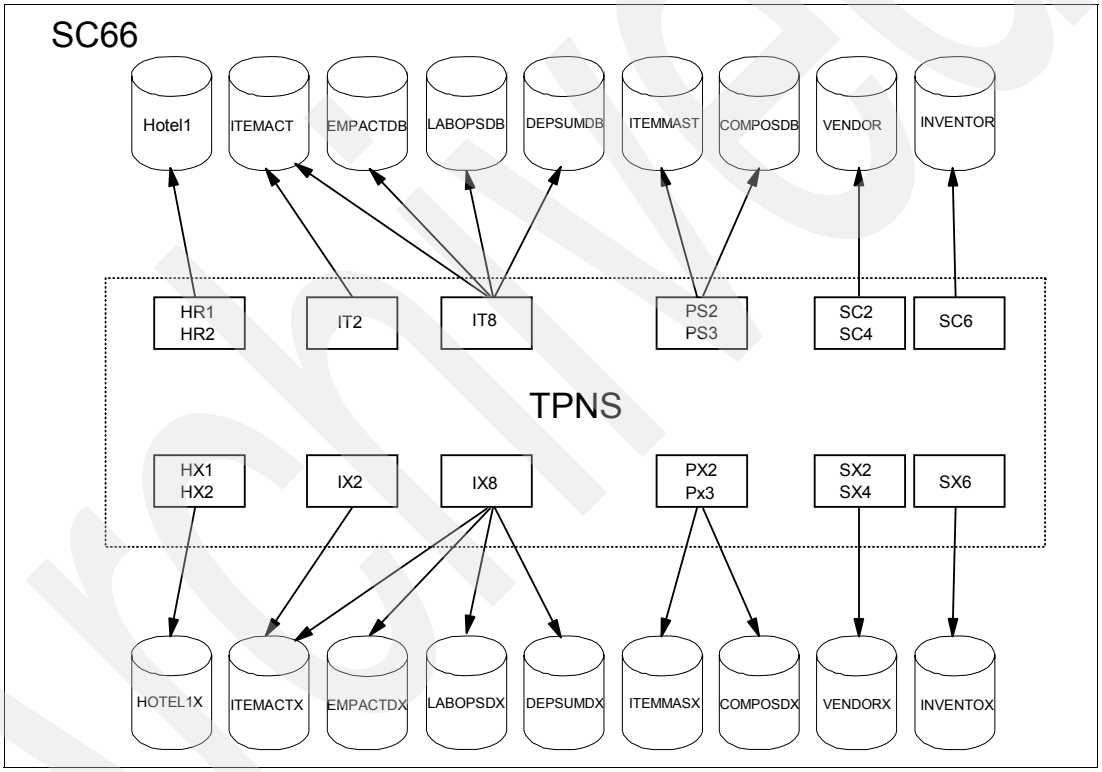

Figure 6-1 3270 VSAM application workload

6.2.1 RLS workload generation

We used Teleprocessing Network Simulator (TPNS) to generate an appropriate 3270 VSAM workload. TPNS is a terminal and network simulation tool. Apart from a number of other functions, it can be used to simulate 3270 terminal operator input. This is done by arranging a TPNS script. A TPNS script consists of a message generation deck and a network definition. There is one message generation deck available for each transaction. It controls the messages from the simulated device to the subsystem. The network definition describes the terminal characteristics for each terminal that is to be simulated.

We arranged a message generation deck for each transaction as well as a network definition for two hundred 3270 terminals. This allows us to simulate two hundred 3270 terminals that

can invoke transactions that compose our VSAM application. To run some transactions more often than others, we used the PATH statement to define a sequence of transactions for each terminal to process. For each transaction in the path, we specified a number in a DIST statement that corresponds to the entry in the path.

Example 6-1 shows how we specified the probability of distribution for our workload scenario. TPNS adds all the numbers in the DIST statement. After that, it generates a random number between 1 and the sum. TPNS then chooses the deck that has the number in its range.

Example 6-1 Probability of distribution

```
1        PATH  PS3,PS2,IT8,IT1,IT2,HR1,
               SC6,SC2,SC4,TS1,
               PX3,PX2,IX8,IX1,IX2,HX1,
               SX6,SX2,SX4,TX1
*
1        DIST  90,100,80,30,60,30,
               100,30,20,40,
               90,100,80,30,60,30,
               100,30,20,40
```

6.2.2 Performance objectives

The performance objectives and priorities depend very much on user expectations. From our previous experiences with the application, we know what average response times we can expect for different transactions. From the point of view of a terminal user, this is the most important characteristic. Another priority we have is that the application run without any resource constraints to avoid deadlocks, waits, or abends. We expect the workload we generate with TPNS to run smoothly and hope to achieve maximum throughput.

Figure 6-1 summarizes our performance objectives.

Table 6-1 VSAM scenario performance objectives

Application	Transaction	Response ave	Response max
HOTEL	HR1 HX1	< 0,05	0,1
INVENTOR	IT8, IX8	<0,15	0,2
INVENTOR	IT2, IX2	<0,015	0,02
SPECIFIC	PS2,PS3, PX2,PX3	<0,015	0,05
STOCK	SC2,SC4,SC6, SX2,SX4,SX6	<0,04	0,06

We are ready now to start the VSAM workload using TPNS. We gather the necessary performance data and analyze the results using a CICS Performance Analyzer summary report.

6.3 Running the VSAM RLS scenario

This section describe the tasks that we performed to collect the performance data for our VSAM application. First we used CICS Performance Analyzer functionality to provide an overview of the performance behavior of the application. We performed the following steps:

1. Start TPNS and run the entire application for about 15 minutes. The application runs through TORs PTA1,PTA2 and AORs PAA1,PAA4.
2. Switch storage management subsystem (SMF) data sets. Note the name of the archived SMF data set that contains our performance data.
3. Create a summary performance report using CICS Performance Analyzer:
   a. Create a Summary Report Form
   b. Create an Object List
   c. Create a Report Set
4. Submit generated JCL and check the results.

6.3.1 Updating system definitions

After we ran TPNS for about 15 minutes, we switched SMF data sets and recorded the name of the archived SMF data set that contains the necessary performance records. The name of the data set is SMFDATA.ALLRECS.G8328V00.

CICS Performance Analyzer can automatically populate your systems definitions with details extracted from SMF files. To check that we are using the correct SMF data set and that we collected performance data for all the systems, we used the Take-up function first.

To perform the data Take-Up from SMF, we followed these steps:

1. From the CICS Performance Analyzer Primary Option Menu, we selected option `1`.
2. Then the System Definitions menu opens. We selected option `4`.
3. The Data Take-Up from SMF screen is displayed. We updated this screen with the SMF data set name as shown in Figure 6-2. Then, we pressed the Enter key to generate a batch job to extract the details from the SMF data set.

```
------------------------- System Definitions -------------------------
   File  Options  Help
 ---------------------------------------------------------------------
                        Data Take-Up from SMF
 Command ===>

 Specify the SMF File for data take-up.

 Data Set Name . . . 'SMFDATA.ALLRECS.G8328V00'

 Specify details if data set is not cataloged:
  UNIT  . . . . .          +       VOLSER  . . .         +
  SEQ Number  . .      (1 to 255)

 Execution Mode:
 1  1. Submit Batch JCL
    2. Edit Batch JCL
---------------------------------------------------------------------
```

Figure 6-2 Data Take-Up from SMF screen

When the job completed, we were prompted to update your system definitions with the results of the batch job. The prompt opens when we reach the System Definitions screen the next time.

When the generated batch job has completed, we verified that we had SMF records for MVS image SC66 as well as for the CICS systems participating in the workload. We also checked that the time interval of our TPNS run was processed using this SMF data set. Figure 6-3 shows the output that was produced by the Take-up job.

```
V1R3M0    13:28:14 10/09/2003                          CICS Performance Analyzer                                  Page     1
                                                           Take-up from SMF
                                                           ________________

CPA2012I  Processing started for SMF file SMFIN001
CPA2017I  SMF records for System SC66 start at 10/07/2003 17:39:08.14
CPA2016I  MVS System Logger record found, System=SC66LOGR
CPA2014I  CMF record for CICS system found, APPLID=SCSCPAA1 Release=5.3.0
CPA2014I  CMF record for CICS system found, APPLID=SCSCPJA6 Release=6.2.0
CPA2015I  DB2 Accounting record found, DB2 SSID=D7Q2 Release=7.1
CPA2014I  CMF record for CICS system found, APPLID=SCSCPTA2 Release=5.3.0
CPA2014I  CMF record for CICS system found, APPLID=SCSCPJA7 Release=6.2.0
CPA2014I  CMF record for CICS system found, APPLID=SCSCPTA1 Release=5.3.0
CPA2014I  CMF record for CICS system found, APPLID=SCSCPAA4 Release=5.3.0
CPA2013I  Processing ended for SMF file SMFIN001 - 8 system(s) found
CPA2000I  Take-up processing has completed, RC=0
```

Figure 6-3 Take-Up from SMF output

Take-up processing updates the system definitions automatically. We invoked the Systems Definitions screen by selecting option 1 from the System Definitions Menu. Figure 6-4 shows the System Definition screen after processing Take-Up from SMF. It shows that the CICS systems we used were added automatically during take-up processing.

```
File  Edit  Filter  View  Options  Help
--------------------------------------------------------------------------------
                              System Definitions                 Row 1 from 15
Command ===>                                                  Scroll ===> CSR

Select a System to edit its definition, SMF Files and Groups.
                                                                   SMF Files
/   System   Type     Image              Description               System
    SC66     Image            System added by take-up              SC66
    SCSCPAA1 CICS     SC66     System added by take-up              SCSCPAA1
    SCSCPTA1 CICS     SC66     System added by take-up              SCSCPTA1
    SCSCPTA2 CICS     SC66     System added by take-up              SCSCPTA2
    SCSCPAA4 CICS     SC66     System added by take-up              SCSCPAA4
    SC66LOGR Logger   SC66     System added by take-up              SC66LOGR
    SCSCPJA7 CICS     SC66     System added by take-up              SCSCPJA7
    SCSCPAA6 CICS     SC66     System added by take-up
    SCSCPLA1 CICS     SC66     System added by take-up
    SCSCPJA6 CICS     SC66     System added by take-up              SCSCPJA6
    SCSCPAME CICS     SC66     System added by take-up
    SCSCPLA2 CICS     SC66     System added by take-up
    SCSCLSA5 CICS     SC66     System added by take-up
    SCSCCMAS CICS     SC66     System added by take-up
```

Figure 6-4 System definitions after Take-Up from SMF

After that, we looked at the CICS System Definition entry for one of our AORs. We entered the S line command next to our AOR SCSCPAA1 listed on the System Definition screen.

The CICS System screen opens. We did not change any information on the CICS System screen. The name of the SMF data set was added to the screen automatically. For the moment, we did not want to process any user fields in our reporting. Therefore we did not need to specify further information like the name of an MCT or MCT load library. The default MCT is sufficient for now so all the information that was set by Take-Up from SMF processing is fine.

6.3.2 Creating a Summary Report Form

To see an overview of the performance behavior of our VSAM application, we had to arrange a Summary Report Form to view a performance summary of average response time, suspend time, and VSAM wait time. The format and content of the Summary Report can be customized using the Summary Report Form screen. Refer to 2.10.1, “Creating the Report Forms data set” on page 44, for a complete description of how to use Report Forms.

Figure 6-5 shows the fields that we moved above the end of report line. These are the fields that will fit in the report title line. They are included in the same order as they appear in the list. All the fields below the end of report line are ignored.

```
File  Edit  Confirm  Upgrade  Options  Help
--------------------------------------------------------------------------------
                    EDIT SUMMARY Report Form - VSAMSUM    Row 1 of 195 More: >
Command ===>                                                Scroll ===> CSR

Description  . . . Summary Report Form              Version (VRM): 530

Selection Criteria:
    Performance

   Field
/  Name +     S Type    Fn   Description
   TRAN       A              Transaction identifier
   RESPONSE              AVE  Transaction response time
   DISPATCH     TIME     AVE  Dispatch time
   CPU          TIME     AVE  CPU time
   SUSPEND      TIME     AVE  Suspend time
   FCTOTAL               AVE  File Control requests
   RLSWAIT      TIME     AVE  RLS File I/O wait time
   FCWAIT       TIME     AVE  File I/O wait time
   FCADD                 AVE  File ADD requests
   FCBROWSE              AVE  File Browse requests
   FCDELETE              AVE  File DELETE requests
   FCGET                 AVE  File GET requests
   FCPUT                 AVE  File PUT requests
   EOR                        ---------------- End of Report ----------------
   EOX                        ---------------- End of Extract ---------------
   SC24UHWM              AVE  UDSA HWM below 16MB
   SC31UHWM              AVE  EUDSA HWM above 16MB
   ........
   ........
```

Figure 6-5 VSAM application Performance Summary fields

We created a new Report Form by selecting option 3 from the Primary Option Menu. In the command line, we typed NEW to create a new Report Form. The New Report Form screen opens, as shown in Figure 6-6. We entered a new name for the Report Form which is VSAMSUM. Then we typed the CICS APPLID. The CICS version was updated automatically.

Fields from CICS versions higher than 130 will not be available so use care as to which report is to be used when there are SMF records from mixed environments (refer to 17.2, “Working with different CICS system releases” on page 358, for further discussion).

We completed the new Report Form screen and pressed Enter. The Summary Report Form screen opens. A set of line commands can be used now to move fields that should appear in the summary report above the end of report line. Unwanted fields can be either deleted or moved below the end of report line. The end of extract line shown in Figure 6-5 is not used for Performance Summary reports.

```
---------------------------- Report Forms -----------------------------
   File  Systems  Options  Help
 -------------------------------------------------------------------
                            New Report Form
 Command ===>

 Specify the name of the new Report Form and its options.

 Name  . . . . . . VSAMSUM

 APPLID  . . . . . SCSCPAA1  +  Version (VRM) . . 530
 MVS Image . . . .
                                     Field Categories

 Form Type or Model . . 3  1. List
                           2. List Extended (Sorted)
                           3. Summary
                           4. Model (specified below)

 Model
```

Figure 6-6 New Report Form screen

6.3.3 Creating an Object List

Object Lists are introduced in 2.12, “Maintaining Object Lists” on page 56. This section describes how we created an Object List definition for the VSAM application. For the VSAM application scenario, we use 20 transaction definitions. Object Lists allow us to define a set of values that we can use to specify selection criteria for filtering SMF data for your reports. Therefore an Object List can be used to define all the transactions that belong to the VSAM application and use it as selection criteria in all reports that we will process to investigate the application performance.

To create an Object List for the VSAM application, we completed these steps:

1. From the Primary Option Menu, we selected option `4` (Object Lists).
2. The Object Lists screen opens. We entered the `NEW` command to create a new Object List. Figure 6-7 shows the new Object List screen we used to create the VSAMTRAN Object List. We pressed Enter to create the Object List and display the edit screen.

```
---------------------------- Object Lists -----------------------------
                           New Object List        Enter required field
 Command ===>

 Specify the name of the new Object List and optional model.

 Name . . . VSAMTRAN

  Model   . .
```

Figure 6-7 New Object List screen

3. We added the first transaction name in the first Value field. Line action `I` can be used to insert another line for entry of the second transaction.
4. We continued until we added all transactions that belong to the VSAM application.
5. We pressed PF3 to save the new Object List.

6.3.4 Creating a Report Set

Finally, we needed to create a Report Set to run the performance summary process. From the Primary Option Menu, we typed option `2`. The Reports Sets screen opens. In the command line, we typed `NEW` to create a new Report Set. The New Report Set screen opens. In the name field, we typed a new name for the Report Set which is VSAMSUM. Figure 6-8 shows the Edit Report Set screen.

```
 File  Systems  Confirm  Options  Help
 ------------------------------------------------------------------------------
 EDIT                      Report Set - VSAMSUM                     Row 1 of 34
 Command ===>                                                 Scroll ===> CSR

 Description . . . CICS PA Report Set

 Enter "/" to select action.

                ** Reports **                          Active
      -         Options                                  No
                     Global                              No
      -         Selection Criteria                       No
                     Performance                         No
                     Exception                           No
      -         Performance Reports                      No
                     List                                No
                     List Extended                       No
                S    Summary                             No
                     Totals                              No
                     Wait Analysis                       No
                     Cross-System Work                   No
                     Transaction Group                   No
                     BTS                                 No
                 ..........
```

Figure 6-8 Edit Report Set screen

We type line action `S` next to the Summary Report field. Figure 6-9 shows the Performance Summary Report screen.

We entered the name of the CICS system in the APPLID field. Image SC66 was updated automatically. Under the heading Report Format, we pressed F4 to see the prompt of the available report formats. We created Report Form VSAMSUM earlier, so it should be in the list and can be selected. After that, we specified line action `S` in the Performance field under Selection Criteria.

```
File  Systems  Options  Help
--------------------------------------------------------------------------------
                     VSAMSUM - Performance Summary Report
Command ===>

System Selection:                        Report Output:
 APPLID . . SCSCPAA1  +                   DDname . . . . . . . . . SUMM0001
 Image  . . SC66      +                   Print Lines per Page . .      (1-255)
 Group  . .           +

Report Format:
 Form . . . VSAMSUM   +
 Title  . .


Processing Options:                          Reporting Options:
 Time Interval  . . . 00:01:00  (hh:mm:ss)       Exclude Totals

Selection Criteria:
 S  Performance
```

Figure 6-9 Performance Summary Report screen

We pressed Enter in the Performance Summary Report screen. The Performance Select Statement screen is displayed. To use the Object List that we created earlier, we modified the bottom line of Figure 6-10. We specified the name of the Object List which was VSAMTRAN. VSAMTRAN contains objects of type TRAN. Therefore, we specified `INC` and `TRAN`, which means that we want to include performance records if or when the selection criteria is met.

```
File  Edit  Object Lists  Options  Help
--------------------------------------------------------------------------------
                   VSAMSUM - Performance Select Statement  Row 1 of 1 More: >
Command ===>                                                Scroll ===> CSR

         Active  --------------- Report Interval ----------------
   Inc   Start   -------- From ---------  --------- To ----------
   Exc   Stop    MM/DD/YYYY  HH:MM:SS.TH  MM/DD/YYYY  HH:MM:SS.TH


--------------------------------------------------------------------------------

   Inc  Field             --- Value or Range ---   Object
/  Exc  Name +    Type    Value/From   To          List +
   INC  TRAN                                       VSAMTRAN
```

Figure 6-10 Performance Select Statement screen

After that, we continuously pressed PF3 until we finally returned to the Edit Report Set screen. We are now ready to submit the job to produce the Performance Summary report.

When the job has completed, it produced the output shown in Figure 6-11.

```
 V1R3M0                                                CICS Performance Analyzer
                                                          Performance Summary
                                                 ____________________________________________
SUMM0001 Printed at 17:43:59 10/07/2003     Data from 16:47:59 10/07/2003 to 17:37:24 10/07/2003                    Page       1
```

Tran	Avg Response Time	Avg Dispatch Time	Avg User CPU Time	Avg Suspend Time	FC Total	Avg RLS Wait Time	Avg FC Wait Time	FCADD	FCBROWSE	FCDELETE	FCGET	FCPUT
HR1	.0073	.0034	.0017	.0039	2	.0033	.0000	0	0	0	1	1
HX1	.0088	.0033	.0017	.0054	2	.0041	.0000	0	0	0	1	1
IT1	.0102	.0045	.0025	.0057	0	.0000	.0000	0	0	0	0	0
IT2	.0088	.0066	.0030	.0023	17	.0016	.0000	0	0	0	17	0
IT8	.0170	.0071	.0030	.0099	14	.0092	.0000	3	0	0	9	2
IX1	.0104	.0046	.0025	.0058	0	.0000	.0000	0	0	0	0	0
IX2	.0110	.0061	.0030	.0048	17	.0042	.0000	0	0	0	17	0
IX8	.2001	.0078	.0033	.1922	14	.1139	.0000	3	0	0	9	2
PS2	.0075	.0066	.0032	.0008	18	.0002	.0000	0	0	0	18	0
PS3	.0106	.0095	.0045	.0011	34	.0001	.0000	0	0	0	34	0
PX2	.0073	.0063	.0032	.0010	18	.0003	.0000	0	0	0	18	0
PX3	.0102	.0095	.0045	.0007	34	.0002	.0000	0	0	0	34	0
SC2	.0324	.0071	.0034	.0253	18	.0246	.0000	0	0	0	9	9
SC4	.0099	.0072	.0027	.0027	9	.0020	.0000	9	0	0	0	0
SC6	.0161	.0053	.0019	.0108	4	.0100	.0000	1	0	1	2	0
SX2	.0354	.0078	.0034	.0276	18	.0273	.0000	0	0	0	9	9
SX4	.0078	.0052	.0027	.0025	9	.0011	.0000	9	0	0	0	0
SX6	.0156	.0044	.0019	.0112	4	.0104	.0000	1	0	1	2	0
TS1	.0025	.0020	.0012	.0005	0	.0000	.0000	0	0	0	0	0
TX1	.0025	.0017	.0012	.0007	0	.0000	.0000	0	0	0	0	0

Figure 6-11 Performance Summary RLS

When we looked at the output that was produced by the CICS Performance Analyzer Performance Summary report, we found that it pretty much complied with the expectations documented in 6.2.2, “Performance objectives” on page 142. There was one exception. The average response time of transaction IX8 was longer than expected. The average RLS wait time of 0,1139 seconds is more or less as expected but the average suspend time seems to be above our expectations. The average RLS wait time is a component of the average suspend time. We compared average RLS wait time with average suspend time of the other transactions that are part of the VSAM application. The average suspend time of transaction IX8 is worth a closer look.

Before we produced further reports to find the reasons for the increased suspend time, we wanted to produce a chart of the performance behavior first. If you have to present the results of your application performance tests, charts are visually appealing and make it easier for people to compare the performance behavior. It may be easier to look at charts to see whether performance improved rather than investigate many rows and columns of a large performance report.

We created a chart that displays average response time, average dispatch time, and average suspend time per transaction. We performed the following steps to create the chart that is shown in Figure 6-14.

1. Create a Report Set to export a performance extract.
2. Download the extract data set to a workstation as a text file.

The text file was imported to Microsoft Excel.

We created a chart based on the imported extract. From the CICS Performance Analyzer Primary Options Menu, we typed option `2` (Report Sets). In the command line, we typed `NEW` to create a new Report Set. We give our new report set a name, then press the Enter key. The Edit Report Set screen appears. Under heading Extracts, we typed line action `S` next to the Export option. The Export screen is shown in Figure 6-12.

```
File  Systems  Options  Help
--------------------------------------------------------------------------------
                                EXT - Export
Command ===>

System Selection:                        Extract Recap:
 APPLID . . SCSCPAA1  +                   DDname  . . . EXPT0001
 Image  . . SC66      +
 Group  . .           +

Output Data Set:
 Data Set Name  . . EXTVSM1
 Disposition  . . . 2  1. OLD   2. MOD   (If cataloged)

Extract Format:                          Enter "/" to select option
 Form  . . . . VSAMSUM   +               /  Include Field Labels
 Delimiter . . ;                            Numeric Fields in Float format

Selection Criteria:                      Summary Processing Options:
 S  Performance                           Time Interval 00:01:00  (hh:mm:ss)
```

Figure 6-12 Export performance extract

We specified the CICS APPLID `SCSCPAA1` because we used the region in our previous performance summary report. An output data set must be specified. We used EXTVSM1 and specified disposition 2. Under heading Extract Format, we pressed PF4 to see a list of available Report Forms. We used Report Form VSAMSUM that we created earlier. We kept the semicolon as a delimiter since it works well with Microsoft Excel. After that, we typed line action `S` next to the Performance option under Selection Criteria. We specified the same selection criteria that we used in Figure 6-10 to select all transactions that belong to the VSAM application. We then pressed PF3 until we returned to the Edit Report Set screen. After that, we typed `RUN` in the command line to generate the performance extract JCL. When the job completed, we had the extracted performance data available in the EXTVSM1 data set.

The data set can be downloaded to the workstation using the File Transfer utility of Personal Communications emulator or using FTP. We used the File Transfer utility to download the extracted data as a text file to the workstation.

Figure 6-13 shows the extracted performance data of our VSAM application which can be imported into any spreadsheet application in order to produce meaningful charts. Note that the header line is not aligned with the rest of the data. We found that the spreadsheet applications we used were able to align them automatically.

```
Tran;Response Avg;Dispatch Time Avg;User CPU Time Avg;Suspend Time Avg;FC Total Avg;RLS Wait Time Avg;FC Wait Time Avg;FCADD
Avg;FCBROWSE Avg;FCDELETE Avg;FCGET Avg;FCPUT Avg
HR1     ;   .0073;   .0034;   .0017;   .0039;       2;   .0033;   .0000;       0;       0;       0;       1;       1
HX1     ;   .0088;   .0033;   .0017;   .0054;       2;   .0041;   .0000;       0;       0;       0;       1;       1
IT1     ;   .0102;   .0045;   .0025;   .0057;       0;   .0000;   .0000;       0;       0;       0;       0;       0
IT2     ;   .0088;   .0066;   .0030;   .0023;      17;   .0016;   .0000;       0;       0;       0;      17;       0
IT8     ;   .0170;   .0071;   .0030;   .0099;      14;   .0092;   .0000;       3;       0;       0;       9;       2
IX1     ;   .0104;   .0046;   .0025;   .0058;       0;   .0000;   .0000;       0;       0;       0;       0;       0
IX2     ;   .0110;   .0061;   .0030;   .0048;      17;   .0042;   .0000;       0;       0;       0;      17;       0
IX8     ;   .2001;   .0078;   .0033;   .1922;      14;   .1139;   .0000;       3;       0;       0;       9;       2
PS2     ;   .0075;   .0066;   .0032;   .0008;      18;   .0002;   .0000;       0;       0;       0;      18;       0
PS3     ;   .0106;   .0095;   .0045;   .0011;      34;   .0001;   .0000;       0;       0;       0;      34;       0
PX2     ;   .0073;   .0063;   .0032;   .0010;      18;   .0003;   .0000;       0;       0;       0;      18;       0
PX3     ;   .0102;   .0095;   .0045;   .0007;      34;   .0002;   .0000;       0;       0;       0;      34;       0
SC2     ;   .0324;   .0071;   .0034;   .0253;      18;   .0246;   .0000;       0;       0;       0;       9;       9
SC4     ;   .0099;   .0072;   .0027;   .0027;       9;   .0020;   .0000;       9;       0;       0;       0;       0
SC6     ;   .0161;   .0053;   .0019;   .0108;       4;   .0100;   .0000;       1;       0;       1;       2;       0
SX2     ;   .0354;   .0078;   .0034;   .0276;      18;   .0273;   .0000;       0;       0;       0;       9;       9
SX4     ;   .0078;   .0052;   .0027;   .0025;       9;   .0011;   .0000;       9;       0;       0;       0;       0
SX6     ;   .0156;   .0044;   .0019;   .0112;       4;   .0104;   .0000;       1;       0;       1;       2;       0
TS1     ;   .0025;   .0020;   .0012;   .0005;       0;   .0000;   .0000;       0;       0;       0;       0;       0
TX1     ;   .0025;   .0017;   .0012;   .0007;       0;   .0000;   .0000;       0;       0;       0;       0;       0
```

Figure 6-13 Performance extract of our VSAM application

We used Microsoft Excel to create the chart shown in Figure 6-14 from the spreadsheet. It illustrates average dispatch time versus average suspend time per transaction. Average suspend time plus average dispatch time is the average response time as shown in the chart. The spreadsheet illustrates visually that there appears to be a problem with transaction IX8.

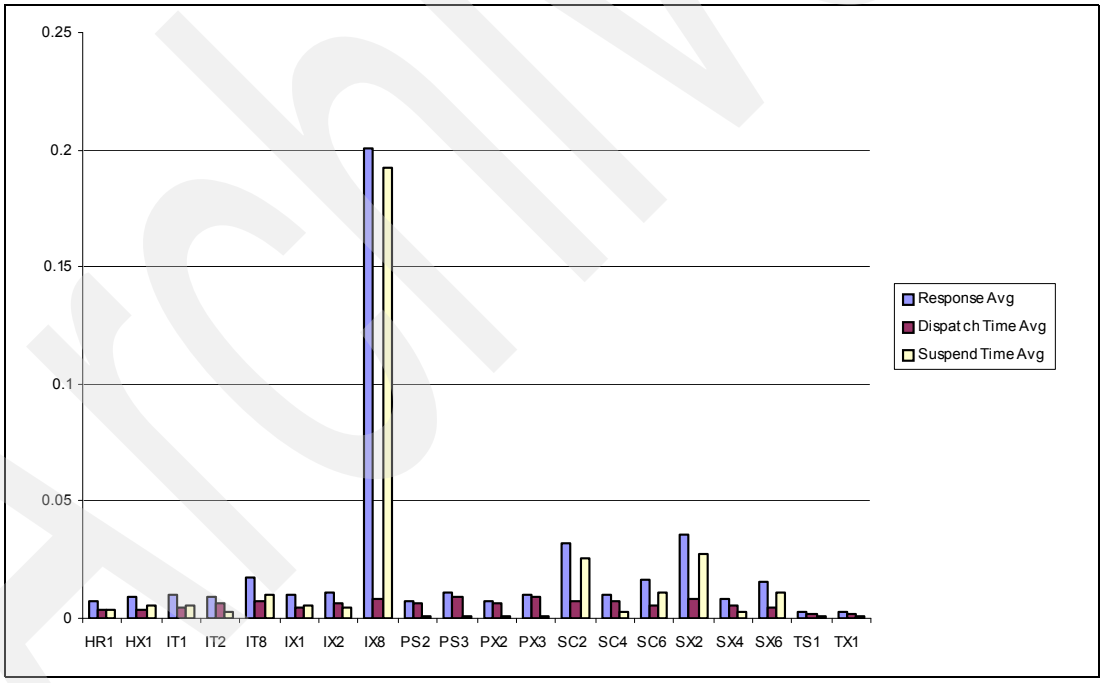

Figure 6-14 VSAM RLS application performance chart

Next, we wanted to look more closely at the performance behavior of transaction IX8. To do that, we wanted to create a CICS Performance Analyzer Performance List report. The necessary steps to get such a report are very similar to ones we performed to create a Performance Summary report.

We wanted to keep the sequence of the performance fields that we specified in our summary Report Form VSAMSUM as shown in Figure 6-5 on page 145. We cannot use a summary form to format Performance List reports. Therefore we selected option 3 (Report Forms) from

the Primary Option Menu. The Report Forms screen opens. We typed NEW in the command line to create a new Report Form. We entered a new name VSAML and selected option 1 to create a list type Report Form. After pressing the Enter key, the Edit List Report Form screen is displayed. A new sequence of performance fields can be arranged using the line commands to move the required fields above the end of report line. Refer to 6.3.2, “Creating a Summary Report Form” on page 145, to see the sequence of the VSAM related performance fields we used.

The performance list report for transaction IX8 can now be submitted. From the Primary Option Menu, we selected option 2 (Report Sets). The Report Sets screen shows a list of available Report Sets. We created Report Set VSAMSUM earlier, so it should be available in the list. We typed line action S next to the name of the VSAMSUM Report Set. The Edit Report Set screen appears.

We used Report Set VSAMSUM previously to create a Performance Summary report. Therefore, the summary item may still indicate *yes* as being active. We chose to deactivate the Performance Summary report before continuing. We did this by typing line action D next to the summary item.

To create a Performance List report, under the heading Performance Reports, we typed line action S next the List item. Figure 6-15 shows the Performance List Report screen.

```
File  Systems  Options  Help
--------------------------------------------------------------------------------
                      VSAMSUM - Performance List Report
Command ===>

System Selection:                          Report Output:
 APPLID . . SCSCPAA1  +                     DDname . . . . . . . . . LIST0001
 Image  . .           +                     Print Lines per Page . .      (1-255)
 Group  . .           +

Report Format:
 Form . . . VSAML     +
 Title  . .


Selection Criteria:
 S  Performance
```

Figure 6-15 Performance List Report screen

When we pressed Enter, the Performance Select Statement screen is displayed. It allows the specification of selection criteria for the performance list report. We selected transaction **IX8** and a response time range of 2 - 10 seconds. This should result in a performance report that shows just transactions IX8 that have a response time longer than 2 and shorter than 10 seconds (Figure 6-16).

```
File  Edit  Object Lists  Options  Help
--------------------------------------------------------------------------------
                    VSAMSUM - Performance Select Statement Row 1 of 10 More: >
Command ===>                                                   Scroll ===> CSR

         Active  --------------- Report Interval ----------------
   Inc   Start   -------- From ---------  --------- To ----------
   Exc   Stop    MM/DD/YYYY  HH:MM:SS.TH  MM/DD/YYYY  HH:MM:SS.TH


--------------------------------------------------------------------------------

   Inc  Field             --- Value or Range ---   Object
/  Exc  Name +    Type    Value/From   To          List +
   INC  TRAN              IX8
   INC  RESPONSE          2000         10000                  Milliseconds
```

Figure 6-16 Selection criteria for IX8 and the response time

We returned to the Edit Report Set screen. We used the RUN line action command next to the List report to submit the job. Using the selection criteria shown in Figure 6-16, we produced the Performance List report shown in Figure 6-17. The Performance List report shows two IX8 tasks with bad response and suspend times. These tasks are likely responsible for the increased average response time that we discovered in our Performance Summary report.

```
V1R3M0                                          CICS Performance Analyzer
                                                    Performance List
                                   ____________________________________________
LIST0001 Printed at 14:51:54 10/10/2003    Data from 17:04:02 10/07/2003      APPLID SCSCPAA1      Page       1


Tran Response Dispatch User CPU  Suspend FC Total RLS Wait  FC Wait    FCADD    FCGET FCBROWSE FCDELETE    FCPUT
      Time     Time     Time     Time              Time     Time
IX8   8.0064    .0835    .0651   7.9229        0    .0000    .0000        0        0        0        0        0
IX8   5.8168    .0769    .0654   5.7399        0    .0000    .0000        0        0        0        0        0
```

Figure 6-17 Performance list report using selection criteria

So far, we knew that there was no general performance degradation. Just two transactions were suspended for a number of seconds. We wanted more detailed information about the reason for the suspension. We created a Performance List Extended report to collect further information about the situation.

The Performance List Extended report provides a detailed list of the CMF performance class records. It differs from the Performance List report in that you can specify the sorting criteria for the performance class records.

Before a Report Set can be submitted to request a Performance List Extended report, we had to create a new Report Form of the extended list type. From the Primary Option Menu, we selected option `3` (Report Forms). The Report Forms screen is displayed. We typed `NEW` in the command line to create a new Report Form for Extended List reports. The List Extended

Report Form screen is displayed. We arranged the sequence of the performance fields that we wanted to fit in the title line of the report as illustrated in Figure 6-18.

```
 File  Edit  Confirm  Upgrade  Options  Help
 ------------------------------------------------------------------------------
                      EDIT LISTX Report Form - VSAMEL      Row 1 of 220 More: >
 Command ===>                                                Scroll ===> CSR

 Description  . . . List Extended Report Form         Version (VRM): 530

 Selection Criteria:
     Performance

    Field
/   Name +    S Type    Limit     Description
    TRAN      A                   Transaction identifier
    TASKNO    *                   Transaction identification number
    RESPONSE  *                   Transaction response time
    DISPATCH  * TIME              Dispatch time
    ABCODEO   *                   Original ABEND Code
    CPU       * TIME              CPU time
    SUSPEND   * TIME              Suspend time
    ABCODEC   *                   Current ABEND code
    COMMWAIT  *                   Communications wait time
    IOWAIT    *                   Total IO wait time
    MXTDELAY  * TIME              First dispatch MXT wait time
    ICDELAY   * TIME              Interval Control (IC) wait time
    DSPDELAY  * TIME              First dispatch wait time
    MSCPU     * TIME              CICS TCBs CPU time
    TCWAIT    * TIME              Terminal wait for input time
    EOR                           ---------------- End of Report --------------
    EOX                           ---------------- End of Extract -------------
```

Figure 6-18 Sequence of performance fields for extended list reports

After that we went back to the Primary Option Menu. From the Primary Option Menu, we selected option 2 (Report Sets). The Report Sets screen shows a list of the available Report Sets. We used line action S next to Report Set VSAMSUM to display the Edit Report Set screen. We deactivated any active reports by typing line action D next to them.

Figure 6-19 shows the Performance List Extended report screen we used to create an extended list report of our VSAM application. We updated the screen with information about the APPLID and the form name that we are going to use. Then we pressed Enter and the Performance Select Statement screen is displayed. We defined selection criteria for transaction ID IX8 and performance field TRAN.

For detailed information about how to specify a selection criteria on the Performance Select Statement screen, see 6.3.4, “Creating a Report Set” on page 147.

```
File  Systems  Options  Help
--------------------------------------------------------------------------------
                    VSAMSUM - Performance List Extended Report
Command ===>

System Selection:                          Report Output:
 APPLID . . SCSCPAA1  +                     DDname . . . . . . . . . LSTX0001
 Image  . .           +                     Print Lines per Page . .      (1-255)
 Group  . .           +

Report Format:
 Form . . . VSAMEL    +
 Title  . .


Selection Criteria:
 S  Performance
```

Figure 6-19 Performance List Extended Report screen

We pressed the PF3 key repeatedly to return to the Edit Report Set screen. We then entered the `RUN` line action command next to the List Extended report to submit the job.

Figure 6-20 shows the output of the Performance List extended process. Tasks #67075 and #67098 used additional resources because of the overhead of the abend processing for abend AEI9. It turned out that, while TPNS was running, two IX8 transactions were started manually. Since a MAPFAIL condition was not handled by the application, the tasks abended eventually.

```
V1R3M0                                          CICS Performance Analyzer
                                                 Performance List Extended
                                                 ____________________________________________
LSTX0001 Printed at  9:55:35 10/09/2003 Data from 17:03:54 10/07/2003 to 17:37:24 10/07/2003


 Tran   TaskNo Response Dispatch ABor User CPU  Suspend ABcu CommWait I/O Wait MXTDelay IC Delay Disp1Dly   MS CPU  TC Wait
                 Time     Time          Time     Time          Time     Time     Time     Time     Time     Time     Time
 IX8     67075   8.0064    .0835 AEI9    .0651   7.9229 AEI9    .0021    .0000    .0000    .0000    .0000    .0000    .0000
 IX8     67098   5.8168    .0769 AEI9    .0654   5.7399 AEI9    .0048    .0000    .0000    .0000    .0000    .0000    .0000
 IX8     67110    .1750    .0053         .0034    .1697         .0000    .0000    .0000    .0000    .0002    .0000    .0000
 IX8     67266    .1695    .0056         .0034    .1639         .0000    .0000    .0000    .0000    .0000    .0000    .0000
 IX8     67281    .0854    .0084         .0034    .0770         .0000    .0000    .0000    .0000    .0000    .0000    .0000
 IX8     67329    .1487    .0072         .0034    .1416         .0000    .0000    .0000    .0000    .0004    .0000    .0000
 IX8     67350    .1465    .0101         .0034    .1364         .0000    .0000    .0000    .0000    .0000    .0000    .0000
 IX8     67366    .0816    .0066         .0034    .0750         .0000    .0000    .0000    .0000    .0000    .0000    .0000
 IX8     67434    .0956    .0065         .0036    .0891         .0000    .0000    .0000    .0000    .0000    .0000    .0000
 IX8     67491    .0905    .0058         .0031    .0847         .0000    .0000    .0000    .0000    .0000    .0000    .0000
 IX8     67529    .0936    .0063         .0035    .0873         .0000    .0000    .0000    .0000    .0000    .0000    .0000
 IX8     67638    .0952    .0064         .0033    .0888         .0000    .0000    .0000    .0000    .0000    .0000    .0000
 IX8     67665    .1586    .0070         .0032    .1516         .0000    .0000    .0000    .0000    .0000    .0000    .0000
```

Figure 6-20 Performance List Extended report

We corrected the problem and started the VSAM RLS workload again using TPNS. The workload was running again for about 15 minutes when we switched SMF data sets and achieved a copy of the relevant SMF records. After that, we processed a Performance Summary report to check the average response time of all transactions that belong to the VSAM application workload.

We used the existing Report Set VSAMSUM to produce the Performance Summary report. We performed again the steps in 6.3.4, “Creating a Report Set” on page 147, to create the Performance Summary report using Object List VSAMTRAN and Report Form VSUMSUM.

Object list VSAMTRAN was used as selection criteria to filter the transactions of the VSAM application. Report form VSMSUM was used to arrange the contents and the sequence of the title line on top of the Performance Summary report. Figure 6-21 shows that the average response time of transaction IX8 came down to 0.1183 seconds which is now in the range of our expectations.

```
 V1R3M0                                                CICS Performance Analyzer
                                                          Performance Summary
                                                 ____________________________________________
SUMM0001 Printed at 18:02:20 10/07/2003     Data from 17:37:24 10/07/2003 to 17:55:42 10/07/2003                    Page
```

Tran	Avg Response Time	Avg Dispatch Time	Avg User CPU Time	Avg Suspend Time	Avg FC Total	Avg RLS Wait Time	Avg FC Wait Time	Avg FCADD	Avg FCBROWSE	Avg FCDELETE	Avg FCGET	Avg FCPUT
HR1	.0079	.0027	.0017	.0052	2	.0045	.0000	0	0	0	1	1
HX1	.0085	.0028	.0017	.0057	2	.0048	.0000	0	0	0	1	1
IT1	.0081	.0032	.0025	.0049	0	.0000	.0000	0	0	0	0	0
IT2	.0090	.0058	.0030	.0031	17	.0025	.0000	0	0	0	17	0
IT8	.0186	.0067	.0030	.0119	14	.0108	.0000	3	0	0	9	2
IX1	.0091	.0032	.0025	.0059	0	.0000	.0000	0	0	0	0	0
IX2	.0115	.0060	.0031	.0054	17	.0039	.0000	0	0	0	17	0
IX8	.1183	.0069	.0031	.1114	14	.1104	.0000	3	0	0	9	2
PS2	.0076	.0064	.0032	.0012	18	.0003	.0000	0	0	0	18	0
PS3	.0107	.0095	.0046	.0013	34	.0003	.0000	0	0	0	34	0
PX2	.0090	.0069	.0032	.0021	18	.0010	.0000	0	0	0	18	0
PX3	.0105	.0092	.0046	.0013	34	.0006	.0000	0	0	0	34	0
SC2	.0381	.0087	.0034	.0294	18	.0288	.0000	0	0	0	9	9
SC4	.0091	.0068	.0027	.0023	9	.0013	.0000	9	0	0	0	0
SC6	.0175	.0047	.0019	.0128	4	.0117	.0000	1	0	1	2	0
SX2	.0363	.0071	.0034	.0292	18	.0285	.0000	0	0	0	9	9
SX4	.0070	.0051	.0027	.0018	9	.0009	.0000	9	0	0	0	0
SX6	.0148	.0040	.0019	.0108	4	.0100	.0000	1	0	1	2	0
TS1	.0028	.0016	.0012	.0012	0	.0000	.0000	0	0	0	0	0

Figure 6-21 Performance Summary report results

To make it easier to see comparisons, we again extracted the performance data of the VSAM application and created a chart using Microsoft Excel (Figure 6-22).

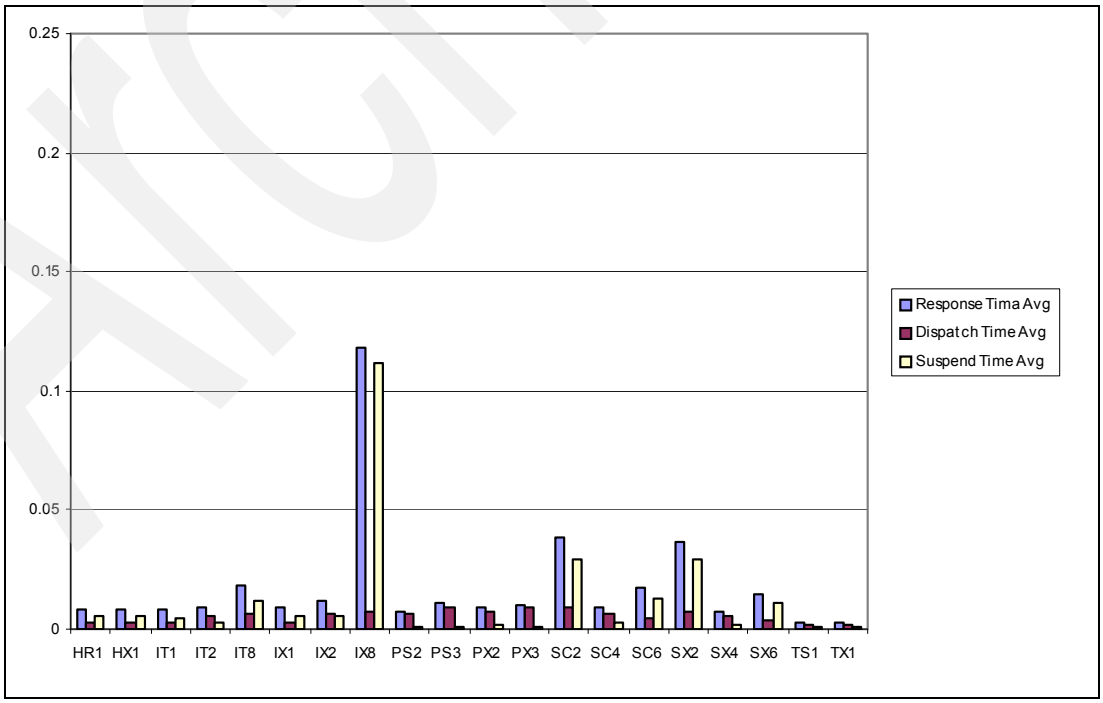

Figure 6-22 VSAM RLS application performance results

6.4 CICS VSAM LSR scenario description

When we finished analyzing the performance of the VSAM RLS application, we had to change the design of our environment slightly to perform a comparable performance analysis using LSR data sets (see Figure 6-23).

Since we do not use FORs anymore in our VSAM RLS environment, we eliminated AOR SCSCPAA4 from the LSR test environment. We did that because non-RLS files cannot be shared among CICS regions with update integrity. The environment we were going to use for the LSR performance scenario consists of TOR regions PTA1 and PTA2 and a single AOR PAA1. All VSAM application files will be allocated to AOR PAA1.

We logged on to AOR SCSCPAA1 and closed all VSAM application files that were still open in RLS access mode. To re-open them in non-RLS access mode, we entered the following command first:

```
CEMT SET DSN QUIESCE ALL
```

We installed a second set of the VSAM application file resource definitions which defined the files using the non-RLS access mode.

As we did for the RLS performance scenario, we used CICSPlex System Manager (SM) to manage our workload. The workload was generated using TPNS.

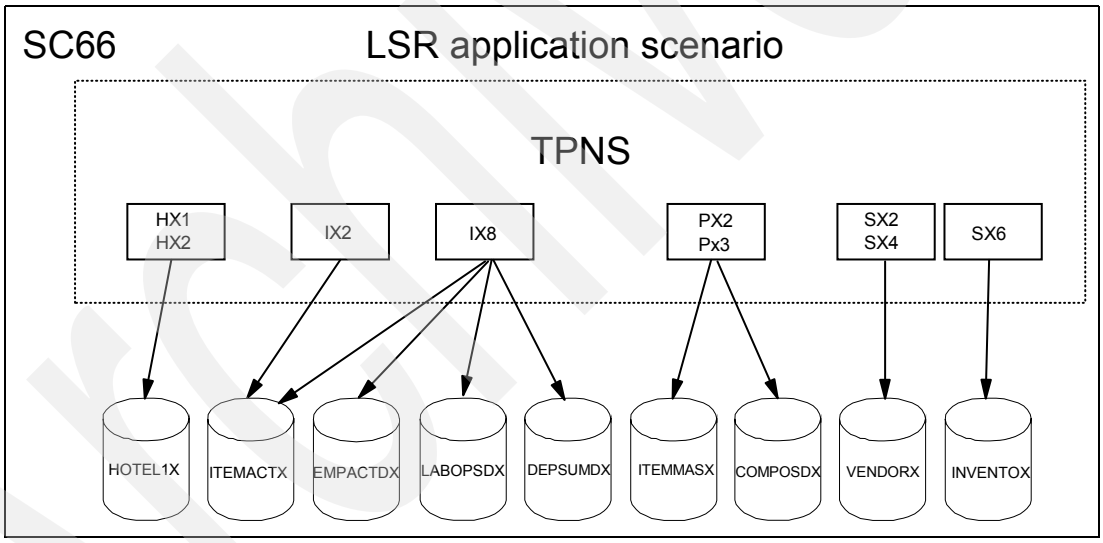

Figure 6-23 VSAM LSR application scenario

6.5 Running the VSAM LSR scenario

This section explains how we ran the LSR access mode scenario.

6.5.1 LSR workload generation

We used TPNS again to generate workload for the LSR performance scenario. The network deck had to be modified slightly to avoid generating transactions that belong to the first set of the VSAM application resource definitions as shown in Example 6-2. The second set of definitions can be used to invoke the application in RLS access mode as well as in LSR access mode. After modifying the TPNS network deck, a workload can be generated for transactions HX1, IX8, IX2, PX2, PX3, SX2, SX4, and SX8.

Example 6-2 Modified TPNS path and distribution probability

```
PATH  PX3,PX2,IX8,IX1,IX2,HX1,
      SX6,SX2,SX4,TX1
*
DIST  90,100,80,30,60,30,
      100,30,20,40
```

TPNS starts the workload through TORs PTA1 and PTA2. Both TORs route the transactions to AOR PAA1.

6.5.2 LSR application performance objectives

The VSAM LSR application that we plan to use for the CICS VSAM LSR performance scenario was already used for a number of other projects. Therefore, we already had some experience with its performance behavior. We never claimed that it was tuned to the maximum performance, but we had some expectations about its response time and suspend time. Since there is no service level agreement available for the application, we summarized our expectations regarding the performance behavior, based on our previous experience, in Table 6-2.

We expect the response times to be lower when the very same application is using LSR files rather than RLS files. When we document the results of this scenario, we create a chart that allows visual comparison between RLS and LSR response time.

Table 6-2 Performance expectations for an LSR scenario

Application	Transaction	Response average	Response maximum
HOTEL	HX1	< 0,05	0,1
INVENTOR	IX8	<0,15	0,2
INVENTOR	IX2	<0,015	0,02
SPECIFIC	PX2,PX3	<0,015	0,05
STOCK	SX2,SX4,SX6	<0,04	0,06

6.5.3 Analyzing the current average response time

We started the TPNS workload and kept it running for about fifteen minutes. It takes about three minutes for the TPNS CICS terminals to log on. While terminals are still in the process of logging on to CICS, the first transactions of the workload started running. To find the average response time of a smooth run, we used a time selection criteria to select performance data after all terminals had completed logging on. Thus, we do not measure our application performance data while additional CICS resources are consumed by the terminal logon process.

After about 15 minutes, we stopped TPNS and issued an /I SMF command to switch the active SMF data set. When the SMF data set was archived, we performed the following steps to provide a CICS Performance Analyzer Performance Summary report:

1. Update system definitions.
2. Select Report Set VSAMSUM.
3. Deactivate any active reports.

4. Edit the performance summary report we used during the RLS scenario.
   a. Use existing Report Form VSAMSUM.
   b. Add a report interval to the performance select statement.
   c. Use Object List VSAMTRAN as a selection criteria to filter VSAM application transactions.
5. Run the Performance Summary report.

Updating system definitions

On the Primary Option Menu screen, we selected option 1 (System Definitions). The System Definition Menu opens. We selected option 4 (Take-Up from SMF file) and pressed Enter. On the next screen, we entered the name of the archived SMF data set and pressed Enter to submit the job.

```
---------------------- System Definitions ----------------------
                      Data Take-Up from SMF
 Command ===>

         ********************************************
         *             Take-Up from SMF             *
         ********************************************

 CICS PA has completed extracting systems from the following
 SMF File:

 Data Set . . : 'SMFDATA.ALLRECS.G8446V00'

 Instructions:
   Press ENTER to continue adding the systems.
   Enter DEFER command to defer adding the systems.
   Enter END or CANCEL command to cancel adding the systems.
```

Figure 6-24 Take-Up from SMF update information

When we return to the System Definition Menu, a screen opens indicating that system definitions were updated by the Take-Up from SMF function. Figure 6-24 shows the information screen of the take-up system update process. On the System Definition Menu, we selected option 1 (Define Systems, SMF Files and Groups) and pressed Enter. On the next screen, we typed line action S next to the system entry for AOR SCSCPAA1. We checked that the SMF data set was updated correctly. If it was not updated, we could insert it manually.

Figure 6-25 shows the CICS system definition after running Take-Up from SMF.

```
---------------------- System Definitions ----------------------
                     Data Take-Up from SMF
 Command ===>

         *********************************************
         *             Take-Up from SMF              *
         *********************************************

 CICS PA has completed extracting systems from the following
 SMF File:

 Data Set . . : 'SMFDATA.ALLRECS.G8446V00'

 Instructions:
   Press ENTER to continue adding the systems.
   Enter DEFER command to defer adding the systems.
   Enter END or CANCEL command to cancel adding the systems.
```

Figure 6-25 CICS system definition after take-up update

Selecting report VSAMSUM

We used Report Set VSAMSUM before to provide a Performance Summary report of our VSAM RLS application. On the Primary Option Menu, we select option 2 (Report Sets). The Report Sets screen displays a list of available Report Sets. We used line action S next to Report Set VSAMSUM. The Edit Report Set screen displays.

Deactivating any performance reports

Active performance reports have YES in the Active column on the Edit Report Set screen. We can enter line action D next to any active performance reports to deactivate them. Deactivating performance reports means that they will not be included in the current Report Set. They are still available for later use.

Editing the Performance Summary report

On the Edit Report Set screen, we typed line action S next to the Performance Report Summary option. We used summary reports before. Therefore the Summary Reports screen displays a list of summary reports that were created already. If no summary reports are available, the Summary Reports screen is bypassed and a screen to create the first summary report is displayed instead.

From the reports summary list, we selected the summary report that we created for the VSAM RLS scenario. The screen to edit the Performance Summary report is displayed. We checked that the correct APPLID is specified, which is SCSCPAA1. Next, we specified the name of the Summary Report Form, which is VSAMSUM.

To specify a report interval and selection criteria, under Selection Criteria, we typed line action S next to the performance option. The screen displays a list of performance selection criteria or a screen that allows the editing of the performance select statement. We created selection criteria for Performance Summary reports before. A list of Performance Selection Criteria should be displayed. On the list, we typed line action S next to the selection criteria we used for the VSAM RLS scenario. Figure 6-26 shows the Performance Select Statement screen.

```
File  Edit  Object Lists  Options  Help
--------------------------------------------------------------------------------
                    VSAMSUM - Performance Select Statement  Row 1 of 9 More: >
Command ===>                                                  Scroll ===> CSR

         Active  --------------- Report Interval ----------------
   Inc   Start   -------- From ---------  --------- To ----------
   Exc   Stop    MM/DD/YYYY  HH:MM:SS.TH  MM/DD/YYYY  HH:MM:SS.TH
   INC   ACTIVE  10/11/2003  18:00:00.00  10/11/2003  18:08:00.00

--------------------------------------------------------------------------------

   Inc  Field             --- Value or Range ---   Object
/  Exc  Name +    Type    Value/From   To          List +
   INC  TRAN                                       VSAMTRAN
********************************* End of list ********************************
```

Figure 6-26 Performance Select Statement screen

We included the start and stop time of the report interval that we were going to monitor. We started investigating SMF records when all terminals were logged on and the entire workload was running. After that, we included selection criteria specifying all the transactions that we used in the workload. We specified Object List `VSAMTRAN` that still contains all of the transactions of the workload. During the VSAM LSR performance scenario, we simply used the second set of transactions, which are the ones that have X characters in the middle of their name. We only had SMF records for the second set of transaction, so we can still use the Object List VSAMTRAN. There will not be any filter matches for the first set of transactions. We then pressed F3 repeatedly until we returned to the Edit Report Set screen.

Running the Report Set

On the Edit Report Set screen, we entered the `RUN` line action next to the Summary report and pressed Enter to display the Run Report Set screen. We did not change any information on the screen, and pressed Enter again to submit the job to generate the report.

```
                                                Performance Summary Report
                                                ___________________________________________
SUMM0001 Printed at 18:17:13 10/11/2003     Data from 18:00:17 10/11/2003 to 18:08:00 10/11/2003                    Page       1

            Avg       Max       Avg       Avg       Avg       Avg       Avg       Avg       Avg       Avg       Avg       Avg       Avg
Tran     Response  Response  Dispatch  User CPU  Suspend  FC Total  RLS Wait  FC Wait    FCADD  FCBROWSE  FCDELETE     FCGET     FCPUT
            Time      Time      Time      Time      Time              Time      Time
HX1        .0878     .4659     .0027     .0018     .0851         2    .0000     .0093         0         0         0         1         1
IX1        .0100     .1757     .0041     .0025     .0058         0    .0000     .0000         0         0         0         0         0
IX2        .9831    2.9364     .0054     .0040     .9777        17    .0000     .0937         0         0         0        17         0
IX8       1.8818    6.6992     .0055     .0038    1.8763        14    .0000     .1745         3         0         0         9         2
PX2       1.0209    3.2356     .0063     .0040    1.0146        18    .0000     .0422         0         0         0        18         0
PX3       2.3924    9.5941     .0070     .0050    2.3853        34    .0000     .0220         0         0         0        34         0
SX2        .6419    2.2321     .0055     .0042     .6364        18    .0000     .0675         0         0         0         9         9
SX4        .7818    2.7859     .0043     .0034     .7775         9    .0000     .0364         9         0         0         0         0
SX6        .2384    1.4432     .0030     .0021     .2353         4    .0000     .0190         1         0         1         2         0
TX1        .0030     .1027     .0015     .0011     .0015         0    .0000     .0000         0         0         0         0         0
```

Figure 6-27 LSR Performance Summary report

6.5.4 Tuning changes to LSR

As you can see in Figure 6-27, response times are far higher than we expected. When we installed the CICS file resource definitions, we had to set up an LSRPOOL definition to share strings and buffers among the LSR files. We did not specify enough strings and buffers to run

the optimum number of tasks concurrently. Correct specification of number of VSAM strings and buffers is crucial for good performance of an LSR pool.

- STRINGS is used to determine the number of strings and thereby the number of concurrent operations possible against the LSR pool (assuming that there are buffers available).
- The number of buffers can have a significant effect on performance. The use of many buffers can permit multiple concurrent operations (if there are the corresponding number of VSAM strings available). It can also increase chances of successful buffer lookaside with the resulting reduction in physical I/O operations.

We specified the appropriate values for strings and buffers in our LSRPOOL definitions and invoked a performance summary report again.

6.5.5 Analyzing results

We applied the changes to the file resource definitions and started TPNS workload again. After about 15 minutes, we stopped TPNS and performed the following steps to generate a performance summary report again:

1. Update system definitions.
2. Select Report Set VSAMSUM.
3. Select Performance Summary report.
4. Edit the Performance Summary report:
   a. Use the existing Report Form VSAMSUM.
   b. Update the report interval to the Performance select statement.
   c. Use Object List VSAMTRAN as selection criteria to filter VSAM application transactions.
5. Generate and submit performance list report JCL.

Figure 6-28 shows the Performance Summary report after we tuned the LSRPOOL. Response times and suspend times decreased significantly.

Performance Summary

SUMM0001 Printed at 18:45:37 10/11/2003 Data from 18:32:56 10/11/2003 to 18:36:27 10/11/2003 Page 1

Tran	Avg Response Time	Max Response Time	Avg Dispatch Time	Avg User CPU Time	Avg Suspend Time	Avg FC Total	Avg RLS Wait Time	Avg FC Wait Time	Avg FCADD	Avg FCBROWSE	Avg FCDELETE	Avg FCGET	Avg FCPUT
HX1	.0126	.1730	.0028	.0017	.0098	2	.0000	.0066	0	0	0	1	1
IX1	.0125	.2825	.0038	.0025	.0087	0	.0000	.0000	0	0	0	0	0
IX2	.0315	.4220	.0042	.0029	.0272	17	.0000	.0202	0	0	0	17	0
IX8	.1477	.9045	.0052	.0032	.1425	14	.0000	.1297	3	0	0	9	2
PX2	.0160	.3446	.0043	.0031	.0117	18	.0000	.0067	0	0	0	18	0
PX3	.0169	.4148	.0065	.0042	.0104	34	.0000	.0063	0	0	0	34	0
SX2	.0437	.3044	.0046	.0037	.0391	18	.0000	.0331	0	0	0	9	9
SX4	.0128	.1965	.0048	.0027	.0080	9	.0000	.0046	9	0	0	0	0
SX6	.0157	.2742	.0032	.0020	.0126	4	.0000	.0086	1	0	1	2	0
TX1	.0040	.1039	.0022	.0012	.0019	0	.0000	.0000	0	0	0	0	0

Figure 6-28 LSR Performance Summary report after tuning changes

To show visually the difference between the performance behavior before and after tuning the file resource definitions, we created a chart. The chart shown in Figure 6-29 compares response times per transaction before and after tuning the LSRPOOL.

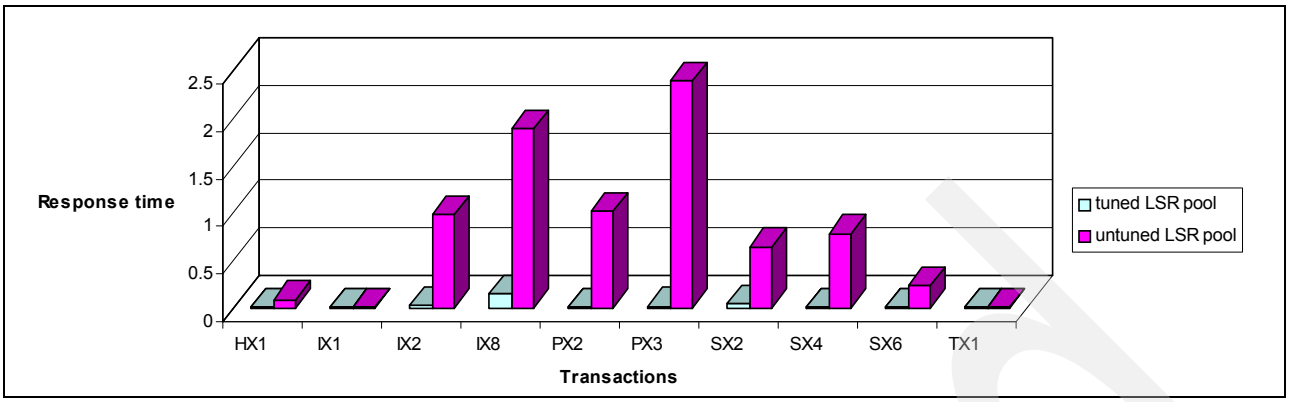

Figure 6-29 VSAM LSR performance scenario before and after tuning

6.6 Application performance RLS versus LSR

Finally, we used the Performance Summary reports for both of our scenarios (RLS and LSR) to extract data and create a chart that visually shows the comparison between response times in the case of RLS and LSR access mode. As we used the same application, data sets, and the same CICS environment for both scenarios, we can conclude that in our case the response times provided by RLS access are better than those provided by LSR access. The chart shown in Figure 6-30 illustrates the difference.

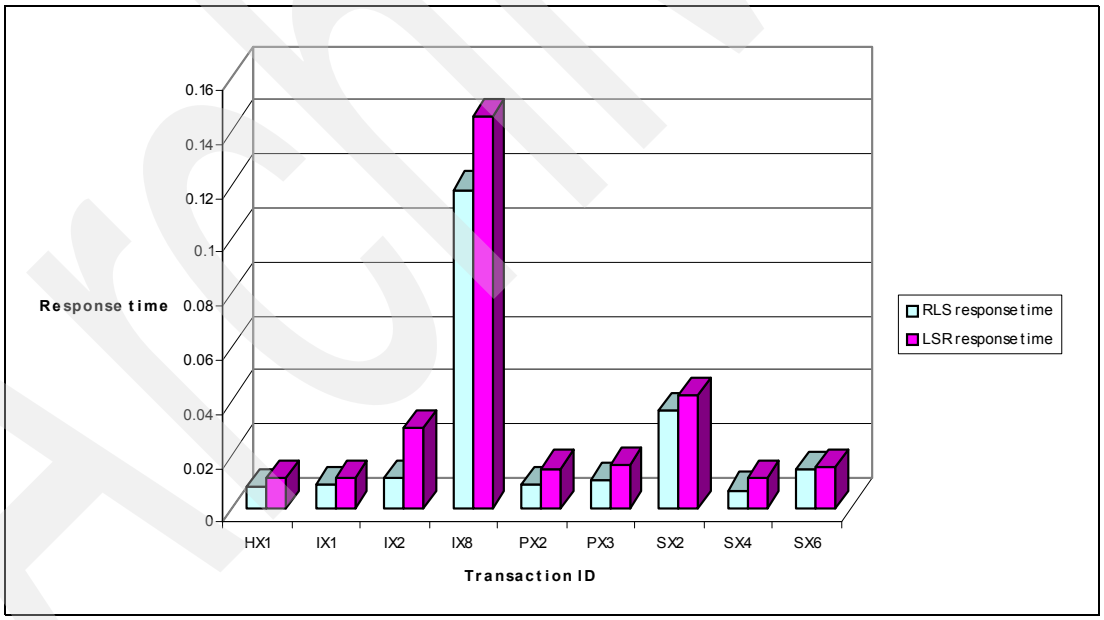

Figure 6-30 VSAM RLS versus LSR

6.7 Transaction Resource Monitoring

Transaction Resource is a new class of data for the CICS Monitoring Facility. The Transaction Resource data is collected at transaction termination for each resource specified in the MCT on the TYPE=INITIAL macro. A new system initialization parameter, MNRES=(OFF | ON),

specifies whether Transaction Resource Monitoring is to be made active during CICS initialization.

A new parameter has been added to the DFHMCT TYPE=INITIAL macro, FILE=(8 | number). This FILE option specifies the maximum number of files for which you want CICS to perform Transaction Resource Monitoring. This option is applicable only if Transaction Resource Monitoring is enabled, either by specifying `MNRES=ON` as a system initialization parameter (together with `MN=ON`), or by enabling it dynamically using either of the following commands:

```
EXEC CICS
CEMT SET MONITOR CICS
```

CICS standard monitoring performance class data includes totals for *all* files accessed by a transaction. Transaction Resource Monitoring collects information about individual files, up to the number of files specified. When the FILE parameter was first introduced, the default was FILE=0. With the code implemented by APARs PQ76701 and PQ76695, the default is now FILE=8.

The data collected is:

- File name
- Number and total time of file get requests
- Number and total time of file put requests
- Number and total time of file browse requests
- Number and total time of file add requests
- Number and total time of file delete requests
- Total number and total time of all requests against the file
- File access method request count
- File I/O wait time and number of waits
- RLS-mode file I/O wait time
- Coupling facility data table (CFDT) I/O wait time

The default value is 8 (eight).

Number specifies the maximum number of files, in the range 1 through 64, for which CICS is to perform Transaction Resource Monitoring. CICS collects monitoring performance data at the resource level for each file accessed by a transaction, up to the maximum specified by *number*. If the transaction accesses more files than the number specified, any files over the maximum are ignored, but a flag is set to indicate that the transaction has exceeded the file limit.

If you specify `FILE=0`, specifying `MNRES=ON` either as a system initialization parameter or dynamically while CICS is running, has no effect and Transaction Resource Monitoring data is not collected for files.

The monitoring domain exit, XMNOUT, is invoked at a new event point before a Transaction Resource Monitoring record is written to the transaction resource record buffer. This new invocation means that if performance class and Transaction Resource Monitoring are both active in your CICS region, XMNOUT can be invoked twice for the same event.

You can map the new transaction resource data using the new CICS monitoring domain copybook, DFHMNRDS.

The RESRCECLASS option (RESRCE | NORESRCE) was added to the CEMT INQUIRE and CEMT SET MONITOR commands to support the transaction resource class. The RESRCECLASS option has also been added to the EXEC CICS INQUIRE and SET MONITOR commands.

CICS PA and Transaction Resource Monitoring

You can use CICS PA to report on the new Transaction Resource Monitoring class records. We describe the process we went through to obtain a CICS PA Transaction Resource Usage Report.

We used TPNS to run our VSAM workload as discussed in Chapter 6, “VSAM application performance analysis and Transaction Resource Monitoring support” on page 139. After the workload completed, we switched the SMF data sets using the I SMF command. We took the copied SMF data set and added it to CICS PA. Figure 6-31 shows the data set added to the CICS regions SCSCPAA1 System Definition.

```
---------------------------- System Definitions -----------------------------
   File  Edit  Dictionary  View  Options  Help
 ---------------------------------------------------------------------------
                                CICS System              Row 1 of 1 More: >
 Command ===>                                            Scroll ===> CSR

 CICS System definition:
  APPLID . . . . . . . . SCSCPAA1  MVS Image . . SC66
  Description  . . . . . System added by take-up
  CICS Version (VRM) . . 620
  MCT Suffix . . . . . . I3
  MCT Load Library . . . 'CICSSYSF.APPL62.LOADLIB'
  SDFHLOAD Library . . . 'CICSTS22.CICS.SDFHLOAD'
  Dictionary DSN . . . . 'CICSLS5.DFHMNREC'

 / Exc             SMF Data Set Name +                UNIT +  SEQ VOLSER +
       'SMFDATA.ALLRECS.G8885V00'                    DASD
 ********************************* End of list ****************************
```

Figure 6-31 SCSCPAA1 System Definition

We also included the MCT Suffix (I3), which was used at CICS Initialization. Example 6-3 shows the DFHMCT TYPE=INITIAL statement which includes the new option FILE.

Example 6-3 DFHMCT

```
I3       DFHMCT TYPE=INITIAL,                                          *
              APPLNAME=YES,                                            *
              FILE=9,                                                  *
              SUFFIX=I3
```

We then needed to create a new Report Set to report on the transaction resource data. We did this by specifying `NEW TRANSREP` on the Report Sets screen. When the new Report Set was displayed, we selected the File Usage Summary Report option (Figure 6-32).

```
File  Systems  Confirm  Options  Help
--------------------------------------------------------------------------------
EDIT                      Report Set - TRANSREP                   Row 15 of 34
Command ===>                                                   Scroll ===> CSR

Description . . . CICS PA Report Set

Enter "/" to select action.

             ** Reports **                            Active
                  Workload Activity                     No
     -       Exception Reports                          No
                  List                                  No
                  Summary                               No
     -       Transaction Resource Usage Reports         No
             S    File Usage Summary                    No
                  Temporary Storage Usage Summary       No
                  Transaction Resource Usage List       No
     -       Subsystem Reports                          No
                  DB2                                   No
                  WebSphere MQ                          No
     -       System Reports                             No
                  System Logger                         No
     -       Performance Graphs                         No
```

Figure 6-32 Select Transaction Resource Usage: File Usage Summary

On the next screen, the File Usage Summary Report, we selected the default options, that is, Summary Reports for Transaction File Usage, File Usage broken down by transaction IDs and transaction totals (Figure 6-33).

```
File  Systems  Options  Help
--------------------------------------------------------------------------------
                     TRANSREP - File Usage Summary Report
Command ===>

System Selection:                        Report Output:
 APPLID . .          +                    DDname . . . . . . . . . FILE0001
 Image  . .          +                    Print Lines per Page . .      (1-255)
 Group  . .          +

Summary Reports Required:
 /  Transaction File Usage
 /  File Usage
    /  Break down by Transaction ID
    /  Include Transaction Totals

Report Format:
 Title  . .


Selection Criteria:
    Performance
```

Figure 6-33 File Usage Summary Report options

We pressed the PF3 key until we returned to the Edit Report Set screen, used the `RUN` line action command on the Transaction Resource Usage List report, added the CICS APPLID to the Run Report Set screen, and submitted the job. Figure 6-34 shows part of the report produced from this run. It shows two transaction (HX2 and IT2). HX2 made file requests to file HOTEL1X and IT2 made file requests to something called *CTLACB* and ITEMACT. The *CTLACB* indicates that we suffered a file control wait. The resource name of *CTLACB* shows that the resource being waited for is the RLS ConTroL ACB.

```
 V1R3M0                                          CICS Performance Analyzer
                                               Transaction File Usage Summary
                                          ____________________________________________
RESU0001 Printed at 17:11:33 11/05/2003    Data from 13:07:37 11/05/2003 to 17:05:35 11/05/2003    APPLID SCSCPAA1     Page       3


                                  ******************** FC Calls **********************  ******* I/O Waits ********   AccMeth
Tran  File     #Tasks               Get      Put    Browse     Add    Delete   Total      File      RLS     CFDT    Requests
---- -------- -------             -------- -------- -------- -------- -------- --------  -------- -------- --------  --------
HX2  HOTEL1X        2 Elapse Avg    .0003    .0000    .0000    .0002    .0000    .0005     .0000    .0000    .0000
                              Max    .0004    .0000    .0000    .0002    .0000    .0006     .0000    .0000    .0000
                        Count  Avg        1        0        0        1        0        2         0        0        0         3
                              Max        1        0        0        1        0        2         0        0        0         3

                                  ******************** FC Calls **********************  ******* I/O Waits ********   AccMeth
Tran           #Tasks               Get      Put    Browse     Add    Delete   Total      File      RLS     CFDT    Requests
----          -------             -------- -------- -------- -------- -------- --------  -------- -------- --------  --------
IT2                 7 Elapse Avg                                                          .0000    .0017    .0000
                              Max                                                          .0000    .0119    .0000
                        Count  Avg       17        0        0        0        0       17         0        0        0        18
                              Max       17        0        0        0        0       17         0        1        0        18

                                  ******************** FC Calls **********************  ******* I/O Waits ********   AccMeth
     File      #Tasks               Get      Put    Browse     Add    Delete   Total      File      RLS     CFDT    Requests
    -------- -------             -------- -------- -------- -------- -------- --------  -------- -------- --------  --------
    *CTLACB*        6 Elapse Avg    .0000    .0000    .0000    .0000    .0000    .0000     .0000    .0000    .0000
                              Max    .0000    .0000    .0000    .0000    .0000    .0000     .0000    .0000    .0000
                        Count  Avg        0        0        0        0        0        0         0        0        0         1
                              Max        0        0        0        0        0        0         0        0        0         1

    ITEMACT         6 Elapse Avg    .0040    .0000    .0000    .0000    .0000    .0040     .0000    .0020    .0000
                              Max    .0140    .0000    .0000    .0000    .0000    .0140     .0000    .0119    .0000
                        Count  Avg       17        0        0        0        0       17         0        0        0        17
                              Max       17        0        0        0        0       17         0        1        0        17
```

Figure 6-34 Transaction File Usage Summary report

Figure 6-35 shows the File Usage Summary report, a summary of File usage broken down by transaction ID.

```
V1R3M0                                          CICS Performance Analyzer
                                                     File Usage Summary
                                          ____________________________________________
RESU0001 Printed at 17:11:33 11/05/2003    Data from 13:07:37 11/05/2003 to 17:05:35 11/05/2003    APPLID SCSCPAA1     Page      14


                                  ******************** FC Calls **********************  ******* I/O Waits ********   AccMeth
File     Tran  #Tasks               Get      Put    Browse     Add    Delete   Total      File      RLS     CFDT    Requests
-------- ---- -------             -------- -------- -------- -------- -------- --------  -------- -------- --------  --------
HOTEL1X  HX1        3 Elapse Avg    .0003    .0044    .0000    .0000    .0000    .0047     .0000    .0022    .0000
                              Max    .0004    .0054    .0000    .0000    .0000    .0057     .0000    .0025    .0000
                        Count  Avg        1        1        0        0        0        2         0        1        0         2
                              Max        1        1        0        0        0        2         0        1        0         2

         HX2        2 Elapse Avg    .0003    .0000    .0000    .0002    .0000    .0005     .0000    .0000    .0000
                              Max    .0004    .0000    .0000    .0002    .0000    .0006     .0000    .0000    .0000
                        Count  Avg        1        0        0        1        0        2         0        0        0         3
                              Max        1        0        0        1        0        2         0        0        0         3

         Totl       5 Elapse Avg    .0003    .0026    .0000    .0001    .0000    .0030     .0000    .0013    .0000
                              Max    .0010    .0132    .0000    .0004    .0000    .0141     .0000    .0066    .0000
                        Count  Avg        1        0        0        0        0        2         0        0        0         2
                              Max        3        3        0        2        0        6         0        3        0         6
```

Figure 6-35 File Usage Summary report

In this report, we the file HOTEL1X is displayed with the two transactions, HX1 and HX2, which made a sort of file request to the file. Following is the total of all transactions file requests for the file being reported.

We then ran the Transaction Resource Usage List report by selecting it from the Report Set screen. When we did this, the Transaction Resource Usage Report screen (Figure 6-36) is displayed. We selected the File Usage report in the Detailed List Reports Required section, pressed F3 until we returned to the Reports Set screen, and then used the RUN line action on the report to submit the job.

```
File  Systems  Options  Help
-------------------------------------------------------------------------------
                 TRANSREP - Transaction Resource Usage Report
Command ===>

System Selection:                        Report Output:
 APPLID . .           +                   DDname . . . . . . . . . RESU0001
 Image  . .           +                   Print Lines per Page . .      (1-255)
 Group  . .           +

Detailed List Reports Required:
 /  File Usage
    Temporary Storage

Report Format:
 Title  . .


Selection Criteria:
    Performance
```

Figure 6-36 Select Transaction Resource Usage List: File Usage

When the job completed, we received the report shown in Figure 6-37.

```
 V1R3M0                                          CICS Performance Analyzer
                                               Transaction Resource Usage List
                                          ____________________________________________
RESU0001 Printed at 18:13:47 11/05/2003    Data from 13:07:37 11/05/2003                                          Page       3


                                     Request          Fcty  Conn                                   UOW R              Response
Tran  Userid  SC TranType Term   LUName   Type   Program  T/Name Name      NETName       APPLID    Task Seq T   Stop Time    Time
---- -------- -- -------- ----  -------- ------- -------- ------ ---- ----------------- --------   ---- --- - ------------ --------
PX3  CICSUSER TP U        T11   SCSCPTA1 AP:     DSWPX3VV S/P082 PTA1 USIBMSC.SCSTP082  SCSCPAA1    106   1 T 16:58:44.821    .0083

                        ******************** FC Calls *********************  ******* I/O Waits ********   AccMeth
      File                Get      Put    Browse     Add    Delete   Total      File      RLS     CFDT    Requests
     --------           -------- -------- -------- -------- -------- --------  -------- -------- --------  --------
     PRODCONX    Elapse    .0003    .0000    .0000    .0000    .0000    .0003     .0000    .0000    .0000
                 Count         2        0        0        0        0        2         0        0        0         2

     ITEMMASX    Elapse    .0003    .0000    .0000    .0000    .0000    .0003     .0000    .0000    .0000
                 Count         2        0        0        0        0        2         0        0        0         2

     LABOPSDX    Elapse    .0027    .0000    .0000    .0000    .0000    .0027     .0000    .0000    .0000
                 Count        30        0        0        0        0       30         0        0        0        30

     *CTLACB*    Elapse    .0000    .0000    .0000    .0000    .0000    .0000     .0000    .0000    .0000
                 Count         0        0        0        0        0        0         0        0        0         1
```

Figure 6-37 Usage List

The Transaction Resource Usage List report provides a detailed list of transaction resource class records. The report consists of two sections:

- The Task Identification section that identifies the CICS task
- The Resource section(s) associated with the CICS task immediately above it

This report can be very useful for analyzing transaction resource usage.

6.8 Conclusion

Using CICS PA reports and extracts, we tuned our LSR pool. We also compared performances of a set of VSAM applications running in our environment when VSAM data sets were open in either LSR or RLS mode.

7

Tuning the CICS DB2 attachment facility

This chapter provides a brief overview of the CICS DB2 attachment facility and CICS DB2 accounting and monitoring. Then it describes the use of CICS Performance Analyzer (PA) and the reports it can produce for a CICS region running with a DB2 workload.

Two scenarios in this chapter demonstrate CICS PA reports for CICS regions running a CICS Transaction Server for OS/390 V1.3 and CICS Transaction Server for z/OS V2.2. The CICS regions are connected to DB2 V7.1 subsystem.

This chapter also discusses the system setup of the CICS regions and describes the changes provided in CICS Transaction Server for z/OS V2.2 and the Open Transaction Environment (OTE).

Note: These scenarios were used to provide situations that allow us to demonstrate the use of CICS PA reports when running with a CICS DB2 workload. The CICS regions were not necessarily tuned for peak performance. In some cases, they had a high level of tracing active. Therefore, these scenarios and the results provided are for demonstration purposes only. They do not provide definitive results for a customer environment.

7.1 CICS and DB2

This section describe functions provided by the CICS DB2 Attachment Facility. For more information, refer to the “Accounting and monitoring in a CICS DB2 environment” chapter in the *CICS Transaction Server for z/OS CICS DB2 Guide*, SC34-6014.

7.1.1 Overview of the CICS DB2 Attachment Facility

The CICS DB2 Attachment Facility provides a multithread connection between the two environments. The architecture allows a CICS task to access both DB2 and CICS recoverable resources with data integrity. Each CICS transaction accessing DB2 uses a different MVS task control block (TCB), thus exploiting a multiprocessor’s capability for overlapped processing.

The CICS DB2 Attachment Facility enables application programs running under CICS to forward DB2 commands from CICS, by establishing a connection and a communication path between CICS and DB2 subsystems.

DB2 provides attachment facilities for MVS subsystems and batch address spaces to access DB2 resources through connections established by using the MVS Subsystem Interface (SSI) protocol. The CICS connection allows access to DB2 resources from a transaction that is also accessing DLI and VSAM resources. Before a CICS subsystem can access DB2 resources, it must establish a connection to DB2 and then create one or more threads on the connection. The connection establishes a communication path between the subsystem or address space and the DB2 subsystem.

7.1.2 Functions

The CICS DB2 attachment facility provides three major functions:

- Application programming interface (API)

  DB2 provides a language interface module that allows a CICS application written in Assembler, C, COBOL, PL/I, or Java to access DB2 databases by using the data manipulation language (DML) subset of SQL. It also allows you to define DB2 objects and control authority (GRANT and REVOKE) by using the data description language (DDL) subset of SQL. Updates to DB2 resources are fully synchronized with updates to CICS-protected resources such as file control, temporary storage, intrapartition transient data, and DL/I databases. The CICS Attachment Facility controls the routing of SQL statements to DB2 and the synchronization of commit processing between the two subsystems through the CICS task-related user exit (TRUE) function.

- Attachment commands

  Attachment commands display and control the status of the attachment facility and are issued through the supplied CICS transaction, DSNC. You can use the attachment commands to start the connection to DB2 (STRT), stop the connection to DB2 (STOP), display CICS-DB2 thread status and statistics (DISP), and modify the characteristics of the connection to DB2 (MODI). You control the use of these CICS attachment facility commands through the standard CICS security mechanisms. The commands are not routed to DB2, so there is no DB2 authorization checking.

- DB2 commands

  After a connection between CICS and DB2 is established, you can use the CICS-supplied transaction, DSNC, to issue DB2 commands to the DB2 system. The DB2 commands are routed to DB2 for processing. DB2 checks that the user has DB2 authority to issue the commands. The commands are used to display and control the status of the DB2 system.

All DB2 commands that you enter through CICS must start with a dash (-) to show that the command is a DB2 command rather than an attachment command.

7.1.3 CICS and DB2 connectivity

Two or more CICS systems can share the same DB2 subsystem. However, each CICS system can be connected to only one DB2 subsystem at the same time. When an application program operating in the CICS environment issues its first SQL request, CICS and DB2 process the request as follows:

- A language interface, or stub, DSNCLI, that is link-edited with the application program calls the CICS resource manager interface (RMI).
- The RMI processes the request, and passes control to the CICS DB2 Attachment Facility's task-related user exit (TRUE), the module that invokes DB2 for each task.
- The CICS DB2 Attachment Facility schedules a thread for the transaction. At this stage, DB2 checks authorization, and locates the correct application plan.
- DB2 takes control, and the CICS DB2 Attachment Facility waits while DB2 services the request.
- When the SQL request completes, DB2 passes the requested data back to the CICS DB2 Attachment Facility.
- CICS now regains control, and the CICS DB2 Attachment Facility passes the data and returns control to the CICS application program.

Within the connection, a thread establishes a bidirectional path between a user in a subsystem or batch address space and specific DB2 resources (application plan or command processor). Multiple threads can be established between a connected CICS and DB2. In CICS, there is a thread for each active CICS transaction accessing DB2.

The types of thread provided by the CICS DB2 attachment facility are:

- **Command threads**: These threads are reserved by the CICS DB2 attachment facility for issuing commands to DB2 using the DSNC transaction.
- **Entry threads**: These threads are specially defined threads intended for transactions with special requirements. You can instruct the CICS DB2 attachment facility to give entry threads to particular CICS transactions. DB2 entry threads can be protected. This is achieved by specifying PROTECTNUM(x) and THREADLIMIT(x) in the DB2ENTRY definition. A new protected thread is only created if an existing one is not available for reuse. A thread is protected, if at thread termination the number of protected threads is less than the PROTECTNUM value (and no new work is queued). After the thread is marked as protected, it is terminated, if it is unused for two consecutive purge cycles.
- **Pool threads** These threads are used for all transactions and commands that are not using an entry or DB2 command thread.

Each CICS transaction that accesses DB2 needs a thread, an individual connection into DB2. Each thread runs under a thread task control block (thread TCB) that belongs to CICS. CICS and DB2 both have connection control blocks linked to the thread TCB. The nature of the thread TCBs, and the way in which they are linked to the DB2 connection control block (and therefore the thread), differs depending on the version of DB2 to which CICS is connected.

While CICS is connecting to a DB2 subsystem, it checks the DB2 release level of the subsystem. If CICS is connecting to DB2 Version 6 or later, the CICS DB2 task-related user exit (TRUE, the module that invokes DB2 for each task) is automatically enabled as open API, so it can use the CICS OTE. If CICS is connecting to DB2 Version 5 or earlier, the TRUE is not enabled as open API, and does not use OTE.

Thread TCBs in a non-Open Transaction Environment

When CICS is not using the OTE, the thread TCBs are subtasks created by the CICS DB2 Attachment Facility to run each thread that is requested by transactions or DB2 commands. The TRUE itself remains on the CICS main TCB, the QR TCB.

Figure 7-1 summarizes how thread TCBs operate in a non-Open Transaction Environment. Here we can see CICS using a thread to access DB2. The application has invoked the RMI, which invokes the CICS DB2 Attachment Facility's TRUE. The CICS DB2 TRUE, operating on the CICS main TCB, uses an assembly consisting of a subtask TCB, a CSUB, and a DB2 connection control block to run a thread into DB2. The plan associated with the thread is held in DB2. The second thread in the diagram is one that is not currently in use, but is protected.

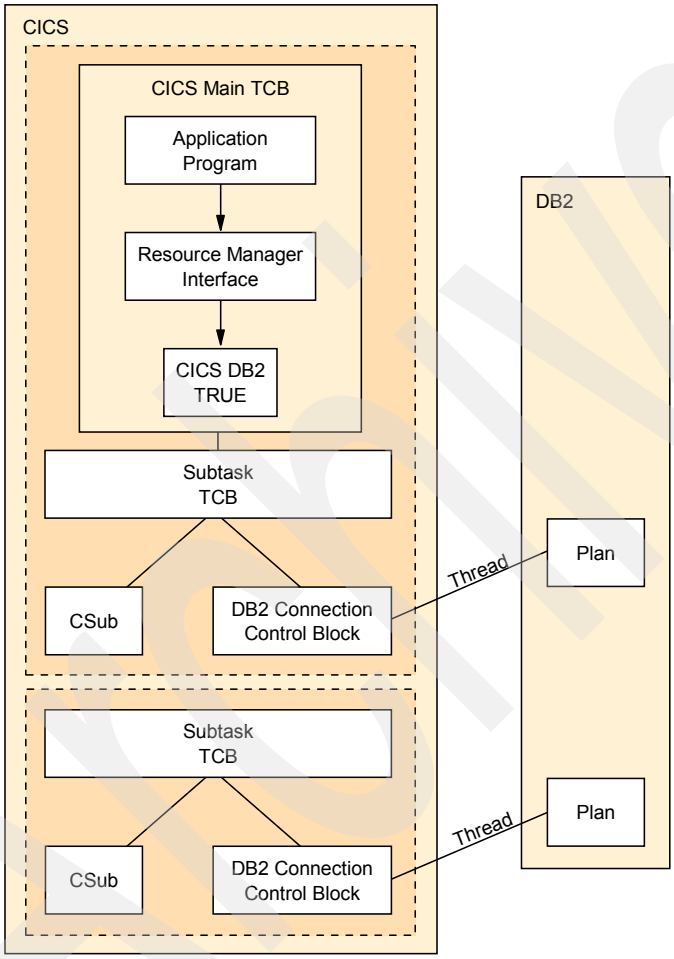

Figure 7-1 Thread TCBs in a non-OTE

For a CICS DB2 application to run on a thread TCB, a TCB switch is required from the CICS main TCB (QR TCB) onto the thread TCB. On the return from DB2, another switch is required back to the QR TCB. See Figure 7-2 for an example.

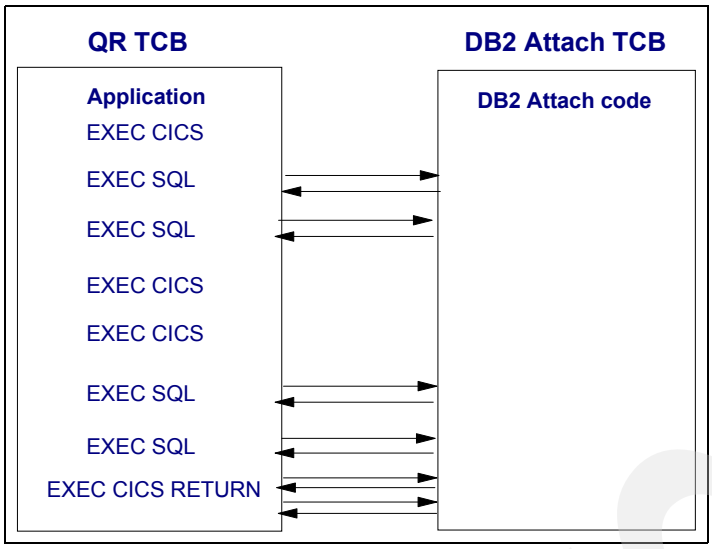

Figure 7-2 TCB Switching in CICS Transaction Server (TS) V1.3

Thread TCBs in Open Transaction Environment

When CICS is using the OTE, the CICS DB2 Attachment Facility uses open TCBs (L8 mode) as the thread TCBs. Open TCBs perform other tasks besides accessing DB2 resources. In the Open Transaction Environment, the CICS DB2 TRUE runs on an open TCB rather than on the CICS main TCB.

An application can also be defined as threadsafe, in which case it can continue to run on the L8 TCB after the DB2 SQL request has completed, including running EXEC CICS commands that normally run on the QR TCB. A threadsafe application must provide serialization of shared resources so they cannot be accessed by other user tasks at the same time. If the application is determined to be threadsafe, then you can define it using the CONCURRENCY(THREADSAFE) attribute on the PROGRAM definition. Note that some EXEC CICS commands are non-threadsafe.

Before the first SQL request, the application program runs on the CICS main TCB, the QR TCB. When it makes an SQL request and invokes the TRUE, control passes to the L8 TCB, and DB2 processing is carried out. On return from DB2, if the application program is threadsafe, it now continues to run on the L8 TCB, avoiding an expensive TCB switch.

Refer to the *CICS Transaction Server for z/OS CICS Application Programming Reference*, SC34-5994, for a more detailed explanation of threadsafe programs.

Figure 7-3 shows CICS using a thread to access DB2 in the Open Transaction Environment. The CICS DB2 TRUE was invoked by the RMI, and is operating on an open TCB. The CICS DB2 Attachment Facility has associated a CSUB and a DB2 connection control block with the open TCB. The DB2 connection control block has a thread into DB2. The plan associated with the thread is held in DB2. The diagram also shows a thread that is not currently in use, but is protected, and two open TCBs that are available for reuse.

If an application program in the OTE is not threadsafe, the CICS DB2 TRUE still runs on an L8 TCB, but the application program runs on the QR TCB throughout the task. Every time the program makes an SQL request, CICS switches from the QR TCB to the L8 TCB and back again.

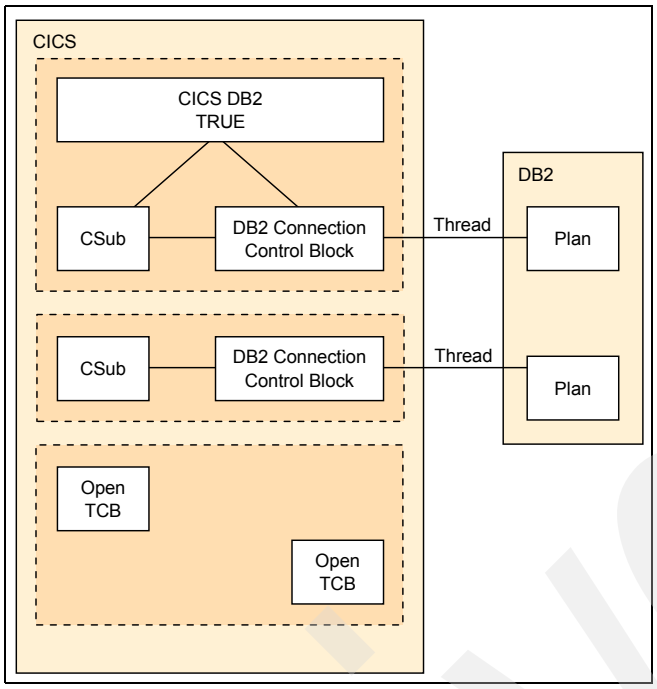

Figure 7-3 Thread TCBs in the Open Transaction Environment

Executing a CICS application which has been defined with the CONCURRENCY(THREADSAFE) attribute on the PROGRAM definition, but contains a non-threadsafe EXEC CICS command, is considered threadsafe (and continues to execute on the L8 open TCB) until the time when control is switched to the QR TCB to execute the non-threadsafe EXEC CICS command. See Figure 7-4 for an example.

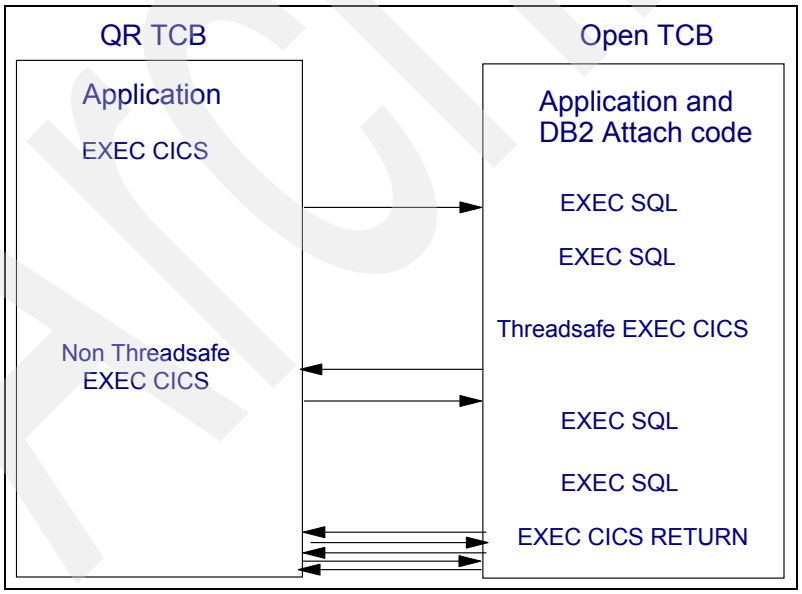

Figure 7-4 TCB Switching in CICS TS V2.2 using open TCBs

To define the number of open TCBs (L8) that are available to CICS, you use the SIT parameter MAXOPENTCBS. The DB2CONN parameter, TCBLIMIT specifies how many of these will be used by DB2.

7.2 CICS DB2 accounting and monitoring

To obtain the complete picture of a CICS DB2 system environment, we need to capture storage management subsystem (SMF) records from both CICS and DB2. From CICS, we need the CMF records (SMF 110) and from DB2, we need the DB2 Accounting records (SMF 101).

The information about CPU accounting in DB2 is collected by activating DB2 Accounting trace Class 1 and Class 2. Refer to 1.3.2, “DB2 accounting data (SMF 101 records)” on page 14.

Class 1 results in accounting data being accumulated by several DB2 components. The elapsed time of a DB2 thread is included in this data. Class 2 collects the elapsed and processor times spent in DB2. It is important to remember that with CICS TS V2.2 connected to DB2 V6 or later, the DB2 Class 1 time is included in the CICS CPU time and the DB2Wait field shows zero.

Figure 7-5 shows each period of processor time that is reported by CICS and DB2 when CICS is connected to DB2 Version 5 or earlier.

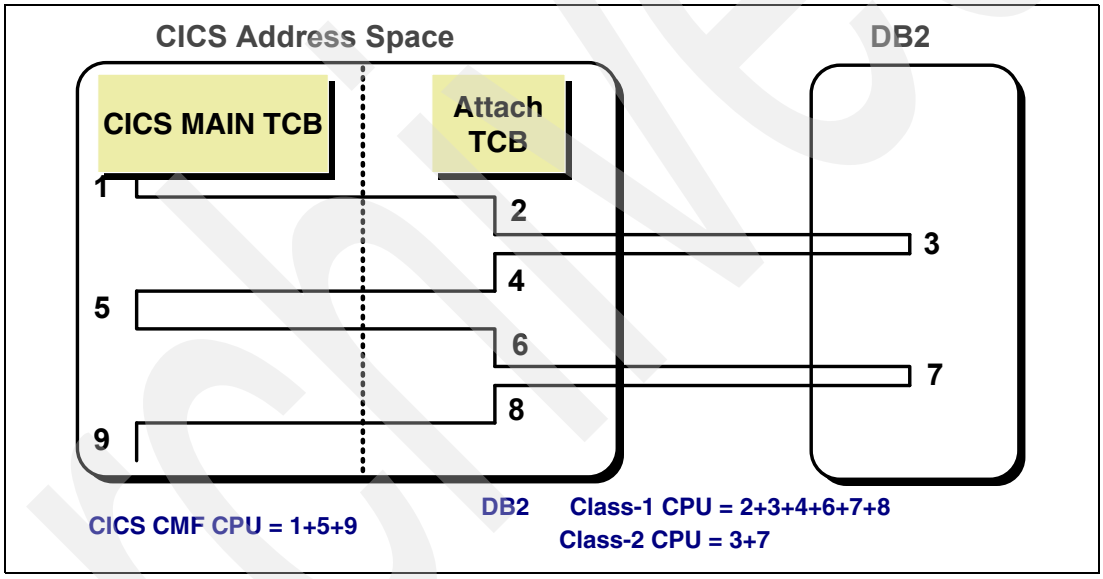

Figure 7-5 CPU accounting for DB2 Version 5 or earlier

Figure 7-7 shows each period of processor time that is reported by CICS and DB2 when CICS is connected to DB2 Version 6 or later.

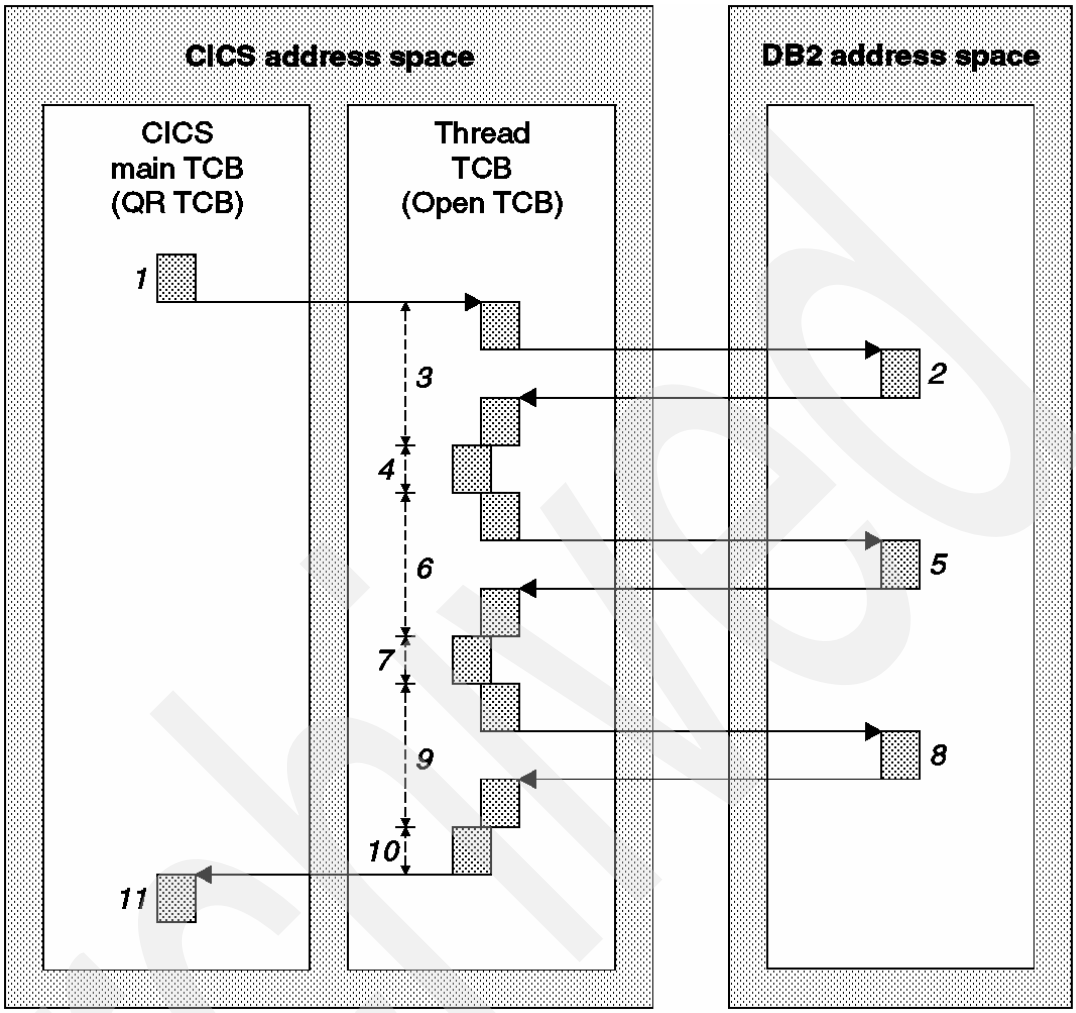

Figure 7-6 CPU accounting for DB2 Version 6 or later

Using CICS PA to analyze the CICS performance class records, you can check the elapsed time a transaction spends waiting for a DB2 request. Also, you can check the attach overhead on the CICS side. The CICS PA fields used are:

- **RMISUSP**: The total elapsed time the task was suspended by the CICS dispatcher while in the CICS RMI.
- **DISPWAIT**: The time the task waited to resume execution.
- **RMITIME**: The amount of elapsed time spent in the RMI.

Also, in the CICS performance class, you have DB2 statistics that can be very useful:

- **DB2CONWT**: The elapsed time during which the user task waited for a CICS or DB2 subtask to become available.
- **DB2RDYQW**: The elapsed time during which the user task waited for a DB2 thread to become available.
- **DB2REQCT**: The total number of DB2 EXEC SQL and Instrumentation Facility Interface (IFI) requests issued by the user task.

- **DB2WAIT**: The elapsed time during which the user task waited for DB2 to service the DB2 EXEC SQL and IFI requests issued by the user task.

7.3 CICS PA reporting CICS DB2 Attachment Facility

The CICS PA DB2 reports combine the CICS CMF performance class records (SMF 110) with the DB2 Accounting records (SMF 101) to produce a consolidated and detailed view of DB2 usage by your CICS systems. The DB2 report enables you to view CICS and DB2 resource usage statistics together in a single report.

The DB2 List report shows detailed information about DB2 activity for each transaction. The DB2 Summary reports summarize DB2 activity by transactions.

The reports can include the following DB2 information:

- DB2 Thread Identification
- Class 1 Thread elapsed and CPU times
- Class 2 In-DB2 elapsed and CPU times
- Class 3 Suspend times
- Buffer Manager statistics
- Locking statistics
- SQL DML statistics

The DB2 report matches CICS Monitoring Facility Performance records with the DB2 Accounting records by network unit of work (UOW) ID. Your CICS-DB2 resources must be defined with the DB2ENTRY attribute ACCOUNTREC(TASK) or ACCOUNTREC(UOW) for matching to occur.

CICS PA supports DB2 Accounting statistics data from DB2 Version 5, Version 6, and Version 7, although we only use DB2 Version 7 in our scenarios.

A Recap report showing processing statistics is always printed at the end.

7.4 CICS PA example reports

CICS PA provides DB2 Performance reports. These reports capture both the CMF and DB2 Accounting records. We show here several CICS PA reports which are used to demonstrate the various options available when using DB2 reports. Refer also to Figure 19-18 on page 428 and Figure 19-19 on page 429, which show using the Historical Database for DB2 reporting.

First, we needed to acquire the SMF data into CICS PA. We obtained the SMF data in data set SMFDATA.ALLRECS.G8429V00. This data set contained the data for both SMF 110 and SMF 101 records. We then used the Take-up function, by selecting option 4 (Take-up) from SMF File from the System Definition Menu. This function automatically adds any systems to CICS PA that are found within SMF records on this data set.

An example of the System Definitions screen is shown in Figure 7-7 after the take-up.

```
  File  Edit  Filter  View  Options  Help
--------------------------------------------------------------------------------
                              System Definitions                 Row 1 from 7
Command ===>                                                   Scroll ===> CSR

Select a System to edit its definition, SMF Files and Groups.
                                                                   SMF Files
/   System   Type     Image                Description              System
    SC66     Image             System added by take-up              SC66
    SCSCPJA6 CICS     SC66      System added by take-up              SCSCPJA6
    D7Q2     DB2      SC66      System added by take-up              D7Q2
    SCSCPTA2 CICS     SC66      System added by take-up              SC66
    SCSCPJA7 CICS     SC66      System added by take-up              SCSCPJA7
    SCSCPTA1 CICS     SC66      System added by take-up              SC66
    SC66LOGR Logger   SC66      System added by take-up              SC66
```

Figure 7-7 System Definitions screen

We then needed to create a report set for the DB2 reports. We requested the creation of a new Report Set DB2REPS (Figure 7-8).

```
  File  Systems  Confirm  Options  Help
--------------------------------------------------------------------------------
                                Report Sets
Command ===> new db2reps                                       Scroll ===> CSR

Report Sets Data Set  . . : CICSLS5.CICSPA.RSET

 /    Name              Description                Changed        ID
```

Figure 7-8 Creating a new report set

As shown in Figure 7-9, we selected **DB2** to create the DB2 reports.

```
  File  Systems  Confirm  Options  Help
--------------------------------------------------------------------------------
EDIT                      Report Set - DB2REPS                      Row 1 of 21
Command ===>                                                   Scroll ===> CSR

Description . . . CICS PA Report Set

Enter "/" to select action.

             ** Reports **                          Active
     +       Options                                  No
     +       Selection Criteria                       No
     -       Performance Reports                      No
                  List                                No
                  List Extended                       No
                  Summary                             No
                  Totals                              No
                  Wait Analysis                       No
                  Cross-System Work                   No
                  Transaction Group                   No
                  BTS                                 No
                  Workload Activity                   No
     +       Exception Reports                        No
     +       Transaction Resource Usage Reports       No
     -       Subsystem Reports                        No
             s    DB2                                 No
                  WebSphere MQ                        No
     +       System Reports                           No
     +       Performance Graphs                       No
     +       Extracts                                 No
             ** End of Reports **
```

Figure 7-9 Selecting DB2 for DB2 reports

As shown in Figure 7-10, we specified a CICS APPLID and a DB2 SSID, all other options we left at the default.

```
  File  Systems  Options  Help
--------------------------------------------------------------------------------
                              DB2REPS - DB2 Report
Command ===>
                                                                    More:     +
CICS System Selection:                  Report Output:
 APPLID . . SCSCPJA6  +                  DDname . . . . . . . . . DB2R0001
 Image  . . SC66      +                  Print Lines per Page . .      (1-255)
 Group  . .           +

DB2 System Selection:                   Report Options:
 SSID . . . D7Q2  +                      /  Process DB2 Accounting records
 Image  . . SC66      +                     List records with no DB2 activity
 Group  . .           +                  /  Long Summary with DB2 maximums

Reports             ----- DB2 Accounting data to include in report ------
Required:           Class1  Class2  Class3  Buffer  Locking  DML 1  DML 2
    List              /       /               /       /
    Long Summary      /       /               /       /
 /  Short Summary

Report Format:
 Title  . . CICS PA example DB2 report


Selection Criteria:
    Performance
```

Figure 7-10 Specifying the system requirements

The report produced is a short summary. When we returned to the Report Sets screen, both the Global and DB2 options were activated, this is indicated by the *Yes* in the Active column following the option. From there, we enter RUN to run the report (Figure 7-11).

```
  File  Systems  Confirm  Options  Help
--------------------------------------------------------------------------------
                                Report Sets                   Row 1 to 1 of 1
Command ===>                                                 Scroll ===> CSR

Report Sets Data Set . . : CICSLS5.CICSPA.RSET

 /    Name              Description                Changed        ID
 RUN DB2REPS  CICS PA Report Set              2003/10/19 13:16 CICSLS5
```

Figure 7-11 Submitting the DB2 report set

We could have overridden the system selection criteria that we specified earlier, as well as the date and time we wanted to start and stop reporting (Figure 7-12).

```
  File  Systems  Options  Help
-------------------------------------------------------------------------------
                            Run Report Set DB2REPS
Command ===>

Specify run Report Set options then press Enter to continue submit.

System Selection:
 CICS APPLID . . SCSCPJA6  +  Image . . SC66      +  Group . .          +
 DB2 SSID  . . . D7Q2  +      Image . . SC66      +  Group . .          +
 MQ SSID . . . .       +      Image . .           +  Group . .          +
 Logger  . . . .          +   Image . .           +  Group . .          +

 /  Override System Selections specified in Report Set

                                        ----- Report Interval ------
Missing SMF Files Option:                    MM/DD/YYYY  HH:MM:SS.TH
1  1. Issue error message               From
   2. Leave DSN unresolved in JCL       To
   3. Disregard offending reports

Enter "/" to select option
/  Edit JCL before submit
```

Figure 7-12 Run Report Set screen

Example 7-1 shows the report options that were generated from this Report Set.

Example 7-1 Report Set options generated

```
* Report Set =DB2REPS
* Description=CICS PA Report Set
* Reports for System=SCSCPJA6
*            Image =SC66
*            Description=System added by take-up
         CICSPA IN(SMFIN001),
                APPLID(SCSCPJA6),
                LINECNT(60),
                FORMAT(':','/'),
            DB2(OUTPUT(DB2RO001),
                EXTERNAL(CPAXW001),
                SSID(D7Q2),
                SHORTSUM,
                MAXLONGSUM,
                TITLE1(
 'CICS PA example DB2 report                                        '))
/*
```

The listing output from the run of these report options is shown in Figure 7-13.

```
 V1R3M0                                                CICS Performance Analyzer
                                                         DB2 - Short Summary
                                                 ____________________________________________
DB2R0001 Printed at 15:07:27 10/08/2003    Data from 14:07:41 10/07/2003 to 16:10:15 10/07/2003    APPLID SCSCPJA6     Page       1
CICS PA example DB2 report

Tran/ Program/ #Tasks/  ...........Average Elapsed Time...........  .....Average CPU Time.....  .....Average Count....... #Abends
SSID  Planname #Threads Response  Thread   In-DB2  DB2ConWt DB2ThdWt    User    Thread   In-DB2   DB2Reqs  GetPage SysPgUpd

DB2N  PROGDB2N     1433    .0115                     .0000    .0000   .002568                      17.0                        0
D7Q2  PROGDB2N     1433             .0081      N/P                              .001648      N/P              3.0       .0

DB2R  PROGDB2R     1330    .6412                     .0918    .0000   .002458                      17.0                        0
D7Q2  PROGDB2R     1330             .5400      N/P                              .001319      N/P              3.0       .0
```

Figure 7-13 Short Summary report

In the DB2 Short Summary report, for each APPLID, a data line is presented for the CMF performance class data summarized by transaction and program, and a data line is presented for the associated DB2 Accounting data summarized by the SSID and plan name.

We repeat the same exercise, but this time we are going to request the Long Summary report from the DB2 Report Set screen as shown in Figure 7-14.

```
   File  Systems  Options  Help
 ------------------------------------------------------------------------------
                                DB2REPS - DB2 Report
 Command ===>
                                                                   More:     +
 CICS System Selection:                  Report Output:
  APPLID . . SCSCPJA6  +                  DDname . . . . . . . . . DB2R0001
  Image  . . SC66      +                  Print Lines per Page . .      (1-255)
  Group  . .           +

 DB2 System Selection:                   Report Options:
  SSID . . . D7Q2  +                      /  Process DB2 Accounting records
  Image  . . SC66      +                     List records with no DB2 activity
  Group  . .           +                  /  Long Summary with DB2 maximums

 Reports             ----- DB2 Accounting data to include in report ------
 Required:           Class1  Class2  Class3  Buffer  Locking  DML 1  DML 2
     List              /       /               /       /
   /  Long Summary     /       /               /       /
     Short Summary

 Report Format:
  Title  . . CICS PA example DB2 report


Selection Criteria:
   Performance
```

Figure 7-14 Request Long Summary report

Figure 7-15 shows the report the Long Summary option provides.

```
V1R3M0                                                CICS Performance Analyzer
                                                          DB2 - Long Summary
                                                 ____________________________________________
DB2R0001 Printed at 11:11:17 10/09/2003    Data from 14:07:41 10/07/2003 to 16:10:15 10/07/2003    APPLID SCSCPJA6     Page       1
CICS PA example DB2 report

                            Avg      Max       Avg      Max       Avg      Max       Avg      Max       Avg      Max
Tran/ Program/ #Tasks/   DB2ConWt DB2ConWt  DB2ThdWt DB2ThdWt   DB2Rqst  DB2Rqst   UserCPU  UserCPU  Response Response   #Abends
SSID  Planname #Threads      Time     Time      Time     Time     Count    Count      Time     Time      Time     Time

DB2N  PROGDB2N     1433     .0000    .0000     .0000    .0000      17.0       17   .002568  .007760     .0115    .3789         0

D7Q2  PROGDB2N     1433  Thread Utilization       Entry=    1433  Pool=       0  Command=       0
                         Class1: Thread Time      Avg: Elapsed=   .0081  CPU= .001648
                                                  Max: Elapsed=   .3704  CPU= .002559
                         Class2: In-DB2 Time      Avg: Elapsed=     N/P  CPU=     N/P
                                                  Max: Elapsed=     N/P  CPU=     N/P
                         Buffer Manager Summary   Avg: GtPgRq=     3.0  SyPgUp=      .0
                                                  Max: GtPgRq=       3  SyPgUp=       0
                         Locking Summary          Avg: Suspnd=      .0  DeadLk=      .0  TmeOut=      .0  MxPgLk=     1.0
                                                  Max: Suspnd=       0  DeadLk=       0  TmeOut=       0  MxPgLk=       1
```

Figure 7-15 Long Summary report

A DB2 report list was then produced. To produce a report list, we needed to choose the **List** option from the DB2 Report screen as shown in Figure 7-16.

```
 File  Systems  Options  Help
 ---------------------------------------------------------------------------
                                DB2REPS - DB2 Report
 Command ===>
                                                                   More:     +
 CICS System Selection:                  Report Output:
  APPLID . . SCSCPJA6  +                  DDname . . . . . . . . . DB2R0001
  Image  . . SC66      +                  Print Lines per Page . .      (1-255)
  Group  . .           +

 DB2 System Selection:                   Report Options:
  SSID . . . D7Q2  +                      /  Process DB2 Accounting records
  Image  . . SC66      +                     List records with no DB2 activity
  Group  . .           +                  /  Long Summary with DB2 maximums

 Reports              ----- DB2 Accounting data to include in report ------
 Required:            Class1  Class2  Class3  Buffer  Locking  DML 1  DML 2
  /  List               /       /               /       /
     Long Summary       /       /               /       /
     Short Summary

 Report Format:
  Title  . . CICS PA example DB2 report


 Selection Criteria:
     Performance
```

Figure 7-16 Requesting the List report

The DB2 List report provided a detailed list of all network UOWs with DB2 activity. This report consolidates CICS CMF performance class records and DB2 accounting statistics from a single or multiple CICS systems. Figure 7-17 shows an example of this report.

```
 V1R3M0                                                CICS Performance Analyzer
                                                              DB2 - List
                                                 ____________________________________________
DB2R0001 Printed at 16:10:01 10/09/2003    Data from 14:07:41 10/07/2003 to 16:10:15 10/07/2003                    Page       1
CICS PA example DB2 report

Tran/ Userid/ Program/                 UOW R               ..DB2 Wait Time..   DB2    User CPU                           Response A
SSID  Authid  Planname  APPLID    Task Seq T Term  LUName   Connect  Thread   ReqCnt    Time     Start Time    Stop Time    Time   B

DB2N CICSUSER PROGDB2N SCSCPJA6    234   1 T <AY1 SCSCPTA2    .0000    .0000       17    .0023  15:37:40.165 15:37:40.176    .0105

D7Q2 CICSUSER PROGDB2N SCSCPJA6    234  Thread Identification   ID=ENTRDB2N0003  NETName=USIBMSC.SCSTP002   UOWID=57FB359D00ED
                                                                 Begin Time: 15:37:40.173 10/07/02  End Time: 15:37:40.175 10/07/02
                                        Class1: Thread Time      Elapsed=   .0022  CPU= .001444
                                        Class2: In-DB2 Time      Elapsed=     N/P  CPU=     N/P
                                        Buffer Manager Summary   GtPgRq=       3  SyPgUp=       0
                                        Locking Summary          Suspnd=       0  DeadLk=       0  TmeOut=       0  MxPgLk=       1
```

Figure 7-17 List report

In the DB2 List report, a data line is presented for each CMF performance class record, and a block of data lines is presented for each associated DB2 Accounting record. Records that are part of the same network UOW are sequentially in groups separated by blank lines. A network UOW will only be presented if it involved some DB2 activity.

A Recap report showing processing statistics is always printed at the end (Figure 7-18). The recap statistics that are shown can be useful in seeing where the records that were processed came from.

```
 V1R3M0                                                CICS Performance Analyzer
                                                              DB2 - Recap
                                                 ____________________________________________
DB2R0001 Printed at 17:58:10 10/10/2003    Data from 15:55:27 10/10/2003 to 16:02:06 10/10/2003                    Page       1
CICS PA CICS TS V2.2 and DB2 V7.1


Records processed by the DB2 report processor:
                                                                  Count     % of Total
  CMF performance class records:                                ---------   ----------
    Included  . . . . . . . . . . . . . . . . . . . . .            49        .1%
    Excluded:
      CICS PA record selection  . . . . . . . . . . .           80,829      99.9%
      No DB2 activity . . . . . . . . . . . . . . . .                0        .0%
      Other . . . . . . . . . . . . . . . . . . . . .                0        .0%
    Total . . . . . . . . . . . . . . . . . . . . . .           80,878

  DB2 accounting records:
    Included  . . . . . . . . . . . . . . . . . . . .            3,371      97.4%
    Excluded:
      CICS PA record selection  . . . . . . . . . . .                0        .0%
      Not CICS Attach . . . . . . . . . . . . . . . .               89       2.6%
      Accounting Token not set  . . . . . . . . . . .                0        .0%
      Other . . . . . . . . . . . . . . . . . . . . .                0        .0%
    Total . . . . . . . . . . . . . . . . . . . . . .            3,460


Network units-of-work with DB2 activity:
                                                                  Count     % of Total
  Network units-of-work where:                                  ---------   ----------
    DB2 accounting records were resolved  . . . . . .               49      100.0%
    DB2 accounting records were not resolved  . . . .                0        .0%
    DB2 accounting records were not present . . . . .                0        .0%
    Total . . . . . . . . . . . . . . . . . . . . . .               49

  CMF performance class records with DB2 activity:
    Matched to a DB2 accounting record  . . . . . . .               49      100.0%
    Not matched to any DB2 accounting records . . . .                0        .0%
    Total . . . . . . . . . . . . . . . . . . . . . .               49

  CMF performance class records with no DB2 activity:
    Total . . . . . . . . . . . . . . . . . . . . . .              N/A

  DB2 accounting records:
    Eligible for summary reporting  . . . . . . . . .               49      100.0%
    Matched to a single CICS task   . . . . . . . . .               49      100.0%
    Matched to two or more CICS tasks . . . . . . . .                0        .0%
    Not matched to any CICS tasks . . . . . . . . . .                0        .0%
    Total . . . . . . . . . . . . . . . . . . . . . .               49
```

Figure 7-18 Recap report

If the DB2 Accounting records have a large number of excluded records, then it is a good indication that the DB2ENTRY definitions do not have ACCOUNTREC(TASK) or (UOW) set.

7.5 CICS TS V1.3 and DB2 V7 scenario

This scenario shows how you can use CICS PA to produce several DB2 reports from SMF data for CICS TS V1.3 and DB2 V7.1 systems.

DB2N transaction performs the same 15 fetches from the DSN8710.EMP table, but between each fetch there is a non-threadsafe EXEC CICS command. In this scenario, we use the reports CICS PA generates to monitor the number of times the transaction DB2N overflows to the POOL.

The workload was generated using Teleprocessing Network Simulator (TPNS). We used TPNS to simulate a realistic 3270 workload environment. The SIT parameter, TCBLIMIT is 12 and the DB2ENTRY parameter, THREADLIMIT for DB2N is 10.

To start, we added the CICS TS V1.3 CICS system. We already added the DB2 system using the Take-up command in the example reports chapter. The name of this CICS system is SCSCPAA1. To add the new system we had a number of ways of doing this. In this case, we went to the System Definitions menu and enter `I` (insert) to add a new line (Figure 7-19).

```
  File  Edit  Filter  View  Options  Help
--------------------------------------------------------------------------------
                              System Definitions                 Row 1 from 7
Command ===>                                                   Scroll ===> CSR

Select a System to edit its definition, SMF Files and Groups.
                                                                   SMF Files
/   System   Type     Image                Description             System
    SC66     Image             System added by take-up             SC66
    SCSCPJA6 CICS     SC66      System added by take-up             SCSCPJA6
i   D7Q2     DB2      SC66      System added by take-up             D7Q2
    SCSCPTA2 CICS     SC66      System added by take-up             SC66
    SCSCPJA7 CICS     SC66      System added by take-up             SCSCPJA7
    SCSCPTA1 CICS     SC66      System added by take-up             SC66
    SC66LOGR Logger   SC66      System added by take-up             SC66
```

Figure 7-19 Inserting a new system

We were then presented with a pop-up screen to add the new system; we entered the CICS system name and then a `1` to indicate that it is a CICS system. The next screen was then displayed. Here we added the SMF data set we wanted to use to obtain the performance records (Figure 7-20).

```
---------------------------- System Definitions -----------------------------
   File  Edit  Dictionary  View  Options  Help
 ---------------------------------------------------------------------------
                              CICS System              Row 1 of 3 More: >
 Command ===>                                          Scroll ===> CSR

 CICS System definition:
  APPLID . . . . . . . . SCSCPAA1  MVS Image . .
  Description  . . . . . CICS TS V1.3
  CICS Version (VRM) . .
  MCT Suffix . . . . . .
  MCT Load Library . . .
  SDFHLOAD Library . . .
  Dictionary DSN . . . .

 / Exc             SMF Data Set Name +                UNIT +  SEQ VOLSER +
       'SMFDATA.ALLRECS.G8484V00'
       'SMFDATA.ALLRECS.G8485V00'
       'SMFDATA.ALLRECS.G8486V00'
 ********************************** End of list ****************************
```

Figure 7-20 Adding SMF data sets

We then changed the DB2 system definition, to change the SMF data sets it used. To do this, we selected **D7Q2** from the Systems Definitions menu and then added the same SMF data sets that we had added for the CICS system.

We then used the Report Set DB2REPS that we set up earlier.

For this scenario, we put the CICS system and the DB2 system into a group. For this, we selected option `3` on the Systems Definition menu. We set up a new group by specifying `new DB2GROUP`, we then needed to add the systems we were interested in obtaining performance records for. Figure 7-21 shows the group that contains our CICS system and our DB2 system.

```
---------------------------- System Definitions ----------------------------
   File  Edit  Options  Help
 ---------------------------------------------------------------------------
                           Systems in this Group            Row 1 to 2 of 2
 Command ===>                                             Scroll ===> CSR

 Group . . . . . . DB2GROUP
 Description . . .

 /  System +  Type     Image                 Description
    SCSCPAA1  CICS              CICS TS V1.3
    D7Q2      DB2      SC66     System added by take-up
 ********************************* End of list ****************************
```

Figure 7-21 Adding systems to a group

We then went to the Report Set DB2REPS and added the group (Figure 7-22).

```
    File  Filter  Edit  Systems  Options  Help
 ------------------------------------------------------------------------------
                             DB2REPS - DB2 Reports                Row 1 from 1
 Command ===>                                                Scroll ===> CSR

 Select to edit report options.

         ---- System Selection -----             Selection
 /  Exc  APPLID +  Image +  Group +   Output     Criteria
                            DB2GROUP  DB2R0001     NO
 ******************************** End of list ********************************
```

Figure 7-22 Using groups

The first report we wanted to run is the short summary as shown in Figure 7-23.

```
  File  Systems  Options  Help
--------------------------------------------------------------------------------
                             DB2REPS - DB2 Report
Command ===>
                                                                   More:     +
CICS System Selection:                  Report Output:
 APPLID . .           +                  DDname . . . . . . . . . DB2R0001
 Image  . .           +                  Print Lines per Page . .      (1-255)
 Group  . . DB2GROUP  +

DB2 System Selection:                   Report Options:
 SSID . . .       +                      /  Process DB2 Accounting records
 Image  . .           +                     List records with no DB2 activity
 Group  . .           +                  /  Long Summary with DB2 maximums

Reports             ----- DB2 Accounting data to include in report ------
Required:           Class1  Class2  Class3  Buffer  Locking  DML 1  DML 2
    List              /       /               /       /
    Long Summary      /       /               /       /
 /  Short Summary

Report Format:
 Title  . . CICS PA example DB2 report


Selection Criteria:
    Performance
```

Figure 7-23 Request Short Summary report

We were then ready to RUN the Report Set. You can do this in several places. Here we entered the RUN command from the Report Set as shown in Figure 7-24.

```
  File  Systems  Confirm  Options  Help
--------------------------------------------------------------------------------
EDIT                      Report Set - DB2REPS                     Row 1 of 20
Command ===> RUN                                              Scroll ===> CSR

Description . . . CICS PA Report Set

Enter "/" to select action.

            ** Reports **                            Active
     -      Options                                    Yes
                 Global                                 Yes
     +      Selection Criteria                         No
     -      Performance Reports                        No
                 List                                   No
                 List Extended                          No
                 Summary                                No
                 Totals                                 No
                 Wait Analysis                          No
                 Cross-System Work                      No
                 Transaction Group                      No
                 BTS                                    No
                 Workload Activity                      No
     +      Exception Reports                          No
     +      Transaction Resource Usage Reports         No
     -      Subsystem Reports                          Yes
                 DB2                                    Yes
                 WebSphere MQ                           No
     +      System Reports                             No
     +      Performance Graphs                         No
     +      Extracts                                   No
            ** End of Reports **
```

Figure 7-24 Submitting the report set

We then received another screen which allowed the changing of various options, such as the systems we wish to collect performance data from, the option to edit the JCL that will be submitted or specify a date and time we want to collect the performance data. What we requested is shown in Figure 7-25.

```
  File  Systems  Options  Help
--------------------------------------------------------------------------------
                              Run Report Set DB2REPS
Command ===>

Specify run Report Set options then press Enter to continue submit.

System Selection:
 CICS APPLID . .           +  Image . .           +  Group . .           +
 DB2 SSID  . . .       +      Image . .           +  Group . .           +
 MQ SSID . . . .       +      Image . .           +  Group . .           +
 Logger  . . . .           +  Image . .           +  Group . .           +

 /  Override System Selections specified in Report Set

                                          ----- Report Interval ------
Missing SMF Files Option:                      MM/DD/YYYY  HH:MM:SS.TH
1  1. Issue error message                 From 10/14/2003  10:44:00.00
   2. Leave DSN unresolved in JCL         To   10/14/2003  10:49:00.00
   3. Disregard offending reports

Enter "/" to select option
/  Edit JCL before submit
```

Figure 7-25 Selecting records by date and time

We then looked at the output, shown in Figure 7-26, from the Report Set.

```
 V1R3M0                                          CICS Performance Analyzer
                                                    DB2 - Short Summary
                                   ____________________________________________
DB2R0001 Printed at 10:58:24 10/14/2003    Data from 10:43:59 10/14/2003 to 10:48:59 10/14/2003    APPLID SCSCPAA1     Page       1
CICS PA CICS TS V1.3 and DB2 V7.1

Tran/ Program/ #Tasks/  ............Average Elapsed Time............  .....Average CPU Time.....  .....Average Count....... #Abends
SSID  Planname #Threads Response  Thread   In-DB2  DB2ConWt DB2ThdWt    User    Thread   In-DB2   DB2Reqs  GetPage SysPgUpd

DB2N  PROGDB2N    51545    .0581                     .0040    .0000   .001007                       17.0                        0
D7Q2  PROGDB2N    51545             .0107    .0011                                .000991  .000800               3.0       .0
```

Figure 7-26 Short Summary report of the DB2N transaction

Here, we had an average response time of .0581 and the CICS PA field DB2ConWt of .0040. The DB2ConWt field indicates the DB2 Connection Wait time, the wait for a DB2 subtask to become available. We then ran the DB2 Report Set with the Long Summary option. We also requested DB2 Accounting data to be included in the report. The data we requested is the Class 1, Class 2, Buffer and Locking, as shown in Figure 7-27.

```
  File  Systems  Options  Help
 ------------------------------------------------------------------------------
                              DB2REPS - DB2 Report
 Command ===>
                                                                   More:     +
 CICS System Selection:                  Report Output:
  APPLID . .          +                   DDname . . . . . . . . . DB2R0001
  Image  . .          +                   Print Lines per Page . .      (1-255)
  Group  . . DB2GROUP  +

 DB2 System Selection:                   Report Options:
  SSID . . .       +                     /  Process DB2 Accounting records
  Image  . .          +                     List records with no DB2 activity
  Group  . .          +                  /  Long Summary with DB2 maximums

 Reports             ----- DB2 Accounting data to include in report ------
 Required:           Class1  Class2  Class3  Buffer  Locking  DML 1  DML 2
     List              /       /               /       /
  /  Long Summary      /       /               /       /
     Short Summary

 Report Format:
  Title  . . CICS PA CICS TS V1.3 and DB2 V7.1


Selection Criteria:
   Performance
```

Figure 7-27 Request Long Summary report

We then looked at the Long Summary report listing, as shown in Figure 7-28. We overflowed to the pool 2089 times.

```
 V1R3M0                                          CICS Performance Analyzer
                                                    DB2 - Long Summary
                                        ____________________________________________
DB2R0001 Printed at 12:00:07 10/14/2003    Data from 10:43:59 10/14/2003 to 10:48:59 10/14/2003    APPLID SCSCPAA1     Page       1
CICS PA CICS TS V1.3 and DB2 V7.1

                            Avg      Max      Avg      Max      Avg      Max      Avg      Max      Avg      Max
Tran/ Program/ #Tasks/   DB2ConWt DB2ConWt DB2ThdWt DB2ThdWt  DB2Rqst  DB2Rqst  UserCPU  UserCPU Response Response   #Abends
SSID  Planname #Threads     Time     Time     Time     Time    Count    Count     Time     Time     Time     Time

DB2N  PROGDB2N    51545    .0040    .1771    .0000    .0000     17.0       17  .001007  .001552    .0581   1.2871         0

D7Q2  PROGDB2N    51545  Thread Utilization       Entry=   49456  Pool=    2089  Command=       0
                         Class1: Thread Time      Avg: Elapsed=   .0107  CPU= .000991
                                                  Max: Elapsed=  1.2759  CPU= .002685
                         Class2: In-DB2 Time      Avg: Elapsed=   .0011  CPU= .000800
                                                  Max: Elapsed=   .5341  CPU= .002499
                         Buffer Manager Summary   Avg: GtPgRq=     3.0  SyPgUp=      .0
                                                  Max: GtPgRq=       3  SyPgUp=       0
                         Locking Summary          Avg: Suspnd=      .0  DeadLk=      .0  TmeOut=      .0  MxPgLk=     1.0
                                                  Max: Suspnd=       1  DeadLk=       0  TmeOut=       0  MxPgLk=       1
```

Figure 7-28 Long Summary report of DB2N transaction

In conclusion, we could deduce from the CICS PA long summary report that we should think about increasing the THREADLIMIT parameter for the DB2ENTRY for DB2N, in an effort to reduce the number of pool overflows.

7.6 CICS TS V2.2 and DB2 V7 scenario

The goal of this scenario is to show the difference in system resources used by a non-threadsafe and a threadsafe application running in CICS TS V2.2 and connected to DB2 V7.1. The CICS PA is used to produce reports using the various options available to the DB2 Report Set.

To show the difference in a threadsafe and a non-threadsafe environment, we use two simple transactions.

- The DB2R transaction which performs 15 fetches from DSN8710.EMP, the sample employee table supplied with DB2 V7.1. This application is threadsafe and was defined as such, with the program attribute, CONCURRENCY(THREADSAFE).
- The DB2N performs the same 15 fetches from DSN8710.EMP, but between each fetch there is a non-threadsafe EXEC CICS command. This application is non-threadsafe and was defined with the program attribute, CONCURRENCY(QUASIRENT).

The workload was generated using Teleprocessing Network Simulator (TPNS). We used TPNS to simulate a realistic 3270 workload environment. Two separate runs were carried out, one with just DB2R transactions running, and one with just DB2N transactions running.

Running the non-threadsafe scenario

The SIT parameter MAXOPENTCBS value was 15, the DB2CONN TCBLIMIT parameter value was 12 and the DB2ENTRY attribute, THREADLIMIT for DB2N was 10.

For this scenario, we set up another CICS PA group selecting option 3 from the System Definitions Menu. On the Group screen, we requested a new group called *db2grp* as shown in Figure 7-29.

```
  File  Edit  Filter  View  Options  Help
--------------------------------------------------------------------------------
                                  Groups                        Row 1 from 1
Command ===> new db2grp                                       Scroll ===> CSR

Select to review the Systems in the Group.

/   Use  Group                 Description
      2  DB2GROUP
********************************* End of list *********************************
```

Figure 7-29 Groups

After the new group was created, we added the systems that we were interested in. Here we were interested in SCSCPJA6, a CICS TS V2.2 system, and D7Q2, a DB2 V7.1 system. The screen shown in Figure 7-30 shows the two systems added to our new group.

```
---------------------------- System Definitions ----------------------------
   File  Edit  Options  Help
 ---------------------------------------------------------------------------
                           Systems in this Group            Row 1 to 2 of 2
 Command ===>                                             Scroll ===> CSR

 Group . . . . . . DB2GRP
 Description . . .

 /  System +  Type     Image                 Description
    SCSCPJA6  CICS     SC66     System added by take-up
    D7Q2      DB2      SC66     System added by take-up
 ********************************** End of list ***************************
```

Figure 7-30 Systems added to group

To select the transactions we wanted, DB2N and DB2R, we used an Object List. We needed to create one first. We did this by accessing option of the main screen. We then specified `new DB2TRAN` on the Objects Lists screen. The screen in Figure 7-31 was then displayed.

```
    File  Edit  Confirm  Options  Help
 ---------------------------------------------------------------------------
                          EDIT Object List - DB2TRAN            Row 1 to 1 of 1
 Command ===>                                                 Scroll ===> CSR

 Description  . . . . CICS PA Object List

 Specify the Object List values:

 /   1st Value   2nd Value   Sublist
     DB2*
 ******************************** End of list *********************************
```

Figure 7-31 Object List

On this screen, we entered a value of DB2*. We could use the Object List as the selection criteria for a Report Set. First we ran a short summary report as shown in Figure 7-32. We also selected the **Performance** selection criteria.

```
File  Systems  Options  Help
 ------------------------------------------------------------------------------
                              DB2REPS - DB2 Report
 Command ===>
                                                                   More:     +
 CICS System Selection:                  Report Output:
  APPLID . .          +                   DDname . . . . . . . . . DB2R0001
  Image  . .          +                   Print Lines per Page . .      (1-255)
  Group  . . DB2GRP   +

 DB2 System Selection:                   Report Options:
  SSID . . .      +                       /  Process DB2 Accounting records
  Image  . .          +                      List records with no DB2 activity
  Group  . .          +                   /  Long Summary with DB2 maximums

 Reports             ----- DB2 Accounting data to include in report ------
 Required:           Class1  Class2  Class3  Buffer  Locking  DML 1  DML 2
     List              /       /               /       /
     Long Summary      /       /               /       /
  /  Short Summary

 Report Format:
  Title  . . CICS PA CICS TS V1.3 and DB2 V7.1


 Selection Criteria:
  s  Performance
```

Figure 7-32 Request Short Summary report

On the Performance Selection Statement screen (Figure 7-33), we specified an Object List of DB2TRAN.

```
File  Edit  Object Lists  Options  Help
 ------------------------------------------------------------------------------
                    DB2REPS - Performance Select Statement  Row 1 of 9 More: >
 Command ===>                                                Scroll ===> CSR

          Active  --------------- Report Interval ----------------
    Inc   Start   -------- From ---------  --------- To ----------
    Exc   Stop    MM/DD/YYYY  HH:MM:SS.TH  MM/DD/YYYY  HH:MM:SS.TH


 ------------------------------------------------------------------------------

    Inc  Field             --- Value or Range ---   Object
 /  Exc  Name +    Type    Value/From   To          List +
    INC  TRAN                                       DB2TRAN
```

Figure 7-33 Performance Select Statement screen

We then submitted the Report Set. Part of the listing of the short summary is shown in Figure 7-34. From this report, we could see that the average response time for the DB2N transaction was .0410, and that we had an average wait for an open TCB to become available

of .0020. This indicates that may be we should increase the value of the DB2CONN parameter, TCBLIMIT.

```
 V1R3M0                                                  CICS Performance Analyzer
                                                            DB2 - Short Summary
                                                 ____________________________________________
DB2R0001 Printed at 10:17:42 10/11/2003    Data from 09:08:01 10/11/2003 to 09:09:59 10/11/2003    APPLID SCSCPJA6     Page       1
CICS PA CICS TS V2.2 and DB2 V7.1

Tran/ Program/ #Tasks/  ............Average Elapsed Time............  .....Average CPU Time.....  .....Average Count....... #Abends
SSID  Planname #Threads Response  Thread   In-DB2  DB2ConWt DB2ThdWt    User    Thread   In-DB2   DB2Reqs  GetPage SysPgUpd

DB2N  PROGDB2N    11178    .0410                     .0020    .0000   .002269                      17.0                        0
D7Q2  PROGDB2N    11165             .0255    .0021                                .001457  .000804              3.0       .0
```

Figure 7-34 Short Summary report of DB2N transaction

We then created a Long Summary report (Figure 7-35) to provide more details about the DB2N transaction. From the Long Summary report, we could see the maximum time our transaction waited to obtain an open TCB. We could also see that we had overflowed into the pool 953 times, showing that we should think about increasing the THREADLIMIT value for the DB2N transaction, if this overflowing to the pool is not expected.

```
 V1R3M0                                                  CICS Performance Analyzer
                                                            DB2 - Long Summary
                                                 ____________________________________________
DB2R0001 Printed at 11:42:22 10/11/2003    Data from 09:08:01 10/11/2003 to 09:09:59 10/11/2003    APPLID SCSCPJA6     Page       1
CICS PA CICS TS V2.2 and DB2 V7.1

                              Avg      Max       Avg      Max       Avg      Max       Avg      Max       Avg      Max
Tran/ Program/ #Tasks/   DB2ConWt DB2ConWt  DB2ThdWt DB2ThdWt   DB2Rqst  DB2Rqst   UserCPU  UserCPU  Response Response   #Abends
SSID  Planname #Threads      Time     Time      Time     Time     Count    Count      Time     Time      Time     Time

DB2N  PROGDB2N    11178     .0020    .2020     .0000    .0000      17.0       17   .002269  .004864     .0410    .3034         0

D7Q2  PROGDB2N    11165  Thread Utilization       Entry=   10212  Pool=     953  Command=       0
                         Class1: Thread Time      Avg: Elapsed=   .0255  CPU= .001457
                                                  Max: Elapsed=   .2294  CPU= .002361
                         Class2: In-DB2 Time      Avg: Elapsed=   .0021  CPU= .000804
                                                  Max: Elapsed=   .1113  CPU= .001617
                         Buffer Manager Summary   Avg: GtPgRq=     3.0  SyPgUp=      .0
                                                  Max: GtPgRq=       3  SyPgUp=       0
                         Locking Summary          Avg: Suspnd=      .1  DeadLk=      .0  TmeOut=      .0  MxPgLk=     1.0
                                                  Max: Suspnd=       1  DeadLk=       0  TmeOut=       0  MxPgLk=       1
```

Figure 7-35 Long Summary report of DB2N transaction

The DB2 Accounting record Class1: Thread Time is now included in the CICS CPU time. Therefore, the CICS PA field, UserCPU time will be greater than or equal to the Class 1 time.

Finally, we produced a DB2 List report. The List report shows a detailed list of all network UOWs with DB2 activity (Figure 7-36).

```
 V1R3M0                                                CICS Performance Analyzer
                                                              DB2 - List
                                                 ____________________________________________
DB2R0001 Printed at 12:11:04 10/11/2003    Data from 09:08:01 10/11/2003 to 09:09:59 10/11/2003                        Page       1
CICS PA CICS TS V2.2 and DB2 V7.1

Tran/ Userid/ Program/                UOW R               ..DB2 Wait Time..   DB2    User CPU                                Response A
SSID  Authid  Planname  APPLID    Task Seq T Term  LUName   Connect  Thread   ReqCnt    Time     Start Time    Stop Time    Time   B

DB2N CICSUSER PROGDB2N SCSCPJA6  63747   1 T <AY4 SCSCPTA2    .0000    .0000       17    .0024   9:08:02.154  9:08:02.244    .0900

D7Q2 CICSUSER PROGDB2N SCSCPJA6  63747  Thread Identification   ID=ENTRDB2N0009  NETName=USIBMSC.SCSTP000   UOWID=5CAB94729676
                                                                Begin Time:  9:08:02.158 10/11/02  End Time:  9:08:02.243 10/11/02
                                        Class1: Thread Time     Elapsed=   .0845  CPU= .001541
                                        Class2: In-DB2 Time     Elapsed=   .0105  CPU= .000892
                                        Buffer Manager Summary  GtPgRq=       3  SyPgUp=       0
                                        Locking Summary         Suspnd=       1  DeadLk=       0  TmeOut=       0  MxPgLk=       1

DB2N CICSUSER PROGDB2N SCSCPJA6  63867   1 T <AY3 SCSCPTA2    .0000    .0000       17    .0022   9:08:03.145  9:08:03.165    .0199

D7Q2 CICSUSER PROGDB2N SCSCPJA6  63867  Thread Identification   ID=ENTRDB2N0012  NETName=USIBMSC.SCSTP000   UOWID=5CAB95649CE6
Begin Time:  9:08:03.146 10/11/02  End Time:  9:08:03.164 10/11/02
                                        Class1: Thread Time     Elapsed=   .0185  CPU= .001447
                                        Class2: In-DB2 Time     Elapsed=   .0009  CPU= .000775
                                        Buffer Manager Summary  GtPgRq=       3  SyPgUp=       0
                                        Locking Summary         Suspnd=       0  DeadLk=       0  TmeOut=       0  MxPgLk=       1

DB2N CICSUSER PROGDB2N SCSCPJA6  63973   1 T <AY4 SCSCPTA2    .0000    .0000       17    .0022   9:08:03.997  9:08:04.015    .0186

D7Q2 CICSUSER PROGDB2N SCSCPJA6  63973  Thread Identification   ID=ENTRDB2N0012  NETName=USIBMSC.SCSTP000   UOWID=5CAB9634A394
                                                                Begin Time:  9:08:03.998 10/11/02  End Time:  9:08:04.014 10/11/02
                                        Class1: Thread Time     Elapsed=   .0160  CPU= .001432
                                        Class2: In-DB2 Time     Elapsed=   .0009  CPU= .000782
                                        Buffer Manager Summary  GtPgRq=       3  SyPgUp=       0
                                        Locking Summary         Suspnd=       0  DeadLk=       0  TmeOut=       0  MxPgLk=       1
```

Figure 7-36 List report of the DB2N transaction

We changed the SIT parameter, MAXOPENTCBS to 20, the DB2CONN parameter, TCBLIMIT to 20 and the DB2ENTRY attribute, THREADLIMIT for DB2N to 20. We ran the tests again and collected the SMF records. We used the Long Summary report to display the results of this new test (Figure 7-37).

```
 V1R3M0                                                CICS Performance Analyzer
                                                            DB2 - Long Summary
                                                 ____________________________________________
DB2R0001 Printed at 13:29:57 10/11/2003    Data from 12:25:59 10/11/2003 to 12:28:43 10/11/2003    APPLID SCSCPJA6     Page       1
CICS PA CICS TS V2.2 and DB2 V7.1

                              Avg      Max       Avg      Max       Avg      Max       Avg      Max       Avg      Max
Tran/ Program/ #Tasks/   DB2ConWt DB2ConWt  DB2ThdWt DB2ThdWt   DB2Rqst  DB2Rqst   UserCPU  UserCPU  Response Response   #Abends
SSID  Planname #Threads      Time     Time      Time     Time     Count    Count      Time     Time      Time     Time

DB2N  PROGDB2N    15436     .0000    .0000     .0000    .0000      17.0       17   .002276  .006128     .0410    .7160         0

D7Q2  PROGDB2N    15436  Thread Utilization       Entry=   15436  Pool=       0  Command=       0
                         Class1: Thread Time      Avg: Elapsed=   .0297  CPU= .001458
                                                  Max: Elapsed=   .6947  CPU= .002273
                         Class2: In-DB2 Time      Avg: Elapsed=   .0028  CPU= .000807
                                                  Max: Elapsed=   .1031  CPU= .001649
                         Buffer Manager Summary   Avg: GtPgRq=     3.0  SyPgUp=      .0
                                                  Max: GtPgRq=       3  SyPgUp=       0
                         Locking Summary          Avg: Suspnd=      .1  DeadLk=      .0  TmeOut=      .0  MxPgLk=     1.0
                                                  Max: Suspnd=       1  DeadLk=       0  TmeOut=       0  MxPgLk=       1
```

Figure 7-37 Long Summary report of the DB2N transaction

From this report, we could see that we had reduced the DB2ConWt to 0 and the number of overflows to the pool to 0.

Running the threadsafe scenario

We then ran the DB2R transaction with the same system setup. The SIT parameter, MAXOPENTCBS parameter was 15, the DB2CONN parameter, TCBLIMIT was 12 and the DB2ENTRY attribute, THREADLIMIT for DB2R was 10.

The Short Summary report is shown in Figure 7-38.

```
 V1R3M0                                                CICS Performance Analyzer
                                                          DB2 - Short Summary
                                              ____________________________________________
DB2R0001 Printed at 13:59:48 10/11/2003    Data from 13:40:59 10/11/2003 to 13:43:33 10/11/2003    APPLID SCSCPJA6     Page       1
CICS PA CICS TS V2.2 and DB2 V7.1

Tran/ Program/ #Tasks/  ...........Average Elapsed Time...........  .....Average CPU Time.....  .....Average Count....... #Abends
SSID  Planname #Threads Response  Thread   In-DB2  DB2ConWt DB2ThdWt    User    Thread   In-DB2   DB2Reqs  GetPage SysPgUpd

DB2R  PROGDB2R    14346    .0150                      .0001    .0000   .001958                      17.0                      0
D7Q2  PROGDB2R    14346             .0066    .0023                                .001096  .000691              3.0       .0
```

Figure 7-38 Short Summary report of the DB2R transaction

Looking at this report, we could see that the average response time is .0150. Even though we used the same number of open TCBs, we had a much smaller value for the CICS PA field, DB2ConWt. We then looked at the Long Summary report as shown in Figure 7-39.

```
 V1R3M0                                                CICS Performance Analyzer
                                                          DB2 - Long Summary
                                              ____________________________________________
DB2R0001 Printed at 14:08:55 10/11/2003    Data from 13:40:59 10/11/2003 to 13:43:33 10/11/2003    APPLID SCSCPJA6     Page       1
CICS PA CICS TS V2.2 and DB2 V7.1

                                Avg      Max       Avg      Max       Avg      Max       Avg      Max       Avg      Max
Tran/ Program/ #Tasks/   DB2ConWt DB2ConWt  DB2ThdWt DB2ThdWt   DB2Rqst  DB2Rqst   UserCPU  UserCPU  Response Response   #Abends
SSID  Planname #Threads      Time     Time      Time     Time     Count    Count      Time     Time      Time     Time

DB2R  PROGDB2R    14346     .0001    .0295     .0000    .0000      17.0       17   .001958  .005792     .0150    .2570         0

D7Q2  PROGDB2R    14346  Thread Utilization       Entry=   14309  Pool=      37  Command=       0
                         Class1: Thread Time      Avg: Elapsed=   .0066  CPU= .001096
                                                  Max: Elapsed=   .2064  CPU= .004563
                         Class2: In-DB2 Time      Avg: Elapsed=   .0023  CPU= .000691
                                                  Max: Elapsed=   .1983  CPU= .004140
                         Buffer Manager Summary   Avg: GtPgRq=     3.0  SyPgUp=      .0
                                                  Max: GtPgRq=       3  SyPgUp=       0
                         Locking Summary          Avg: Suspnd=      .0  DeadLk=      .0  TmeOut=      .0  MxPgLk=     1.0
                                                  Max: Suspnd=       1  DeadLk=       0  TmeOut=       0  MxPgLk=       1
```

Figure 7-39 Long Summary report of DB2R transaction

The number of transactions that overflowed to the pool were reduced without the need to change any other parameters.

In conclusion, we could see the improvement in CICS DB2 performance and system resources when running in a threadsafe environment quickly with the use of the CICS PA DB2 reports.

7.7 Extracting CICS DB2 records

To extract CICS DB2 performance records, we need to define a Report Form. We selected option 3 on the Primary Options Menu, and then arrived at the Report Forms screen. As shown in Figure 7-40, we created a new Report Form called *db2perf*.

```
  File  Confirm  Samples  Options  Help
 ------------------------------------------------------------------------------
                                Report Forms                  Row 1 to 1 of 1
 Command ===> new db2perf                                    Scroll ===> CSR

 Report Forms Data Set  . . : CICSLS5.CICSPA.FORM

 /   Name    Type              Description                Changed        ID
```

Figure 7-40 Creating a report form

We were then given the option of which APPLIDs we are interested in extracting. We requested an APPLID of **SCSCPAA1** and a form type of **List** (Figure 7-41).

```
---------------------------- Report Forms ----------------------------
  File  Systems  Options  Help
 ------------------------------------------------------------------
                         New Report Form
 Command ===>

 Specify the name of the new Report Form and its options.

 Name  . . . . . . DB2PERF

 APPLID  . . . . . SCSCPAA1  +  Version (VRM) . . 530
 MVS Image . . . .
                                Field Categories

 Form Type or Model . . 1  1. List
                           2. List Extended (Sorted)
                           3. Summary
                           4. Model (specified below)

 Model
```

Figure 7-41 List type of Report Form

The List Report Form screen (Figure 7-42) was displayed. From here, we chose which fields we wanted to extract. Since we were interested in CICS DB2 performance, we needed to move the DB2 fields we had available before the EOX line.

```
  File  Edit  Confirm  Upgrade  Options  Help
--------------------------------------------------------------------------------
                      EDIT LIST Report Form - DB2PERF     Row 1 of 220 More: >
Command ===>                                                  Scroll ===> CSR

Description  . . . List Report Form                 Version (VRM): 530

Selection Criteria:
    Performance

   Field
/  Name +    Type     Description
   TRAN               Transaction identifier
   PROGRAM            Program name
   RESPONSE           Transaction response time
   CPU       TIME     CPU time
   DB2CONWT  TIME     DB2 Connection wait time
   DB2RDYQW  TIME     DB2 Thread wait time
   DB2REQCT           DB2 requests
   DB2WAIT   TIME     DB2 SQL/IFI wait time
   RMIOTIME           Resource Manager Interface (RMI) other time
   RMISUSP   TIME     Resource Manager Interface (RMI) suspend time
   RMITIME   TIME     Resource Manager Interface (RMI) elapsed time
   EOX                ---------------- End of Extract ---------------
```

Figure 7-42 List Report Form screen

We created another report set. Here we chose **Export**. The next screen showed the Exports screen, where we specified the Form we just created (Figure 7-42), along with the data set we were using to export the data (Figure 7-43).

```
  File  Filter  Edit  Systems  Options  Help
--------------------------------------------------------------------------------
                             DB2REP2 - Exports                  Row 1 from 1
Command ===>                                                  Scroll ===> CSR

      ---- System Selection -----                        Selection
/ Exc APPLID +  Image +  Group +    Recap      Form +     Criteria
                         DB2GROUP   EXPT0001   DB2PERF      NO

      Output Data Set . .  'CICSLS5.DB2.EXPORT'
--------------------------------------------------------------------------------
********************************* End of list *********************************
```

Figure 7-43 Exports screen

We were only interested in the CICS transactions DB2N and DB2R, so we selected them in the Performance select statement as shown in Figure 7-44.

```
  File  Edit  Object Lists  Options  Help
--------------------------------------------------------------------------------
                    DB2REP2 - Performance Select Statement Row 1 of 10 More: >
Command ===>                                                  Scroll ===> CSR

         Active  --------------- Report Interval ----------------
   Inc   Start   -------- From ---------  --------- To ----------
   Exc   Stop    MM/DD/YYYY  HH:MM:SS.TH  MM/DD/YYYY  HH:MM:SS.TH


--------------------------------------------------------------------------------

   Inc  Field             --- Value or Range ---   Object
/  Exc  Name +    Type    Value/From   To          List +
   INC  TRAN              DB2N
   INC  TRAN              DB2R
```

Figure 7-44 Performance Select Statement screen

We then submitted this Report Set and then viewed the job output. The extract informed us of how many records we had extracted. In Figure 7-45, you see that we extracted 11,855 records.

```
V1R3M0                                          CICS Performance Analyzer
                                                     Performance List
                                          ____________________________________________
EXPT0001 Printed at 16:43:42 10/14/2003    Data from 13:41:59 10/11/2003      APPLID SCSCPJA7      Page       1


CPAOEX01 Extract has completed successfully
         Data Set Name . . . . CICSLS5.DB2.EXPORT
         Record count  . . . .      11,855
```

Figure 7-45 Record count of extracted records

We then viewed the output data set using ISPF. Figure 7-46 shows the output.

```
Tran;Program;Response;User CPU Time;DB2ConWt Time;DB2ThdWt Time;DB2 Reqs;DB2SQLWt Time;RMIOther;RMI Susp Time;RMI Elap Time
DB2R;PROGDB2R;   .0036;   .0018;   .0000;   .0000;      17;   .0000;   .0000;   .0000;   .0017
DB2R;PROGDB2R;   .0035;   .0017;   .0000;   .0000;      17;   .0000;   .0000;   .0000;   .0015
DB2R;PROGDB2R;   .0046;   .0017;   .0000;   .0000;      17;   .0000;   .0000;   .0000;   .0017
DB2N;PROGDB2N;   .0119;   .0027;   .0000;   .0000;      17;   .0000;   .0000;   .0000;   .0020
DB2R;PROGDB2R;   .0028;   .0018;   .0000;   .0000;      17;   .0000;   .0000;   .0000;   .0014
DB2N;PROGDB2N;   .0068;   .0020;   .0000;   .0000;      17;   .0000;   .0000;   .0000;   .0022
DB2R;PROGDB2R;   .0042;   .0020;   .0000;   .0000;      17;   .0000;   .0000;   .0000;   .0021
DB2R;PROGDB2R;   .0036;   .0020;   .0000;   .0000;      17;   .0000;   .0000;   .0000;   .0024
DB2R;PROGDB2R;   .0026;   .0019;   .0000;   .0000;      17;   .0000;   .0000;   .0000;   .0016
DB2R;PROGDB2R;   .0090;   .0018;   .0000;   .0000;      17;   .0000;   .0000;   .0000;   .0018
DB2R;PROGDB2R;   .0092;   .0022;   .0000;   .0000;      17;   .0000;   .0000;   .0000;   .0052
DB2R;PROGDB2R;   .0094;   .0021;   .0000;   .0000;      17;   .0000;   .0000;   .0000;   .0019
DB2R;PROGDB2R;   .0056;   .0018;   .0000;   .0000;      17;   .0000;   .0000;   .0000;   .0022
DB2R;PROGDB2R;   .0083;   .0019;   .0000;   .0000;      17;   .0000;   .0000;   .0000;   .0036
DB2R;PROGDB2R;   .0084;   .0018;   .0000;   .0000;      17;   .0000;   .0000;   .0000;   .0018
DB2R;PROGDB2R;   .0076;   .0019;   .0000;   .0000;      17;   .0000;   .0000;   .0000;   .0034
DB2N;PROGDB2N;   .0267;   .0029;   .0000;   .0000;      17;   .0000;   .0000;   .0000;   .0030
DB2R;PROGDB2R;   .0044;   .0020;   .0000;   .0000;      17;   .0000;   .0000;   .0000;   .0017
DB2R;PROGDB2R;   .0042;   .0017;   .0000;   .0000;      17;   .0000;   .0000;   .0000;   .0021
DB2R;PROGDB2R;   .0073;   .0019;   .0000;   .0000;      17;   .0000;   .0000;   .0000;   .0045
```

Figure 7-46 Extract of CICS DB2 data

We then transferred the data set down to a PC using the Personal Communications emulation program file transfer.

The transfer options we used in Personal Communications were the name of the host file and the name for the PC file that should be placed in the appropriate directory and should be called .TXT. The transfer type was *text*. We imported the data into Microsoft Excel.

We started Microsoft Excel and clicked **File -> Open**. We selected the file we wanted to open. Then the Text Import Wizard screen opened. Here, we chose **Delimited** and then **Semicolon**. Semicolon was the delimiter we used when creating the extract file in CICS PA.

After we had the data in Microsoft Excel, we created a chart. As shown in Figure 7-47, we produced a graph that shows the average CPU Time for the DB2N and the DB2R transactions we ran earlier. It also shows the improvement in CPU times for DB2R over DB2N.

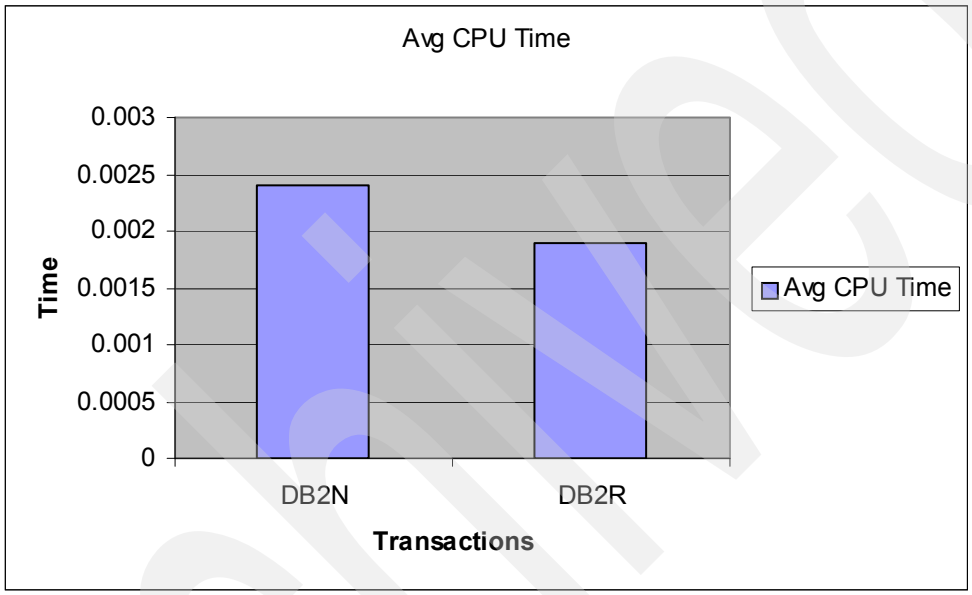

Figure 7-47 CPU Time by transaction

7.8 Conclusion

Using a set of CICS PA reports and extracts, we showed the performance advantages of using the threadsafe environment as opposed to a non-threadsafe. We also showed how you can tune the MAXOPENTCBS SIT parameter, TCBLIMIT DB2CONN parameter, and THREADLIMIT DB2Entry parameter to improve overall performance or the performance of a specific transaction.

8

WebSphere MQ

With the new WebSphere MQ report, CICS Performance Analyzer (PA) 1.3 offers the possibility to produce comprehensive reports containing detailed information about the MQ application programming interface (API) calls that are executed in CICS transactions. This chapter provides an overview of the new reports that can be produced from the MQ storage management subsystem (SMF) 116 accounting records written only from CICS transactions.

First we give a brief overview of MQ accounting trace records and describe the MQ provided sample transactions that we used. Then we go through a scenario. We show the content of MQ list and summary reports and how CICS performance data can be related to MQ reports. We also provide a sample of a Transaction Temporary Storage Usage Summary report.

8.1 Overview

CICS PA MQ reports use the WebSphere MQ accounting data included in an SMF type 116 record to provide a performance analysis of the CICS transactions that access an MQ queue manager. WebSphere MQ accounting records are produced when the Accounting Trace component of WebSphere MQ is activated. MQ traces can be selected by class. There are two possible classes for an MQ accounting record:

- Class 1 records contain the CPU time spent processing WebSphere MQ API calls and the count of MQGET and MQPUT calls.
- Class 3 records contain enhanced accounting and statistical data for each task at thread and queue level.

There are two types of CICS PA MQ reports:

- **CICS PA MQ List report**: This report provides a detailed trace of the WebSphere MQ accounting records, reporting the comprehensive performance data contained in the Class 1 and Class 3 records.
- **CICS PA MQ Summary report**: This report provides an analysis of the MQ system and queue resources used and the transactions they service. The data can be summarized by CICS transaction ID or MQ queue name or both.

CICS PA 1.3 supports the WebSphere Accounting and statistical data from MQSeries for OS/390 Version 5.2 and from IBM WebSphere MQ for z/OS Version 5.3 and 5.3.1.

8.2 Environment

We started CICS region CICSLSA5 that connects to a WebSphere MQ queue manager. The SSID of the MQ subsystem is MQFI. The name of the queue that we used is CICSPA.MQ. We did not run a workload but decided to use the MQ provided sample transactions to see the result of the execution of these transactions in the CICS PA MQ reports.

The sample MQ transactions are:

- MVPT executes program CSQ4CVK1 that is a sample program to put a number of messages to a queue.
- MVGT executes program CSQ4CVJ1 that is a sample program to get a number of messages from a queue. These messages are written to a CICS temporary storage queue.

The transaction syntax is:

`MVPT`,*nummsgs,padchar,msglength,persistence,qname*

`MVGT`,*nummsgs,gettype,syncpoint,qname*

Note the following explanation:

- *nummsgs* is the number of messages written to or read from the queue.
- *padchar* is the character that will be written to the message buffer.
- *msglength* is the length of the message.
- *persistence* is P for a persistent message or N for a non-persistent message.
- *qname* is the name of the queue.
- *gettype* is B for a BROWSE-GET or D for a DESTRUCTIVE-GET.
- *syncpoint* is S for a SYNCPOINT or N for NO-SYNCPOINT.

8.3 CICS changes

Authorized program analysis report (APAR) PQ76703 adds some new monitoring and statistics functions to CICS TS 2.2. Refer to the list of enabling PTFs in Table 2-1 on page 26. One of the new options specifies whether you want additional monitoring performance class data to be collected for the resource managers used by your transactions. This way, the time spent in the External Resource Managers (ERM) is added in different new Resource Manager Interface (RMI) fields in the CMF Performance class record. This option is activated via a new RMI parameter on the TYPE=INITIAL macro of the MCT.

Before running this scenario, we assembled the MCT that is shown in Example 8-1. It shows the specification of the RMI=YES parameter and the suffix that we specified for the MCT parameter in the SIT or SYSIN overriding at CICS initialization.

Example 8-1 MCT with RMI=YES

```
//         JOB
/*JOBPARM SYSAFF=SC66
//PLEASE EXEC DFHAUPLE,INDEX='CICSTS22.CICS',
//       INDEX2='CICSTS22.CICS'
//ASSEM.SYSUT1 DD *
RMI      DFHMCT TYPE=INITIAL,                                  *
               APPLNAME=YES,                                   *
               FILE=10,                                        *
               RMI=YES,                                        *
               SUFFIX=RM
*
         DFHMCT TYPE=FINAL
         END
//LNKEDT.SYSLMOD DD DISP=SHR,DSN=CICSSYSF.APPL62.LOADLIB
//LNKEDT.SYSIN DD *
   NAME DFHMCTRM(R)
```

This scenario includes the MQ RMI field in the reports that we print with CICS PA.

8.4 MQ accounting trace

Before we ran the sample MQ transactions, we started the MQ traces by entering the command:

```
- MQFI START TRACE(ACCTG) DEST(SMF) CLASS(01:03)
```

From a CICS terminal, we ran the following transactions:

- MVPT,500,*,40,P,CICSPA.MQ
- MVPT,100,*,400,N,CICSPA.MQ
- MVGT,100,B,N,CICSPA.MQ
- MVGT,100,D,N,CICSPA.MQ
- MVPT,50,*,50,P,CICSPA.MQ
- MVPT,50,*,1400,P,CICSPA.MQ
- MVGT,100,D,N,CICSPA.MQ
- MVGT,100,D,N,CICSPA.MQ
- MVGT,100,D,N,CICSPA.MQ
- MVGT,100,D,N,CICSPA.MQ

- MVGT,100,D,N,CICSPA.MQ
- MVGT,102,D,N,CICSPA.MQ

On the run of the last transaction, the MVGT transaction returned following message on the screen:

```
MQGET 000000101 failed * CC : 000000002 * RC : 000002033 *
```

We received a return code of 2033 indicating that no messages were available.

We switched the SMF data sets and copied the CICS and MQ records to a separate data set called BARI.SMFDATA.MQ4. We used this data set as input for the CICS PA Take-up function. From the CICS PA Primary Option Menu, we selected option 1 (System Definitions), and then option 4 (Take-up). Next, we entered the data set name as shown in Figure 8-1.

```
------------------------- System Definitions -------------------------
   File  Options  Help
 ---------------------------------------------------------------------
                        Data Take-Up from SMF
 Command ===>

 Specify the SMF File for data take-up.

 Data Set Name . . . BARI.SMFDATA.MQ4

 Specify details if data set is not cataloged:
  UNIT  . . . . .          +       VOLSER  . . .          +
  SEQ Number  . .      (1 to 255)

 Execution Mode:
 1  1. Submit Batch JCL
    2. Edit Batch JCL
```

Figure 8-1 System Definitions Take-up function

We returned to the CICS PA Primary Option Menu and selected again the System Definitions option. A screen is displayed indicating that the system definitions were updated by the Take-up function. Figure 8-2 shows the System Definitions screen.

```
  File  Edit  Filter  View  Options  Help
--------------------------------------------------------------------------------
                              System Definitions                Row 1 from 10
Command ===>                                                  Scroll ===> CSR

Select a System to edit its definition, SMF Files and Groups.
                                                                   SMF Files
/   System   Type     Image                Description             System
    SC66     Image             System added by take-up             SC66
    SCSCPJA6 CICS     SC66     System added by take-up             SC66
    D7Q2     DB2      SC66     System added by take-up             SC66
    SCSCPJA7 CICS     SC66     System added by take-up             SCSCPJA7
    SCSCPTA1 CICS     SC66     System added by take-up             SC66
    SCSCPTA2 CICS     SC66     System added by take-up             SC66
    SC66LOGR Logger   SC66     System added by take-up             SC66
    SCSCPAA1 CICS     SC66     System added by take-up             SC66
    MQFI     MQ       SC66     System added by take-up             MQFI
    SCSCLSA5 CICS     SC66     System added by take-up             SCSCLSA5
********************************* End of list *********************************
```

Figure 8-2 MQFI and SCSCLSA5 were added to the system definitions

8.5 MQ reports

We werer ready to produce our first MQ report. On the CICS PA Primary Option Menu, we selected Report Sets. On the Report Sets screen, we entered `NEW MQ` to create a new report set with the name MQ. Figure 8-3 shows the screen that is displayed.

```
  File  Systems  Confirm  Options  Help
--------------------------------------------------------------------------------
EDIT                        Report Set - MQ                       Row 1 of 11
Command ===>                                                  Scroll ===> CSR

Description . . . CICS PA Report Set

Enter "/" to select action.

            ** Reports **                          Active
     +      Options                                  No
     +      Selection Criteria                       No
     +      Performance Reports                      No
     +      Exception Reports                        No
     +      Transaction Resource Usage Reports       No
     -      Subsystem Reports                        No
                 DB2                                 No
            s    WebSphere MQ                        No
     +      System Reports                           No
     +      Performance Graphs                       No
     +      Extracts                                 No
            ** End of Reports **
```

Figure 8-3 New report set with name MQ

8.5.1 MQ class 1 reports

On the Report Set screen, we selected WebSphere MQ in the Subsystem Reports category resulting in the screen shown in Figure 8-4.

```
    File  Systems  Options  Help
  ------------------------------------------------------------------------------
                          MQ - WebSphere MQ Report
  Command ===>

  MQ System Selection:                    Report Output:
   SSID . . . MQFI  +                      DDname . . . . . . . . . MQ000001
   Image  . . SC66      +                  Print Lines per Page . .      (1-255)
   Group  . .           +

  Reports Required:                       Process Accounting Class Records:
   /  List report                          1  1. Class 1
   /  Summary report                          2. Class 3

  Sort Summary by:
   1  1. Transaction  2. Queue  3. Transaction/Queue  4. Queue/Transaction

  Report Filter:
   Queue Name CICSPA.MQ

  Report Format:
   Title  . . MQ reports of sample transactions

Selection Criteria:
   s  Performance
```

Figure 8-4 Report specifications for Report Set with name MQ

We specified SSID, chose both a List and a Summary report with the summary sorted by transaction name, and entered the queue name for which we wanted the reports. Note that the queue name is *case sensitive*.

When we pressed Enter, the Image field was automatically updated with SC66. We entered a meaningful report title and selected selection criteria. Figure 8-5 shows our select statement. We chose to only look at the sample MQ transaction identifiers starting with MV.

```
  File  Edit  Object Lists  Options  Help
--------------------------------------------------------------------------------
                    MQ - Performance Select Statement       Row 1 of 8 More: >
Command ===>                                                  Scroll ===> CSR

         Active  --------------- Report Interval ----------------
   Inc   Start   -------- From ---------  --------- To ----------
   Exc   Stop    MM/DD/YYYY  HH:MM:SS.TH  MM/DD/YYYY  HH:MM:SS.TH


--------------------------------------------------------------------------------

   Inc  Field            --- Value or Range ---   Object
/  Exc  Name +    Type    Value/From   To          List +
   INC  TRAN              MV*

******************************** End of list ********************************
```

Figure 8-5 Selection criteria for the MQ report set

We returned to the Report Set panel where we entered the `RUN` line action on the WebSphere MQ report. The resulting reports are shown in Figure 8-6.

This report lists the transactions that we executed. Tasks 55 and 56 are adding respectively 500 and 100 messages of 40 and 400 bytes to the queue making a total of 600 messages on the queue. Task 57 reads 100 messages. However, in a Class 1 report, we cannot see that these are non-destructive browse operations. The Class 3 report allows us to distinguish between a browse and a destructive get. Task 58 also does 100 reads but these are destructive, bringing the number of messages to 500. Tasks 59 and 60 add each 50 messages, also with different lengths. The queue depth again is 600 messages. Tasks 61, 62, 63, and 64 each read 100 messages, thus removing the 400 remaining messages with a length of 40. Task 65 also reads 100 messages and removes the 100 messages with a length of 400 bytes. Task 66 asked to get 102 messages but only 100 were left, 50 with length of 50 and 50 with length 1400. After these were read, we received the reason code of 2033 telling that there were no more messages.

The Class 1 Summary report gives an overview per transaction code. It calculates an average value for all fields.

For a more detailed look at the MQ activity, we requested a Class 3 List report. This produces a list of extended information per transaction. The Class 3 report contains information in five sections. For detailed information about these five sections and the fields that these contain, see “WebSphere MQ report” in the *CICS Performance Analyzer for z/OS Report Reference*, SC34-6308.

```
V1R3M0                                                CICS Performance Analyzer
                                                       WebSphere MQ Class 1 List
                                                 ____________________________________________
MQ000001 Printed at 11:54:45 10/17/2003  Data from 11:45:55 10/17/2003                                  Page       1
MQ reports of sample transactions

SSID  APPLID  Tran  Time         Task          CPU  -------------- GET Counts ------------- ------------- PUTx Counts -------------
                                                        <=99     <=999    <=9999   >=10000      <=99     <=999    <=9999   >=10000

MQFI SCSCLSA5 MVPT  11:45:55.52      55    0.076172          0         0         0         0       500         0         0         0
MQFI SCSCLSA5 MVPT  11:46:41.38      56    0.016301          0         0         0         0         0       100         0         0
MQFI SCSCLSA5 MVGT  11:47:06.38      57    0.013788        100         0         0         0         0         0         0         0
MQFI SCSCLSA5 MVGT  11:47:19.69      58    0.023252        100         0         0         0         0         0         0         0
MQFI SCSCLSA5 MVPT  11:47:54.55      59    0.007991          0         0         0         0        50         0         0         0
MQFI SCSCLSA5 MVPT  11:48:23.83      60    0.010075          0         0         0         0         0         0        50         0
MQFI SCSCLSA5 MVGT  11:48:46.67      61    0.022940        100         0         0         0         0         0         0         0
MQFI SCSCLSA5 MVGT  11:48:53.58      62    0.023049        100         0         0         0         0         0         0         0
MQFI SCSCLSA5 MVGT  11:48:59.14      63    0.023461        100         0         0         0         0         0         0         0
MQFI SCSCLSA5 MVGT  11:49:05.95      64    0.023257        100         0         0         0         0         0         0         0
MQFI SCSCLSA5 MVGT  11:49:11.90      65    0.016019          0       100         0         0         0         0         0         0
MQFI SCSCLSA5 MVGT  11:49:19.85      66    0.022962         50         0        50         0         0         0         0         0

V1R3M0                                                CICS Performance Analyzer
                                                      WebSphere MQ Class 1 Summary
                                                 ____________________________________________
MQ000001 Printed at 11:54:45 10/17/2003  Data from 11:45:55 10/17/2003 to 11:49:31 10/17/2003                Page       1
MQ reports of sample transactions

                              ----- Average -----  --------- Average GET Counts ---------   -------- Average PUTx Counts ---------
SSID  APPLID    TRAN     Count        CPU     Calls      <=99     <=999    <=9999   >=10000       <=99     <=999    <=9999   >=10000

MQFI  SCSCLSA5  MVGT         8   0.021091     100.0      81.3      12.5       6.3       0.0        0.0       0.0       0.0       0.0
MQFI  SCSCLSA5  MVPT         4   0.027635     175.0       0.0       0.0       0.0       0.0      137.5      25.0      12.5       0.0
```

Figure 8-6 MQ Class 1 List and Summary reports

Being interested in tasks 55, 57, and 66, we changed the selection criteria before requesting a Class 3 report. Figure 8-7 shows our Performance select statement where we added the three task numbers.

```
   File  Edit  Object Lists  Options  Help
 ------------------------------------------------------------------------------
                    MQ - Performance Select Statement       Row 1 of 4 More: >
 Command ===>                                                 Scroll ===> CSR

          Active  --------------- Report Interval ----------------
    Inc   Start   -------- From ---------  --------- To ----------
    Exc   Stop    MM/DD/YYYY  HH:MM:SS.TH  MM/DD/YYYY  HH:MM:SS.TH


 ------------------------------------------------------------------------------

    Inc  Field            --- Value or Range ---   Object
 /  Exc  Name +    Type    Value/From   To          List +
    INC  TRAN             MV*
    INC  TASKNO           55
    INC  TASKNO           57
    INC  TASKNO           66
********************************* End of list *********************************
```

Figure 8-7 Updated selection criteria for selected tasks

8.5.2 MQ Class 3 reports

We then changed the WebSphere MQ report options to request a Class 3 List report sorted by transaction. Figure 8-8 shows this.

```
  File  Systems  Options  Help
--------------------------------------------------------------------------------
                        MQ - WebSphere MQ Report
Command ===>

MQ System Selection:                    Report Output:
 SSID . . . MQFI  +                      DDname . . . . . . . . . MQ000001
 Image  . . SC66      +                  Print Lines per Page . .      (1-255)
 Group  . .           +

Reports Required:                       Process Accounting Class Records:
 /  List report                          2  1. Class 1
    Summary report                          2. Class 3

Sort Summary by:
 1  1. Transaction  2. Queue  3. Transaction/Queue  4. Queue/Transaction

Report Filter:
 Queue Name

Report Format:
 Title  . . MQ reports of sample transactions

Selection Criteria:
    Performance  *
```

Figure 8-8 Request for Class 3 List report sorted by transaction

The resulting report is shown in Figure 8-9.

Task 55 shows the detail about an MVPT transaction. Tasks 57 and 66 are MVGT transactions. In this Class 3 report, we see for task 57 that after the GET count, there is a breakdown of GET request sub-types. Here we see that all GET requests were browse any requests. Other possibilities are browse specific, destructive any and destructive specific. They only appear if the count is non-zero. For task 66, we see that all GET requests were destructive.

For task 66 we also see that the GET count here is 101. We requested to read 102 messages. The Class 1 record tells that 100 messages were read, the Class 3 record tells that 101 GET requests were issued. Unfortunately, the Class 3 data does not include the reason code for an API request so we cannot see from this report that the last GET returned a reason code of 2033.

```
 V1R3M0                                                CICS Performance Analyzer
                                                       WebSphere MQ Class 3 List
                                                 ____________________________________________
MQ000001 Printed at 11:57:17 10/17/2003  Data from 11:45:55 10/17/2003                                    Page       1
MQ reports of sample transactions

SSID: MQFI APPLID: SCSCLSA5 Tran: MVPT  Task:     55  UserID: CICSUSER  NetName: N/A              UOWID: N/A
Channel:                      Channel Connection:                                                  Start: 10/17/2003 11:45:55.29

  Other    Total Calls           1  Avg Elapsed   0.048655   Avg CPU      0.000121
           #Old Pages        1,222  #New Pages          56

  Queue: CICSPA.MQ
  QType: LOCAL    IType: NONE       GDisp: Q_MGR    Date: 10/17/2003  Time: 11:45:55  P/Set No:        4  BufferPool No:        3
  First Opened: 10/17/2003 11:45:55.29   Last Closed: 10/17/2003 11:45:55.48   CF Structure Name:

               Count     Elapsed      CPU      Susp Elp  JnlWrt Elp   PS Req's  PS Rd Elp   Expired   Page Skip  Msgs Skip
             _________ _________ _________ _________ _________ _________ _________ _________ _________ _________
    OPEN             1  0.000151  0.000149
    CLOSE            1  0.000102  0.000050
    PUT            500  0.000154  0.000135  0.000000   0.000000       0.0  0.000000

    PUT      Total Bytes      20,000  #PUT w/Data           500  Min Msg Size        40  Max Msg Siz         40

SSID: MQFI APPLID: SCSCLSA5 Tran: MVGT  Task:     57  UserID: CICSUSER  NetName: N/A              UOWID: N/A
Channel:                      Channel Connection:                                                  Start: 10/17/2003 11:46:41.39

  Other    Total Calls           1  Avg Elapsed   0.000214   Avg CPU      0.000103
           #Old Pages          211  #New Pages           0

  Queue: CICSPA.MQ
  QType: LOCAL    IType: NONE       GDisp: Q_MGR    Date: 10/17/2003  Time: 11:46:41  P/Set No:        4  BufferPool No:        3
  First Opened: 10/17/2003 11:47:06.31   Last Closed: 10/17/2003 11:47:06.38   CF Structure Name:

               Count     Elapsed      CPU      Susp Elp  JnlWrt Elp   PS Req's  PS Rd Elp   Expired   Page Skip  Msgs Skip
             _________ _________ _________ _________ _________ _________ _________ _________ _________ _________
    OPEN             1  0.000168  0.000166
    CLOSE            1  0.000062  0.000062
    GET            100  0.000140  0.000115  0.000000   0.000000       0.0  0.000000       0.0       0.1       0.0
     BRW ANY       100

    GET      Total Bytes       4,000  #GET w/Data           100  Min Msg Size        40  Max Msg Siz         40

SSID: MQFI APPLID: SCSCLSA5 Tran: MVGT  Task:     66  UserID: CICSUSER  NetName: N/A              UOWID: N/A
Channel:                      Channel Connection:                                                  Start: 10/17/2003 11:49:11.90

  Other    Total Calls           1  Avg Elapsed   0.000137   Avg CPU      0.000063
           #Old Pages          230  #New Pages           0

  Queue: CICSPA.MQ
  QType: LOCAL    IType: NONE       GDisp: Q_MGR    Date: 10/17/2003  Time: 11:49:11  P/Set No:        0  BufferPool No:        0
  First Opened: 10/17/2003 11:49:19.22   Last Closed: 10/17/2003 11:49:19.85   CF Structure Name:

               Count     Elapsed      CPU      Susp Elp  JnlWrt Elp   PS Req's  PS Rd Elp   Expired   Page Skip  Msgs Skip
             _________ _________ _________ _________ _________ _________ _________ _________ _________ _________
    OPEN             1  0.000169  0.000168
    CLOSE            1  0.000042  0.000042
    GET            101  0.005375  0.000204  0.005147   0.009894       0.0  0.000000       0.0       0.3       0.0
     DES ANY       101

    GET      Total Bytes      72,500  #GET w/Data           100  Min Msg Size        50  Max Msg Siz      1,400
```

Figure 8-9 MQ Class 3 report

We removed the selection for the three transactions before selecting a summary report. Figure 8-10 shows that we asked for a Class 3 Summary report sorted first by queue and then by transaction.

```
   File  Systems  Options  Help
 ------------------------------------------------------------------------------
                          MQ - WebSphere MQ Report
 Command ===>

 MQ System Selection:                      Report Output:
  SSID . . . MQFI  +                        DDname . . . . . . . . . MQ000001
  Image  . . SC66      +                    Print Lines per Page . .      (1-255)
  Group  . .           +

 Reports Required:                         Process Accounting Class Records:
     List report                            2  1. Class 1
  /  Summary report                            2. Class 3

 Sort Summary by:
  4  1. Transaction  2. Queue  3. Transaction/Queue  4. Queue/Transaction

 Report Filter:
  Queue Name CICSPA.MQ

 Report Format:
  Title  . . MQ reports of sample transactions

Selection Criteria:
      Performance  *
```

Figure 8-10 Request for Class 3 Summary report

The resulting report is shown in Figure 8-11. The first part of the report gives calculated averages about the total activity on queue CICSPA.MQ, in this case for 12 tasks. The second part of the report gives a task identification and a summary of the task-related statistics.

```
 V1R3M0                                          CICS Performance Analyzer
                                        WebSphere MQ Class 3 Summary     (By QUEUE,TRAN)
                                        ____________________________________________
MQ000001 Printed at 11:58:58 10/17/2003  Data from 11:45:55 10/17/2003 to 11:49:31 10/17/2003                    Page       1
MQ reports of sample transactions

Queue: CICSPA.MQ
QType: LOCAL    IType: NONE       GDisp: Q_MGR    QCount:       12

          Count     Elapsed      CPU      Susp Elp  JnlWrt Elp   PS Req's  PS Rd Elp   Expired   Page Skip  Msgs Skip
         ________  _________  _________  ________  __________  _________  _________  _________  _________  _________
  OPEN        1.0   0.000527   0.000172
  CLOSE       1.0   0.000056   0.000046
  GET        66.8   0.004780   0.000188   0.004566    0.008849        0.0   0.000000        0.0        0.1        0.0
   BRW ANY    8.3
   DES ANY   58.4
  PUT        58.3   0.000169   0.000139   0.000000    0.000000        0.0   0.000000        0.0        0.0        0.0

  GET      Avg Bytes      11375.0  Avg #GET w/Data     66.7   Min Msg Size        40  Max Msg Size     1,400
  PUT      Avg Bytes      11041.7  Avg #PUT w/Data     58.3   Min Msg Size        40  Max Msg Size     1,400

  SSID: MQFI  APPLID: SCSCLSA5  Tran: MVGT  Threads:         8
    Other     Avg Count              1.0   Avg Elapsed    0.000176  Avg CPU      0.000072
              Avg #Old Pages       289.4   Avg #New Pages      0.0

  SSID: MQFI  APPLID: SCSCLSA5  Tran: MVPT  Threads:         4
    Other     Avg Count              1.0   Avg Elapsed    0.031832  Avg CPU      0.000100
              Avg #Old Pages       455.0   Avg #New Pages     26.5
```

Figure 8-11 Class 3 Summary report sorted by transaction and by queue

8.5.3 Performance List report

The CICS PA MQ reports give CICS task numbers. With this information we can list the corresponding CICS transaction information and look for the CICS resources that were used by these transactions. In our case, we can use a CICS PA List report to see the temporary storage usage of the MQ sample transactions.

We created a new report form that contains the fields that we were interested in for the analysis of the MVPT and MVGT transactions. This report form in Figure 8-12 shows that we selected to have the TIME and COUNT values of the RMIMQM field. It also shows that we moved the field that contains the number of TS requests to auxiliary storage before the end of report indicator.

```
  File  Edit  Confirm  Upgrade  Options  Help
--------------------------------------------------------------------------------
                      EDIT LIST Report Form - MQ          Row 1 of 263 More: >
Command ===>                                                 Scroll ===> CSR

Description  . . . List Report Form                 Version (VRM): 620

Selection Criteria:
    Performance

   Field
/  Name +    Type     Description
   TRAN                Transaction identifier
   PROGRAM             Program name
   TASKNO              Transaction identification number
   STOP      TIMET     Task stop time
   RESPONSE            Transaction response time
   DISPATCH  TIME      Dispatch time
   CPU       TIME      CPU time
   SUSPEND   TIME      Suspend time
   RMIMQM    TIME      RMI elapsed time for WebSphere MQ requests
   RMIMQM    COUNT     RMI elapsed time for WebSphere MQ requests
   TSPUTAUX            Auxiliary TS PUT requests
   TSTOTAL             TS Total requests
   EOR                 ---------------- End of Report ----------------
```

Figure 8-12 Report form to analyze the CICS part of the MQ transactions

In the MQ Report Set, we deactivated the WebSphere MQ Subsystem report and selected the List Performance report. The same way as we did for the WebSphere MQ report, we selected to have a report only for the transactions with an ID starting with MV.

Figure 8-13 shows the report that we obtained. The RMI MQ time field gives an approximation of how long the tasks were in the RMI for executing the MQ calls. This is not exactly the suspend time as some RMI code is executed before the MQ timer starts. This means that the RMI MQ time contains a small part of dispatch time plus suspend time.

We made the following observations:

- The RMI count for MVPT transactions is three more than the number of PUT requests. This is due to issuing three MQ API calls for OPEN, CLOSE, and sync point. For the MVGT transactions, it is two more than the number of GET requests, because no sync point is issued.
- For task 66, we know that the application was to read up to 102 messages from the queue. One hundred were read successfully and message 101 gave reason code 2033 for no

messages available. Task 66 entered the RMI once more than the other MVGT tasks which successfully read their requested 100 messages.

- The TSPUTAux column shows that each message read was written to auxiliary temporary storage. The additional TS request that appears in TS Total is a DELETEQ TS.

Tip: We showed how to relate CICS SMF record information to MQ information based on transaction IDs. This was easy to do since we were looking at a limited number of transactions. This can be less evident when recording over long intervals where multiple different transactions can have the same task number. In this case, we recommend that you also compare the time stamp of both records.

```
 V1R3M0                                                CICS Performance Analyzer
                                                           Performance List
                                                 ____________________________________________________
LIST0001 Printed at 20:28:54 10/17/2003    Data from 11:45:55 10/17/2003                    APPLID SCSCLSA5      Page       1
CICS records for MQ transactions

 Tran Program    TaskNo Stop          Response Dispatch User CPU  Suspend  RMI MQ   RMI MQ  TSPUTAux TS Total
                        Time           Time     Time     Time     Time     Time     Count
 MVPT CSQ4CVK1       55 11:45:55.528    .2709    .1018    .0583    .1691    .2298      503        0        0
 MVPT CSQ4CVK1       56 11:46:41.391    .0711    .0197    .0126    .0514    .0678      103        0        0
 MVGT CSQ4CVJ1       57 11:47:06.382    .1015    .0715    .0255    .0300    .0511      102      100      100
 MVGT CSQ4CVJ1       58 11:47:19.693   1.0679    .0310    .0232   1.0369   1.0579      102      100      101
 MVPT CSQ4CVK1       59 11:47:54.551    .0420    .0077    .0063    .0343    .0404       53        0        0
 MVPT CSQ4CVK1       60 11:48:23.833    .0834    .0081    .0067    .0753    .0814       53        0        0
 MVGT CSQ4CVJ1       61 11:48:46.674    .6047    .0270    .0226    .5777    .5966      102      100      101
 MVGT CSQ4CVJ1       62 11:48:53.582    .5172    .0287    .0229    .4884    .5086      102      100      101
 MVGT CSQ4CVJ1       63 11:48:59.141    .6645    .0279    .0231    .6366    .6566      102      100      101
 MVGT CSQ4CVJ1       64 11:49:05.953    .6142    .0273    .0229    .5868    .6066      102      100      101
 MVGT CSQ4CVJ1       65 11:49:11.901    .0747    .0263    .0222    .0484    .0458      102      100      101
 MVGT CSQ4CVJ1       66 11:49:19.852    .6289    .0320    .0245    .5969    .5757      103      100      101
```

Figure 8-13 Performance List report for MVPT and MVGT

8.5.4 Transaction Resource Usage Temporary Storage report

We also asked for a summary of the Temporary Storage usage of our transactions. To do so, we selected Temporary Storage Usage Summary in the category Transaction Resource Usage Reports as shown in Figure 8-14.

```
  File  Systems  Confirm  Options  Help
--------------------------------------------------------------------------------
EDIT                      Report Set - MQ                          Row 1 of 14
Command ===>                                                  Scroll ===> CSR

Description . . . CICS PA Report Set

Enter "/" to select action.

             ** Reports **                          Active
     +       Options                                  No
     +       Selection Criteria                       No
     +       Performance Reports                      No
     +       Exception Reports                        No
     -       Transaction Resource Usage Reports       No
                  File Usage Summary                  No
             s    Temporary Storage Usage Summary     No
                  Transaction Resource Usage List     No
     -       Subsystem Reports                        No
                  DB2                                 No
                  WebSphere MQ                        No
     +       System Reports                           No
     +       Performance Graphs                       No
     +       Extracts                                 No
             ** End of Reports **
```

Figure 8-14 Selecting Temporary Storage Usage Summary

Two reports can be requested. We first asked for the Transaction Temporary Storage Usage report that summarizes Temporary Storage usage by transaction ID. Figure 8-15 shows the Temporary Storage Summary Report where we selected the Transaction Temporary Storage Usage report.

```
  File  Systems  Options  Help
--------------------------------------------------------------------------------
                  MQ - Temporary Storage Summary Report
Command ===>

System Selection:                        Report Output:
 APPLID . .          +                    DDname . . . . . . . . . TEMP0001
 Image  . .          +                    Print Lines per Page . .      (1-255)
 Group  . .          +

Summary Reports Required:
 /  Transaction Temporary Storage Usage
    Temporary Storage Usage
       Break down by Transaction ID
       Include Transaction Totals

Report Format:
 Title  . .

Selection Criteria:
    Performance
```

Figure 8-15 Selecting Transaction Temporary Storage Usage

Notice that there is no asterisk after the Performance selection Criteria. Indeed, we removed the selection for having only those transaction codes that end on MV. We expected not to see much Temporary Storage activity on this system. We simply wanted to see if there were other users of TS. The report is shown in Figure 8-16.

This report shows that two CICS transactions were also using Temporary Storage. The user transaction that we find in the list is MVGT. For the MVGT tasks, we see a breakdown that contains the TS queue name which is also MVGT. The queue name for the CICS transactions is not available because the TS requests are not done via an EXEC CICS command.

```
 V1R3M0                                          CICS Performance Analyzer
                                          Transaction Temporary Storage Usage Summary
                                          ___________________________________________
TEMP0001 Printed at 17:28:30 10/17/2003    Data from 11:47:06 10/17/2003 to 11:49:38 10/17/2003    APPLID SCSCLSA5     Page       1


                                        ************* TS Calls ************* *** I/O Waits ***
Tran                  #Tasks                Get    Put_Aux Put_Main  Total      TS     Shr_TS
----                 -------            --------- -------- -------- -------- -------- --------
CEMT                       1 Elapse Avg                                      .0000    .0000
                                 Max                                         .0000    .0000
                             Count  Avg        0        1        0        1        0        0
                                    Max        0        1        0        1        0        0

                                        ************* TS Calls ************* *** I/O Waits ***
Tran                  #Tasks                Get    Put_Aux Put_Main  Total      TS     Shr_TS
----                 -------            --------- -------- -------- -------- -------- --------
CESD                       1 Elapse Avg                                      .0000    .0000
                                 Max                                         .0000    .0000
                             Count  Avg        1        1        0        2        0        0
                                    Max        1        1        0        2        0        0

                                        ************* TS Calls ************* *** I/O Waits ***
Tran                  #Tasks                Get    Put_Aux Put_Main  Total      TS     Shr_TS
----                 -------            --------- -------- -------- -------- -------- --------
MVGT                       8 Elapse Avg                                      .0096    .0000
                                 Max                                         .0000    .0000
                             Count  Avg        0      100        0      100        5        0
                                    Max        0      100        0      101       42        0

                                        ************** TS Calls *********** *** I/O Waits ***          ******** TS Item *********
     TSQueue          #Tasks                Get    Put_Aux  Put_Main  Total      TS     Shr_TS            Get    Put_Aux  Put_Main
    ---------------- -------            -------- -------- -------- -------- -------- --------          -------- -------- --------
    MVGT                       8 Elapse Avg    .0000    .0112    .0000    .0113    .0096    .0000
                                 Max    .0000    .0472    .0000    .0472    .0442    .0000
                             Count  Avg        0      100        0      100        5        0                 0    19462        0
                                    Max        0      100        0      101       24        0  Length         0    74900        0
```

Figure 8-16 Transaction Temporary Storage Usage Summary report

We also requested for a Temporary Storage Usage report, shown in Figure 8-17.

```
 V1R3M0                                          CICS Performance Analyzer
                                          Temporary Storage Usage Summary
                                          ___________________________________________
TEMP0001 Printed at 12:03:27 10/17/2003    Data from 11:47:06 10/17/2003 to 11:49:19 10/17/2003    APPLID SCSCLSA5     Page       2


                                        ************ TS Calls ************ *** I/O Waits ***          ******** TS Item *********
 TSQueue          Tran  #Tasks                Get    Put_Aux  Put_Main  Total      TS     Shr_TS            Get    Put_Aux  Put_Main
---------------- ---- -------            -------- -------- -------- -------- -------- --------          -------- -------- --------
MVGT             MVGT       8 Elapse Avg    .0000    .0112    .0000    .0113    .0096    .0000
                                 Max    .0000    .0472    .0000    .0472    .0442    .0000
                             Count  Avg        0      100        0      100        5        0                 0    19462        0
                                    Max        0      100        0      101       24        0  Length         0    74900        0
```

Figure 8-17 Temporary Storage Usage Summary report

Since only one Temporary Storage queue was name found, we received a summary for the MVGT queue. This report is a combination or the two parts of the previous report.

8.6 Conclusion

This chapter showed how easily you can produce list and summary reports by using the new MQ feature in CICS PA 1.3. Using two MQ sample provided transactions, we showed how you can interpret information about MQ API calls in these reports. CICS PA brings an added value to the MQ SMF accounting record by calculating average values and providing this information in the summary report.

We also showed how you can link a performance list report to the MQ reports. This report showed the RMI MQ field that is available in CICS TS 2.2 and that is supported by CICS PA.

9

CICS and MVS System Logger

This chapter describe the interface between CICS Transaction Server (TS) and the MVS System Logger. It also introduces the System Logger reports that you can generate using CICS Performance Analyzer (PA).

Note: This scenario was used to provide a situation that allowed us to demonstrate the use of CICS PA System Logger reports. The CICS regions were not necessarily tuned for peak performance. In some cases, they had a high level of tracing active. Therefore, these scenarios and the results provided are for demonstration only. They do not provide definitive results for a customer environment.

9.1 CICS TS and the MVS System Logger

CICS uses the MVS System Logger for all its logging and journaling requirements. The CICS system log is used for:

- Dynamic transaction backout
- Warm and emergency restarts
- Cold starts, but only if the log contains information required for resynchronizing in-doubt units of work
- Forward recovery logs, auto-journals, and user journals

The MVS System Logger provides a programming interface to access records on a log stream.

Three hardware options are available that CICS can use:

- Non-volatile coupling facility, where logstream data is duplexed in the MVS logger data space
- Volatile coupling facility, where logstream data is duplexed to a staging data set
- Direct access storage device (DASD)-only, where logstream data is duplexed in the z/OS logger data space

Coupling facility and DASD-only log streams

Each log stream is a sequence of blocks of user data that the MVS System Logger internally partitions over three types of storage:

- Primary storage

  This is a structure within a coupling facility that holds the most recent records written to the log stream. Log data written to the coupling facility is also copied to either a data space or a staging data set.

  For DASD-only log streams, a log structure is not available. The primary medium for DASD-only logging is the staging data set. Log data written to a DASD-only log stream is held in a data space and in a staging data set. A staging data set must be defined.

- Secondary storage

  When the primary storage structure for a log stream becomes full, the older records automatically spill into secondary storage, which consists of data sets managed by SMS. This process is known as *DASD offloading*. The allocation of new logger data sets for DASD offloading is known as a *DASD shift*. For DASD-only logging, the primary storage is the staging data set. Therefore, if the staging data set fills, offloading is done in the same way as for coupling facility logging. After data is offloaded, it is still available to the MVS System Logger.

- Tertiary storage

  This storage is used as specified in your HSM policy, by which older records are migrated to some form of archive storage. This archive storage can be either DASD data sets or tape volumes.

Log data is considered “hardened” when it is written to both the coupling facility log structure and a buffer held in a data space (or to staging data sets). MVS keeps the second copy of the data for recovery in the event of a structure failure. A staging data set is always used for DASD-only logging.

Figure 9-1 shows the components of a DASD-only system.

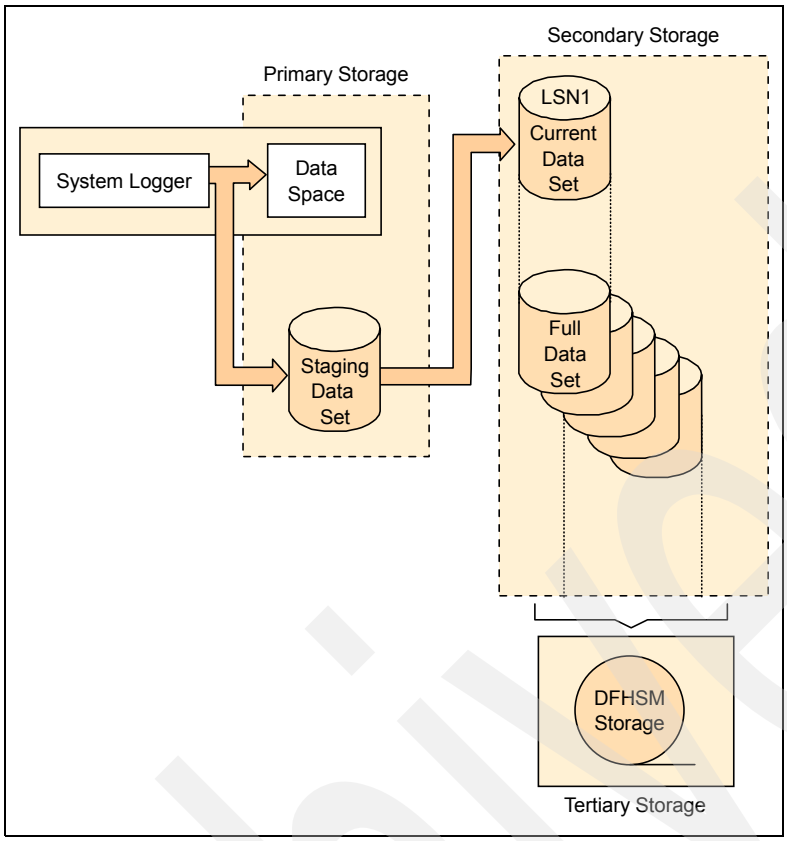

Figure 9-1 DASD-only logging

DASD-only log streams do not use the coupling facility storage. For DASD-only log streams, the log blocks span storage buffers and DASD log data sets. A DASD-only log stream has a single-system scope. Only one system at a time can connect to a DASD-only log stream. Multiple applications from the same system can, however, simultaneously connect to a DASD-only log stream. When a System Logger application writes a log block to a DASD-only log stream, the System Logger writes it first to the local storage buffers for the system and then automatically duplexes it to a DASD staging data set associated with the log stream.

If the staging data set fills up to its defined HIGHOFFLOAD value, the System Logger begins the offload process. As a log stream fills offload data sets on DASD, the System Logger automatically allocates a new offload data set for the log stream.

When you size the log stream for use of CICS logger (DFHLOG), it is important to minimize the amount of data that is offloaded to secondary storage. The logger begins the offload process when the high offload threshold (HIGHOFFLOAD) of the log stream is reached. The offload process consists of two steps:

1. The z/OS logger physically deletes the data in the log stream that is logically marked for deletion by the CICS log-tail deletion process. This happens at activity keypoint time.
2. The z/OS logger calculates how much data must be offloaded to secondary storage, based on the difference between HIGHOFFLOAD and LOWOFFLOAD, less the amount of data that has been deleted since the last offload event. It may happen that an offload does not occur at all. This is possible when we fall below the LOWOFFLOAD value.

The CICS system log is implemented as two MVS System Logger log streams. One log stream is the primary system log stream, DFHLOG, which holds data for most normal (short-lived) in-flight units of work (UOWs). The other log stream is the secondary system log

stream, DFHSHUNT, which holds information for UOWs that are not short-lived. These typically are UOWs that cannot complete because of backout failures, or because they are designed as long-running tasks that issue infrequent syncpoints.

9.2 CICS PA reporting on the System Logger

CICS PA processes System Logger (SMF 88) records to provide information about the System Logger log streams and coupling facility structures that are used by CICS Transaction Server for logging, recovery, and backout operations. The report can help to measure the effects of tuning changes and identify log stream or coupling facility structure performance problems.

The System Logger List report shows information about logstream writes, deletes, and events, as well as Structure Alter events for each SMF recording interval. The System Logger Summary report summarizes logstream and structure statistics so you can measure the System Logger performance over a longer period of time. These reports, when used in conjunction with the CICS logger reports produced from the standard CICS statistics reporting utilities, provide a comprehensive analysis of the logstream activity for all your CICS systems.

9.3 Scenario description

The System Logger scenario looks at several CICS and System Logger parameters that can be tuned. It uses the CICS PA System Logger reports to show the way these parameters effect the System Logger.

For this scenario, we work with the CICS system log, DFHLOG, defined to the MVS System Logger as DASD-only. The CICS region we used for this scenario was at the CICS TS V1.3 level.

We use the CICS PA logger report function to produce reports of the logger activity, and then use the reports to help tune the logger system to perform more efficiently. To provide the System Logger SMF records, we use the same application that we used in the VSAM scenario. Again this application uses TPNS to generate its workload. Refer to Chapter 6, “VSAM application performance analysis and Transaction Resource Monitoring support” on page 139, for a description of our VSAM scenario.

Note that we are using a test CICS environment. As such, the figures and results we deal with are only there to show the use of the CICS PA System Logger reports.

We use the SMF (Type 88) records and the CICS PA reports to monitor the effect that several parameters have on the way the log stream for DFHLOG is effected when they are changed. We look at the SIT parameter AKPFREQ, and the logstream definition parameters LS_SIZE (logstream offload data set size), STG_SIZE (Staging data set size), and LOWOFFLOAD.

To minimize the amount of data offloaded from DFHLOG, you must:

1. Define a suitably-sized staging data set.
2. Ensure that the log-tail deletion process is working effectively.

   CICS log manager controls the size of the system log stream by regularly deleting the oldest completed unit of work records. This operation is associated with activity keypoints. It is important, therefore, that you choose the correct activity keypoint frequency (AKPFREQ), that is, one that allows CICS to keep the system log down to a reasonable

size. If a system log stream exceeds the primary storage space allocated, it spills onto the secondary storage. The resulting I/O activity can adversely affect system performance. If the interval between activity keypoints is long, the volume of data could affect restart times. In general, an activity keypoint interval should be longer than the elapsed time of most transactions. The log tail is the oldest end of the log. At each activity keypoint, the CICS recovery manager requests the log manager to delete the tail of the system log.

Avoid “staging-data-set-full” events. A staging-data-set-full event occurs when a log stream’s staging data set becomes full before offloading of the data has completed.

Offloading is the movement of log data from the primary storage to the offload data sets. The size of the offload data sets needs to be reviewed. The offload data sets should be large enough to avoid too many DASD shifts.

For the CICS system log, the best performance is achieved when CICS can delete log-tail data that is no longer needed before it is written to secondary storage by the MVS System Logger. To monitor that this is being achieved, we need to examine the numbers in the CICS PA fields Count with DASD Write and Count without DASD Write.

These deletion values indicate:

- **Count without DASD Write**: Data was deleted from primary storage without first being written to DASD offload data sets. For a system log stream, this value should be high in relation to the value of “No. with DASD Write”.
- **Count with DASD Write**: Data was deleted from primary storage after being written to DASD offload data sets. For a system log stream, this value should be low in relation to the value in “No. without DASD Write”.

9.4 Scenario run

We started by defining the DASD-only log streams for DFHLOG. To do this, we used the MVS utility IXCMIAPU. The name we chose, CICSTS.SCSCPAA1.DFHLOG, matched the name we defined to the CICS system through the stream name in the JOURNALMODEL definition (see Figure 9-2).

```
 OVERTYPE TO MODIFY                                          CICS RELEASE = 0530
   CEDA  ALter Journalmodel( DFHLOG   )
    Journalmodel   : DFHLOG
    Group          : LOGTEST
    Description  ==>
    Journalname  ==> DFHLOG
    Type         ==> Mvs                Mvs | Smf | Dummy
    Streamname   ==> CICSTS.SCSCPAA1.DFHLOG



SYSID=PAA1 APPLID=SCSCPAA1

 PF 1 HELP 2 COM 3 END            6 CRSR 7 SBH 8 SFH 9 MSG 10 SB 11 SF 12 CNCL
```

Figure 9-2 JOURNALMODEL definition

Example 9-1 shows the initial definition used for the log stream. This definition uses a number of default values.

Example 9-1 Definition of a DASD-only log stream

```
//MSLDEFIN EXEC PGM=IXCMIAPU
//SYSPRINT DD SYSOUT=*,DCB=RECFM=FBA
//SYSIN DD *
   DATA TYPE(LOGR) REPORT(NO)
   DEFINE LOGSTREAM NAME(CICSTS.SCSCPAA1.DFHLOG)
                    DASDONLY(YES)
                    MAXBUFSIZE(64000) STG_SIZE(3000)
                    LS_SIZE(50)
                    OFFLOADRECALL(NO)
                    LOWOFFLOAD(20) HIGHOFFLOAD(80)
/*
```

For this exercise, we used values for the logger options as recommended by the CICS TS manuals. In the case of LOWOFFLOAD and STG_SIZE, the initial calculation is provided after running the DFHLSCU utility or using the formulae available in the CICS manuals. The LS_SIZE should be large enough so that each data set can contain multiple offloads of the primary storage.

The execution of the job in Example 9-1 resulted in the logstream definition shown in Example 9-2, which shows all the parameters and their values.

Example 9-2 Log stream defined

```
LOGSTREAM NAME(CICSTS.SCSCPAA1.DFHLOG) STRUCTNAME() LS_DATACLAS()
          LS_MGMTCLAS() LS_STORCLAS() HLQ(IXGLOGR) MODEL(NO) LS_SIZE(50)
          STG_MGMTCLAS() STG_STORCLAS() STG_DATACLAS() STG_SIZE(3000)
          LOWOFFLOAD(20) HIGHOFFLOAD(80) STG_DUPLEX(YES) DUPLEXMODE(UNCOND)
          RMNAME() DESCRIPTION() RETPD(0) AUTODELETE(NO) OFFLOADRECALL(NO)
          DASDONLY(YES) DIAG(NO) LOGGERDUPLEX() EHLQ(NO_EHLQ)
          MAXBUFSIZE(64000)
```

For the first run, we used the SIT parameter values of:

- AKPFREQ = 4000
- LGDFINT = 30

These are the default values for CICS TS V1.3.

We used TPNS to run the VSAM application to create a workload on the CICS region and then used CICS PA and its Logger reports to monitor the logger SMF records. For each test run, we ran the workload for 20 minutes. Each report was run for a 15 minute period taken from the middle of the 20 minute run.

To work with the System Logger records, we added the Logger System to CICS PA (Figure 9-3). We specified `new sc66logr` to add the Logger System to the CICS PA System Definitions. Here we added the Logger System manually. We could have used the Take-up facility as we did in other chapters in this book.

```
  File  Edit  Filter  View  Options  Help
 ------------------------------------------------------------------------------
                              System Definitions                 Row 1 from 7
 Command ===> new sc66logr                                    Scroll ===> CSR

 Select a System to edit its definition, SMF Files and Groups.
                                                                  SMF Files
 /   System   Type     Image                Description           System
     SC66     Image             System added by take-up           SC66
     SCSCPJA6 CICS     SC66     System added by take-up           SCSCPJA6
     D7Q2     DB2      SC66     System added by take-up           D7Q2
     SCSCPTA2 CICS     SC66     System added by take-up           SC66
     SCSCPJA7 CICS     SC66     System added by take-up           SCSCPJA7
     SCSCPTA1 CICS     SC66     System added by take-up           SC66
     SCSCPAA1 CICS     SC66     System added by take-up           SC66
```

Figure 9-3 System Definitions screen

Figure 9-4 shows that we added the SMF data set containing the Logger SMF records.

```
---------------------------- System Definitions ----------------------------
  File  Edit  View  Options  Help
 ---------------------------------------------------------------------------
                              System Logger            Row 1 of 1 More: >
 Command ===>                                          Scroll ===> CSR

 System Logger definition:
  Logger  . . . . . SC66LOGR  MVS Image . . .
  Description . . .

 / Exc             SMF Data Set Name +              UNIT +  SEQ VOLSER +
       'SMFDATA.ALLRECS.G8525V00'
 ******************************** End of list ****************************
```

Figure 9-4 Adding the SMF data set

Here we used SMFDATA.ALLRECS.G8525V00 for the SMF records.

Next, we needed to define a CICS PA Report Set so that we could report on the Logger usage. This was done in the CICS PA Report Set screen (Figure 9-5), where we defined a new Report Set called logreps.

```
  File  Systems  Confirm  Options  Help
 ------------------------------------------------------------------------------
                                Report Sets                  Row 1 to 5 of 5
 Command ===> new logreps                                   Scroll ===> CSR

 Report Sets Data Set . . : CICSLS5.CICSPA.RSET

  /    Name              Description                Changed        ID
      DB2REPS  CICS PA Report Set              2003/10/14 12:00 CICSLS5
      DB2REP2  CICS PA Report Set              2003/10/15 13:35 CICSLS5
      REPORT1  CICS PA Report Set              2003/10/15 17:37 CICSLS5
      REPORT2  CICS PA Report Set              2003/10/10 14:28 CICSLS5
      REPORT3  CICS PA Report Set              2003/10/11 17:09 CICSLS5
```

Figure 9-5 New Report Set

We then changed the Global Options screen to add the Logger system about which we wished to run reports. Figure 9-6 shows the Global Options screen.

```
  File  Systems  Options  Help
 ------------------------------------------------------------------------------
                           LOGREPS - Global Options
 Command ===>

 System Selection:
  CICS APPLID . .           +  Image . .           +  Group . .           +
  DB2 SSID  . . .       +      Image . .           +  Group . .           +
  MQ SSID . . . .       +      Image . .           +  Group . .           +
  Logger  . . . . sc66logr  +  Image . .           +  Group . .           +

 Report Formatting Options:
  Print Lines per Page . . 60   (1-255)
  Time Zone  . . . . . . .      (Blank for system default or -12 to +12 hours)
  Date Delimiter . . . . . /
  Time Delimiter . . . . . :
```

Figure 9-6 Global Options screen

We then went into the System Logger part of the Report Set so that we could configure it as shown in Figure 9-7.

```
File  Systems  Confirm  Options  Help
 ------------------------------------------------------------------------------
 EDIT                      Report Set - LOGREPS                    Row 1 of 13
 Command ===>                                                 Scroll ===> CSR

 Description . . . CICS PA Report Set

 Enter "/" to select action.

            ** Reports **                                Active
     -      Options                                        No
                Global                                     No
     +      Selection Criteria                             No
     +      Performance Reports                            No
     +      Exception Reports                              No
     +      Transaction Resource Usage Reports             No
     -      Subsystem Reports                              No
                DB2                                        No
                WebSphere MQ                               No
     -      System Reports                                 No
            s    System Logger                             No
     +      Performance Graphs                             No
     +      Extracts                                       No
            ** End of Reports **
```

Figure 9-7 System Logger

We then requested the Summary Report for the log stream CICSTS.SCSCPAA1.DFHLOG as shown in Figure 9-8.

```
  File  Systems  Options  Help
--------------------------------------------------------------------------------
                        LOGREPS - System Logger Report
Command ===>

System Selection:                        Report Output:
 Logger . .           +                   DDname  . . . LOGR0001
 Image  . .           +
 Group  . .           +

Reports Required:                        Report Options:
 /  Summary                               1  1. Sort by Logstream Name
    List      Include ALTER records          2. Sort by Structure Name
              Sort by Time
                                          SMF Recording Interval . .     (mins)
Report Filter:
 Logstream Name . . . CICSTS.SCSCPAA1.DFHLOG
 Structure Name . . .

Report Format:
 Title  . . CICS PA system Logger Report
```

Figure 9-8 Request Summary Logger report

We then entered line action RUN on the Report Set as shown in Figure 9-9. When pressing Enter, another screen opened which gave the chance to change some of the options, such as to Logger System or the data and time for selection. After we created the Report Set to produce the data in the form we required, on any subsequent test when the SMF data is located in a different SMF data set, we added the SMF data set to the system definition on the System Definition screen.

```
  File  Systems  Confirm  Options  Help
--------------------------------------------------------------------------------
                                Report Sets                   Row 1 to 6 of 6
Command ===>                                                 Scroll ===> CSR

Report Sets Data Set . . : CICSLS5.CICSPA.RSET

 /    Name              Description                Changed        ID
      DB2REPS  CICS PA Report Set              2003/10/14 12:00 CICSLS5
      DB2REP2  CICS PA Report Set              2003/10/15 13:35 CICSLS5
run   LOGREPS  CICS PA Report Set              2003/10/16 16:17 CICSLS5
      REPORT1  CICS PA Report Set              2003/10/15 17:37 CICSLS5
      REPORT2  CICS PA Report Set              2003/10/10 14:28 CICSLS5
      REPORT3  CICS PA Report Set              2003/10/11 17:09 CICSLS5
```

Figure 9-9 Run the Report Set

Example 9-3 shows the CICS PA parameters generated by the options we set. Note that we are selecting the log stream that is of interest to us.

Example 9-3 CICS PA parameters generated

```
* Report Set =LOGREPS
* Description=CICS PA Report Set
* Reports for System=SC66LOGR
```

```
          CICSPA IN(SMFIN001),
                 NOAPPLID,
                 LINECNT(60),
                 FORMAT(':','/'),
             LOGGER(OUTPUT(LOGR0001),
                 EXTERNAL(CPAXW001),
                 SUMMARY,
                 SORT(LOGSTREAM),
                 LOGSTREAM('CICSTS.SCSCPAA1.DFHLOG'),
                 TITLE1(
 'CICS PA System Logger Report                                        '))
```

Figure 9-10 shows part of the listing that was produced.

```
 V1R3M0                                                CICS Performance Analyzer
                                                   System Logger - Logstream Summary
                                                 ____________________________________________
LOGR0001 Printed at 18:06:24 10/21/2003     Data from 17:45:00:20 10/21/2003 to 17:55:00:01 10/21/2003                Page      1
CICS PA System Logger Report

Logstream name              MVSID  Structure name          First interval start    Last interval stop      Total Interval
CICSTS.SCSCPAA1.DFHLOG      SC66   *DASDONLY*              17:40:00.00 10/21/2003  17:55:00.00 10/21/2003      0000:15:00

           ----------- IXGWRITES ----------                ---------------- DELETIONS ------------------
                                                 Bytes       Count       Count       Bytes       Bytes
                                               Writn to        With     Without       After    Int Stor
                         Total     Average      Interim        DASD        DASD     Offload    w/o DASD
              Count       Bytes       Bytes      Storage       Write       Write     w. DASD       Write
           --------    --------    --------    --------    --------    --------    --------    --------
Total         22980       12669K         551       94183K       13035       10159       53441K       41615K
Rate(/Sec)       25       14077                   104648          14          11       59378       46239
Minimum        7517     4067508                    30798K        2586        2963       10596K       12141K
Maximum        7758     4325606                    31797K        6093        4107       24982K       16822K

           ------------------------------------------ EVENTS ------------------------------------------
                                 Demand                                                          Demand
                     Staging       DASD       Block     Staging       Entry      Struct     Init'd
           Offloads  Threshld     Shifts      Length        Full        Full        Full    Offloads
           --------  --------    --------    --------    --------    --------    --------    --------
Total            11      1458         39                       0           0           0           0
Rate(/Sec)        0         1          0                       0           0           0           0
Minimum           3         0          7         116           0           0           0           0
Maximum           4         0         17        9238           0           0           0           0

           ----------------------- EVENTS -------------------------    --------------- DASD Writes ----------------
                                                 Struct      Struct
                                               Rebuilds    Rebuilds                    Total
              Type1       Type2       Type3     Init'd     Complt'd       Count       Bytes     Average       Waits
           --------    --------    --------    --------    --------    --------    --------    --------    --------
Total            0           0           0           0           0          48     8967457           0           0
Rate(/Sec)       0           0           0           0           0           0        9964                       0
Minimum          0           0           0           0           0           9     1786582                       0
Maximum          0           0           0           0           0          21     3929235                       0
```

Figure 9-10 System Logger Logstream Summary report

The fields that we concentrated on in the listing were, under DELETIONS:

- **Count With DASD Write**: The number of deletes from interim storage written to DASD
- **Count Without DASD Write**: The number of deletes from interim storage without having been written to the log data set

Under EVENTS, the fields were:

- **Offloads**: The number of times the log stream was offloaded.
- **Staging Thresholds**: The number of times the System Logger detected a Staging Data Set Threshold Hit condition (HIGHOFFLOAD reached) for the staging data set.

- **Demand DASD Shifts**: The number of logstream DASD shifts (additional log data set allocates) initiated by this system. For DFHLOG and DFHSHUNT, this value should be small. Otherwise too much data is being offloaded. (You must check the LS_SIZE parameter for the logstream definition.)

Under DASD Writes, the field is:

- **Waits**: The number of times the System Logger had to suspend processing before writing to DASD because a previous DASD write request has not completed.

We had 39 DASD shifts. Frequent DASD shifts have a negative effect on performance and expose the system to a depletion of the offload data sets. The number of offload data sets is limited by the logger DSEXTENT value. In an effort to decrease the number of DASD shifts, we redefined the DFHLOG, now with an LS_SIZE of 500. Increasing the LS_SIZE and so the size of the logstream DASD data set should reduce the number of DASD shifts as the logstream data set should now be able to contain more data before it needs to be offloaded. Example 9-4 shows the new logstream definition.

Example 9-4 Specifying LS_SIZE

```
//MSLDEFIN EXEC PGM=IXCMIAPU
//SYSPRINT DD SYSOUT=*,DCB=RECFM=FBA
//SYSIN DD *
   DATA TYPE(LOGR) REPORT(NO)
   DEFINE LOGSTREAM NAME(CICSTS.SCSCPAA1.DFHLOG)
                    DASDONLY(YES)
                    MAXBUFSIZE(64000) STG_SIZE(3000)
                    OFFLOADRECALL(NO)
                    LS_SIZE(500)
                    LOWOFFLOAD(20) HIGHOFFLOAD(80)
```

Figure 9-11 shows the results from the next run of the workload. This change improved the values for Offloads, Staging Threshold and DASD shifts. We then concentrated on just the Staging Threshold. The Staging Threshold indicates the number of times we hit the HIGHOFFLOAD value. In an attempt to reduce this number, we changed the SIT value AKPFREQ to 200. A lower AKPFREQ should mean that we carry out log-tail deletion more often and as such do not hit the HIGHOFFLOAD value as often.

```
 V1R3M0                                                CICS Performance Analyzer
                                                  System Logger - Logstream Summary
                                                 ____________________________________________
LOGR0001 Printed at 18:46:53 10/21/2003     Data from 18:25:00:00 10/21/2003 to 18:35:00:01 10/21/2003                Page       1
CICS PA System Logger Report

Logstream name              MVSID  Structure name          First interval start    Last interval stop      Total Interval
CICSTS.SCSCPAA1.DFHLOG      SC66   *DASDONLY*              18:20:00.00 10/21/2003  18:35:00.00 10/21/2003      0000:15:00

           ----------- IXGWRITES ----------                ---------------- DELETIONS -----------------
                                                 Bytes       Count       Count       Bytes       Bytes
                                              Writn to        With     Without       After    Int Stor
                        Total     Average     Interim        DASD        DASD     Offload    w/o DASD
              Count     Bytes       Bytes     Storage       Write       Write    w. DASD       Write
           --------  --------   --------   --------   --------   --------   --------   --------
Total         18589    10425K        561     76198K      10452       6025     42856K     24682K
Rate(/Sec)       20     11583                 84664         11          6      47618      27425
Minimum        2312   1241038               9469952          0          0          0          0
Maximum        8141   4607370                 33374K       7027       3896     28811K     15962K

           ---------------------------------------- EVENTS ----------------------------------------
                                 Demand                                                      Demand
                       Staging     DASD      Block     Staging      Entry     Struct     Init'd
           Offloads   Threshld   Shifts     Length        Full       Full       Full   Offloads
           --------   --------  --------   --------   --------   --------   --------   --------
Total             9         33        4                     0          0          0          0
Rate(/Sec)        0          0        0                     0          0          0          0
Minimum           0          0        0        116          0          0          0          0
Maximum           5          0        2      10363          0          0          0          0

           ----------------------- EVENTS -------------------------    --------------- DASD Writes ----------------
                                                 Struct     Struct
                                               Rebuilds   Rebuilds                   Total
              Type1      Type2      Type3      Init'd    Complt'd      Count       Bytes     Average      Waits
           --------   --------   --------   --------   --------   --------   --------   --------   --------
Total             0          0          0          0          0         28     6735633          0         15
Rate(/Sec)        0          0          0          0          0          0        7484                    0
Minimum           0          0          0          0          0          0           0                    0
Maximum           0          0          0          0          0         16     4537666                    9
```

Figure 9-11 System Logger Logstream Summary report

Figure 9-12 shows the result of the change. This change reduced the number of Staging Threshold hits and also reduced the number of offloads and the number of DASD shifts (reduced it to 0). The largest change it made was to the number of deletions after DASD writes; this also has been reduced to 0. We then redefined the DFHLOG with a larger STG_SIZE of 9000 to try and reduce the number of offloads still further. The STG_SIZE specifies how large to make the staging data set. Making the staging data set larger decreases the number of times an offload needs to happen.

```
 V1R3M0                                                CICS Performance Analyzer
                                                   System Logger - Logstream Summary
                                                 ____________________________________________
LOGR0001 Printed at 19:29:42 10/21/2003     Data from 19:10:00:26 10/21/2003 to 19:20:00:23 10/21/2003                Page       1
CICS PA System Logger Report

Logstream name              MVSID  Structure name          First interval start    Last interval stop      Total Interval
CICSTS.SCSCPAA1.DFHLOG      SC66   *DASDONLY*              19:05:00.00 10/21/2003  19:20:00.00 10/21/2003      0000:15:00

           ----------- IXGWRITES ----------                ---------------- DELETIONS -----------------
                                                 Bytes       Count       Count       Bytes       Bytes
                                               Writn to        With     Without       After    Int Stor
                        Total     Average      Interim        DASD        DASD     Offload    w/o DASD
              Count     Bytes       Bytes      Storage       Write       Write     w. DASD       Write
           --------   --------   --------    --------   --------   --------   --------   --------
Total         22180     16218K         731      93802K          0      22331          0      94233K
Rate(/Sec)       24      18021                  104225          0         24          0     104703
Minimum        5939    4316290                  24982K          0       6581          0      28209K
Maximum        8160    5975569                  34570K          0       8808          0      37208K

           ------------------------------------------ EVENTS ------------------------------------------
                                 Demand                                                        Demand
                        Staging     DASD      Block     Staging      Entry     Struct     Init'd
           Offloads    Threshld   Shifts     Length        Full       Full       Full   Offloads
           --------   --------   --------   --------   --------   --------   --------   --------
Total            10         10          0                     0          0          0          0
Rate(/Sec)        0          0          0                     0          0          0          0
Minimum           3          0          0        116          0          0          0          0
Maximum           4          0          0      22124          0          0          0          0

           ------------------------ EVENTS -------------------------   --------------- DASD Writes ----------------
                                                 Struct     Struct
                                               Rebuilds   Rebuilds                    Total
              Type1      Type2      Type3      Init'd    Complt'd      Count      Bytes    Average      Waits
           --------   --------   --------   --------   --------   --------   --------   --------   --------
Total             0          0          0          0          0          0          0          0          0
Rate(/Sec)        0          0          0          0          0          0          0                     0
Minimum           0          0          0          0          0          0          0                     0
Maximum           0          0          0          0          0          0          0                     0
```

Figure 9-12 System Logger Logstream Summary report

We ran the test transaction again and then viewed the CICS PA System Logger Summary report shown in Figure 9-13. Here you see that we reduced the number of offloads and the staging threshold.

```
 V1R3M0                                                CICS Performance Analyzer
                                                   System Logger - Logstream Summary
                                                 ____________________________________________________
LOGR0001 Printed at 10:31:04 10/22/2003     Data from 10:10:00:23 10/22/2003 to 10:20:00:26 10/22/2003                Page       1
CICS PA System Logger Report

Logstream name              MVSID  Structure name          First interval start    Last interval stop      Total Interval
CICSTS.SCSCPAA1.DFHLOG      SC66   *DASDONLY*              10:05:00.00 10/22/2003  10:20:00.00 10/22/2003      0000:15:00

           ----------- IXGWRITES ----------                ---------------- DELETIONS -----------------
                                                  Bytes       Count       Count       Bytes       Bytes
                                                Writn to        With     Without       After    Int Stor
                          Total     Average     Interim        DASD        DASD     Offload    w/o DASD
              Count       Bytes       Bytes     Storage       Write       Write     w. DASD       Write
           --------    --------    --------    --------    --------    --------    --------    --------
Total         21325       16317K        765      90698K          51       20317      237568      86258K
Rate(/Sec)       23       18130                   100775           0          22         264       95842
Minimum        5198     3522357                    21697K          0           0           0           0
Maximum        8115     6471867                    34664K         51       13549      237568      57614K

           ------------------------------------------ EVENTS ------------------------------------------
                                 Demand                                                          Demand
                     Staging       DASD       Block     Staging       Entry      Struct     Init'd
           Offloads  Threshld     Shifts      Length       Full        Full        Full    Offloads
           --------  --------    --------    --------    --------    --------    --------    --------
Total            3         3           0                       0           0           0           0
Rate(/Sec)       0         0           0                       0           0           0           0
Minimum          0         0           0         116           0           0           0           0
Maximum          2         0           0       17021           0           0           0           0

           ------------------------ EVENTS -------------------------    --------------- DASD Writes ----------------
                                                  Struct      Struct
                                                Rebuilds    Rebuilds                      Total
              Type1       Type2       Type3     Init'd     Complt'd       Count       Bytes     Average       Waits
           --------    --------    --------    --------    --------    --------    --------    --------    --------
Total            0           0           0           0           0           0           0           0           0
Rate(/Sec)       0           0           0           0           0           0           0                       0
Minimum          0           0           0           0           0           0           0                       0
Maximum          0           0           0           0           0           0           0                       0
```

Figure 9-13 System Logger Logstream Summary report

We redefined the system log with a LOWOFFLOAD value of 40%. The test we ran showed that we had two offloads in a 15 minute period. IBM recommends that you try to limit the number of offloads to not more than one an hour.

DFHLSCU recommends a value of 40% for the LOWOFFLOAD value for DFHLOG. However in practice, we have seen that a value between 40% and 60% is a good value. This needs to be reviewed, since too low an offload value may result in physical offloading of log data from primary to secondary storage, after the System Logger offload process completes the physical deletion of any unwanted log data during offload processing. However, a value that is too high may mean that subsequent offload processing occurs more frequently, since less space is freed up from primary storage during an offload operation.

The LOWOFFLOAD value should be greater than the space required for the sum of: the system log data generated during one complete activity keypoint interval plus the system log data generated (between syncpoints) by the longest-running transaction.

Figure 9-14 shows the results. This change caused a slight improvement in the number of offloads.

```
 V1R3M0                                                CICS Performance Analyzer
                                                   System Logger - Logstream Summary
                                                 ____________________________________________
LOGR0001 Printed at 12:21:16 10/22/2003     Data from 11:55:00:00 10/22/2003 to 12:05:00:01 10/22/2003                Page       1
CICS PA System Logger Report

Logstream name              MVSID  Structure name          First interval start    Last interval stop      Total Interval
CICSTS.SCSCPAA1.DFHLOG      SC66   *DASDONLY*              11:50:00.00 10/22/2003  12:05:00.00 10/22/2003      0000:15:00

           ----------- IXGWRITES ----------                ---------------- DELETIONS -----------------
                                                  Bytes       Count       Count       Bytes       Bytes
                                                Writn to        With     Without       After    Int Stor
                         Total     Average      Interim        DASD        DASD     Offload    w/o DASD
              Count       Bytes       Bytes      Storage       Write       Write     w. DASD       Write
           --------    --------    --------    --------    --------    --------    --------    --------
Total         19803       14167K        715       83415K           0       13702           0       57414K
Rate(/Sec)       22       15741                   92683           0          15           0       63793
Minimum        4032     2376964                   16609K          0           0           0           0
Maximum        7960     6135365                   33866K          0        6867           0       28946K

           ------------------------------------------ EVENTS ------------------------------------------
                                 Demand                                                            Demand
                     Staging       DASD      Block     Staging       Entry      Struct     Init'd
           Offloads  Threshld     Shifts     Length        Full        Full        Full   Offloads
           --------  --------   --------   --------   --------   --------   --------   --------
Total             2         2          0                     0          0          0          0
Rate(/Sec)        0         0          0                     0          0          0          0
Minimum           0         0          0        116          0          0          0          0
Maximum           1         0          0      17215          0          0          0          0

           ----------------------- EVENTS -------------------------   ---------------- DASD Writes ----------------
                                                 Struct     Struct
                                               Rebuilds   Rebuilds                      Total
              Type1       Type2       Type3     Init'd    Complt'd       Count       Bytes     Average       Waits
           --------    --------    --------   --------   --------   --------   --------   --------   --------
Total            0           0           0          0          0          0          0          0          0
Rate(/Sec)       0           0           0          0          0          0          0                     0
Minimum          0           0           0          0          0          0          0                     0
Maximum          0           0           0          0          0          0          0                     0
```

Figure 9-14 System Logger Logstream Summary report

Figure 9-15 through Figure 9-17 show the same information but in the List version of the CICS PA report.

```
 V1R3M0                                                CICS Performance Analyzer
                                                         System Logger - List
                                                 ____________________________________________
LOGR0001 Printed at 14:39:18 10/22/2003     Data from 11:55:00:00 10/22/2003 to 12:05:00:01 10/22/2003                Page       1
CICS PA System Logger Report

Logstream name                    Structure name          MVSID       Flag        Interval expired at      Level
CICSTS.SCSCPAA1.DFHLOG            *DASDONLY*              SC66        Staging     11:55:00.00 10/22/2003   SP7.0.2

           ----------- IXGWRITES ----------                ---------------- DELETIONS -----------------
                                                 Bytes       Count       Count       Bytes       Bytes
                                              Writn to        With     Without       After    Int Stor
                        Total     Average     Interim        DASD        DASD     Offload    w/o DASD
              Count     Bytes       Bytes     Storage       Write       Write     w. DASD       Write
           --------   --------   --------   --------   --------   --------   --------   --------
               4032    2376964        590      16609K          0          0          0          0

           ------------------------------------------------ EVENTS ------------------------------------------------
                                 Demand                                                Demand     Minimum     Maximum
Staging        DASD    Staging     Entry     Struct     Init'd      Block      Block
           Offloads   Threshld    Shifts       Full       Full       Full   Offloads     Length      Length
           --------   --------   --------   --------   --------   --------   --------   --------   --------
                  0          0          0          0          0          0          0        116       8614

           ------------------------ EVENTS -------------------------    --------------- DASD Writes ----------------
                                                 Struct     Struct
                                               Rebuilds   Rebuilds                    Total
              Type1      Type2      Type3      Init'd    Complt'd      Count      Bytes    Average      Waits
           --------   --------   --------   --------   --------   --------   --------   --------   --------
                  0          0          0          0          0          0          0          0          0
```

Figure 9-15 System Logger List report (Part 1 of 3)

```
Logstream name                    Structure name          MVSID       Flag        Interval expired at      Level
CICSTS.SCSCPAA1.DFHLOG            *DASDONLY*              SC66        Staging     12:00:00.00 10/22/2003   SP7.0.2

           ----------- IXGWRITES ----------                ---------------- DELETIONS -----------------
                                                 Bytes       Count       Count       Bytes       Bytes
                                              Writn to        With     Without       After    Int Stor
                        Total     Average     Interim        DASD        DASD     Offload    w/o DASD
              Count     Bytes       Bytes     Storage       Write       Write     w. DASD       Write
           --------   --------   --------   --------   --------   --------   --------   --------
               7811    5654754        724      32940K          0       6835          0      28467K

           ------------------------------------------------ EVENTS ------------------------------------------------
                                 Demand                                                Demand     Minimum     Maximum
                     Staging       DASD    Staging      Entry     Struct     Init'd      Block       Block
           Offloads   Threshld    Shifts       Full       Full       Full   Offloads     Length      Length
           --------   --------   --------   --------   --------   --------   --------   --------   --------
                  1          1          0          0          0          0          0        116      12075

           ------------------------ EVENTS -------------------------    --------------- DASD Writes ----------------
                                                 Struct     Struct
                                               Rebuilds   Rebuilds                    Total
              Type1      Type2      Type3      Init'd    Complt'd      Count      Bytes    Average      Waits
           --------   --------   --------   --------   --------   --------   --------   --------   --------
                  0          0          0          0          0          0          0          0          0
```

Figure 9-16 System Logger List report (Part 2 of 3)

```
 V1R3M0                                                CICS Performance Analyzer
                                                         System Logger - List
                                                 ____________________________________________
LOGR0001 Printed at 14:39:18 10/22/2003     Data from 11:55:00:00 10/22/2003 to 12:05:00:01 10/22/2003                Page       2
CICS PA System Logger Report

Logstream name                    Structure name          MVSID       Flag        Interval expired at      Level
CICSTS.SCSCPAA1.DFHLOG            *DASDONLY*              SC66        Staging     12:05:00.00 10/22/2003   SP7.0.2

           ----------- IXGWRITES ----------                ---------------- DELETIONS -----------------
                                                 Bytes       Count       Count       Bytes       Bytes
                                               Writn to        With     Without       After    Int Stor
                         Total     Average     Interim        DASD        DASD     Offload    w/o DASD
              Count       Bytes       Bytes     Storage       Write       Write     w. DASD       Write
           --------    --------    --------    --------    --------    --------    --------    --------
               7960     6135365         771       33866K           0        6867           0       28946K

           ------------------------------------------------ EVENTS ------------------------------------------------
                                 Demand                                                Demand     Minimum     Maximum
                        Staging     DASD     Staging       Entry      Struct     Init'd       Block       Block
           Offloads    Threshld   Shifts        Full        Full        Full   Offloads      Length      Length
           --------    --------    --------    --------    --------    --------    --------    --------    --------
                  1           1           0           0           0           0           0         116       17215

           ------------------------ EVENTS -------------------------    ---------------- DASD Writes ----------------
                                                 Struct      Struct
                                               Rebuilds    Rebuilds                    Total
              Type1       Type2       Type3     Init'd     Complt'd       Count       Bytes     Average       Waits
           --------    --------    --------    --------    --------    --------    --------    --------    --------
                  0           0           0           0           0           0           0           0           0
```

Figure 9-17 System Logger List report (Part 3 of 3)

9.5 Conclusion

To summarize, we showed that the CICS PA System Logger reports enabled us to identify possible areas of improvement. Using the information that the reports provided, we tuned the CICS System Logger log stream to perform more efficiently.

10

Scenarios with CICS Transaction Gateway

This chapter investigates the performance of an application that is composed of a front-end part running in WebSphere Application Server on a Windows 2000 platform and a back-end part running in CICS Transaction Server (TS). The two components of the application communicate through IBM CICS Transaction Gateway (CTG). CTG can be run on either the z/OS or Windows 2000 platform. With CICS Performance Analyzer (PA) reports, we discover that the performance of this application can potentially be improved.

Note: The scenarios were used to provide situations that allow us to demonstrate the use of CICS Performance Analyzer reports. The CICS regions were not necessarily tuned for peak performance. In some cases, they had a high level of tracing active. Therefore, these scenarios and the results provided are for demonstration purposes only. They do not provide definitive results for a customer environment.

10.1 What is CICS Transaction Gateway

IBM CICS Transaction Gateway provides secure, easy access from Web browsers and network computers to CICS applications, using standard Internet protocols in a range of configurations. It is a robust and scalable complement to a Web server. You can implement it as an e-business connector for IBM WebSphere Application Server, which is a Java 2 Platform, Enterprise Edition (J2EE)-compliant run-time environment for Java servlets and Java enterprise beans.

To communicate with CICS, CTG provides external access interfaces. The external access interfaces allow non-CICS applications to access and update CICS resources by initiating CICS transactions or by calling CICS programs. When used in conjunction with CICS communication facilities, they enable non-CICS programs to access and update resources on any CICS system.

The CTG supports such activities as developing graphical user interface (GUI) front ends for CICS applications. It also allows integration between CICS and non-CICS systems.

The latest release of the CTG is V5.0.1, and the currently supported platforms are: z/OS, OS/390, Linux® for S/390, AIX®, HP-UX, Sun Solaris, Windows NT®, and Windows 2000, and XP. CTG is supported for use with CICS/ESA V4.1, CICS/VSE 2.3 and CICS TS for VSE/ESA V1, but only if the CICS Transaction Gateway runs on a distributed platform. For use with CICS TS V1.2 for OS/390 or CICS TS V2 for z/OS, the CTG can run on z/OS, OS/390, or a distributed platform.

10.1.1 Gateway components and downstream protocols

CTG consists of the following principal components:

- **Gateway daemon**: This daemon listens on a Transmission Control Protocol/Internet Protocol (TCP/IP) port waiting for incoming requests from Java client applications.
- **Java class library**: This default /usr/lpp/ctg500/ctg/classes directory contains the following JAR files:
  - *ctgclient.jar*: Java class library
  - *ctgserver.jar*: Classes used by the Gateway daemon and for local Gateway support
  - *ctgsamples.jar*: Samples
  - *ctgadmin.jar*: Trace admin client
  - *cicsj2ee.jar, ccf2.jar, connector.jar*: J2EE classes
- **Client daemon**: This daemon provides client/CICS server connectivity.

Figure 10-1 shows the main components of the CICS Transaction Gateway.

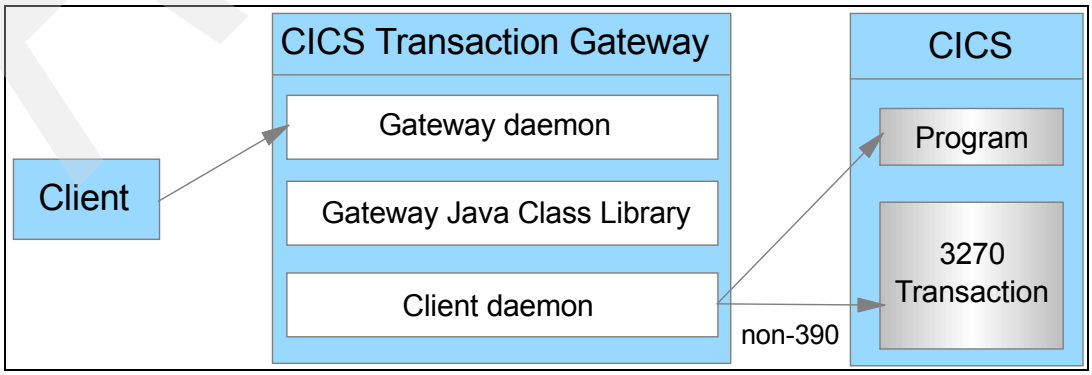

Figure 10-1 Components of the CICS Transaction Gateway

Notice that the client daemon is not used on CTG for z/OS and that a direct access to a 3270 transaction is only possible through a CTG on a distributed platform (non-390).

The Gateway daemon is a long-running process. It functions as a server to network-attached Java client applications (such as applets or remote applications) by listening on a specified TCP/IP port. CTG supports downstream four different CTG network protocols (TCP, Secure Sockets Layer (SSL), Hypertext Transfer Protocol (HTTP), and Secured HTTP (HTTPS)).

You do not have to start the Gateway daemon when a Java client application executes on the same machine where the CTG is running. In this situation, you can use the CTG *local* protocol, which directly invokes the underlying transport mechanism using the Java Native Interface (JNI) module CTGJNI.dll.

10.1.2 Application programming interfaces and upstream protocols

The CTG provides three application programming interfaces (APIs) to client applications:

- **External Call Interface (ECI)** is a call interface to COMMAREA-based CICS applications. On z/OS and OS/390, ECI calls are mapped to External CICS Interface (EXCI) calls that provide similar functionality.
- **External Presentation Interface (EPI**) provides an API to invoke 3270-based transactions (CTG on distributed platform only).
- **External Security Interface (ESI)** is an API that allows password expiration management (PEM) functions to be invoked in CICS, to verify and change user IDs and passwords (CTG on distributed platform only).

On a distributed platform, the CTG client daemon provides upstream connectivity using the following network protocols:

- APPC connections from Windows and AIX platforms to all CICS platforms
- TCP62 (LU 6.2 over IP) connections to CICS/ESA V4.1, CICS TS V1.2 and CICS TS V1.3 for OS/390, and CICS TS for z/OS V2
- TCP/IP connections to CICS TS for z/OS V2.2, CICS TS for VSE/ESA V1.1.1, the TXSeries CICS Servers (AIX, Sun Solaris, Windows NT, Windows 2000, and HP-UX) and CICS OS/2 Transaction Server

Figure 10-2 shows a variety of ways to connect WebSphere Application Server to CICS TS for z/OS or CICS TS for OS/390.

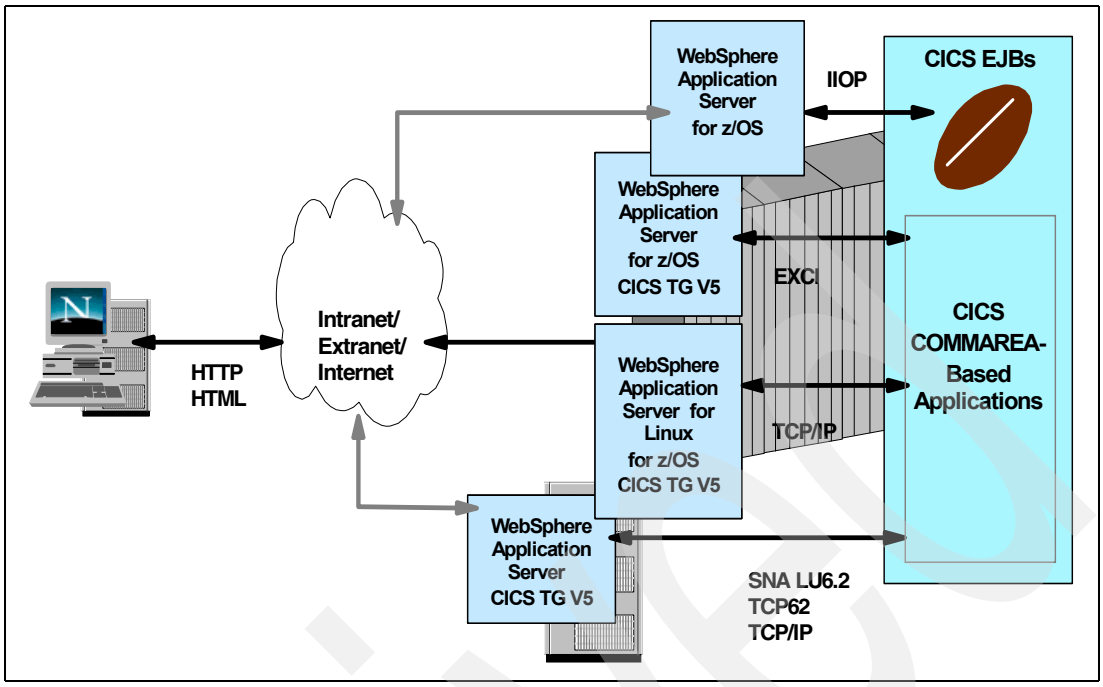

Figure 10-2 WebSphere Application Server and CICS TS

10.2 Scenario description

To provide performance data for a CICS Transaction Gateway scenario, we created the environment shown in Figure 10-3.

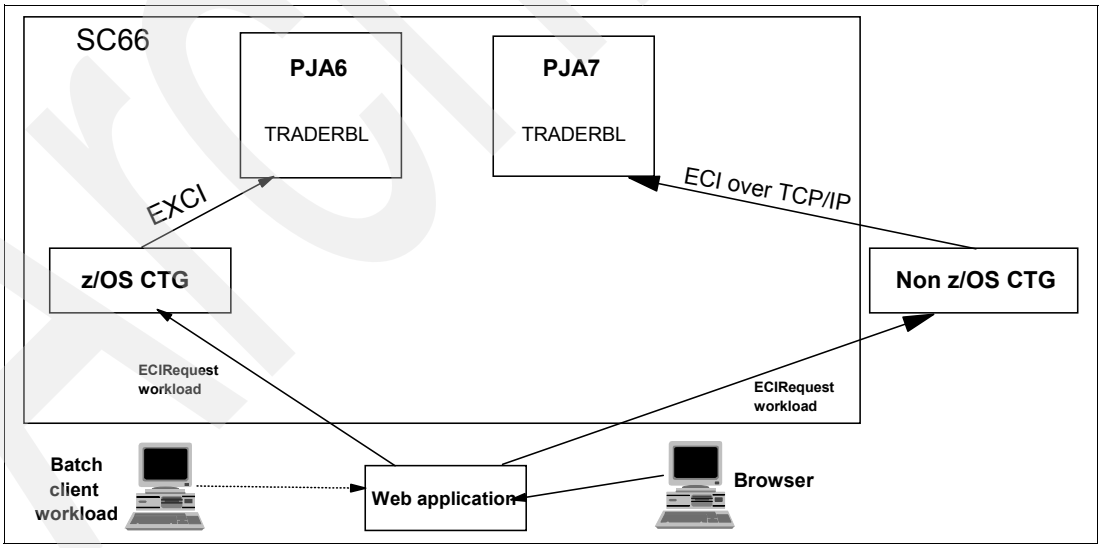

Figure 10-3 CICS Transaction Gateway performance scenario

The front-end application running in WebSphere Application Server on Windows 2000 can connect to the back-end CICS application program TRADERBL using either a CTG V5 for z/OS or CTG V5 for Windows 2000.

We did not attempt to workload manage the ECI or EXCI requests. We connected the CTG for z/OS to a target CICS TS V2.2 system PJA6 and we connected the CTG for Windows 2000 to a target system PJA7.

The application we used in this scenario is fully described in Chapter 10 of *Enterprise JavaBeans for z/OS and OS/390 CICS Transaction Server V2.2*, SG24-6284.

10.2.1 Front-end application

We used a session enterprise bean, named TraderAgent, to link to the back-end application TRADERBL. The enterprise bean is using the ECIRequest Java class to use the ECI interface, which is an interface to COMMAREA-based CICS programs. To direct the ECI requests to the distributed CTG and to the CTG that is running on the z/OS platform, we modified the environment entries of the enterprise bean using the WebSphere Application Server Application Assembly Tool. When the enterprise bean was developed, the environment entries were defined externally. Therefore we can change them without recompiling the bean itself.

We used the following environment entries for this version of the session bean:

- The name of the back-end program
- The CICS SYSID of the target CICS region
- The name of the mirror transaction
- The CTG URL

We changed the name of the CTG URL to direct ECI requests to our distributed CTG or to CTG for z/OS. You can call the enterprise bean by using two different enterprise bean clients:

- We have a Web application available that is using a servlet that is acting as an enterprise bean client for the enterprise bean that we are using. The Web application provides an Hypertext Markup Language (HTML) page that allows us to click the name of the ECIRequest application. When the ECIRequest application is selected, a servlet is started, which in turn, invokes the TraderAgent enterprise bean.
- To provide batch workload for the CTG performance scenario, we used a Windows enterprise bean client to execute the TraderAgent enterprise bean. We arranged a batch command file that allows to specify a loop-counter and a user ID to run the client several times.

10.2.2 Back-end application

We used the Trader application as a target back-end application for the CTG performance scenario. Trader is a sample share trading application that was used previously in other Redbooks projects. Trader, written in COBOL, uses the VSAM access method for file access and the CICS 3270 BMS programming interface.

The application consists of two modules: TRADERPL, which contains the 3270 presentation logic; and TRADERBL, which contains the business logic. TRADERPL invokes TRADERBL using an EXEC CICS LINK and passing a COMMAREA structure for input and output. TRADERBL contains logic to query and write to the persistent VSAM data, stored in two files: the company file and the customer file. We do not use TRADERPL, the presentation logic, for our CTG performance scenario. Instead, we use the TraderAgent enterprise bean. It passes the COMMAREA along with the ECI request and replaces the 3270 presentation logic.

The following business functions are provided by the COBOL application:

- Get_Company Query the list of companies
- Share_value Retrieve current stock quote from file
- Buy_Sell Trade shares in a given company

We indicate which function we want to call by specifying the corresponding value in the COMMAREA.

10.2.3 CTG for z/OS EXCI scenario

We use two different scenarios for the CTG performance measurement. When we direct the ECI request to the CTG on z/OS, the ECI calls used by the application are mapped to the *External CICS Interface*. If we use the distributed CTG, we use the *ECI over TCP/IP* function to call the Trader application.

The EXCI interface is analogous to ECI. It allows programs that are running on z/OS, for example, batch programs or the CTG, to call CICS programs. The programs can transfer data using a COMMAREA. The EXCI allows a user to allocate and open sessions (or pipes) to a CICS region, and to pass distributed program link (DPL) requests over them. The multiregion operation (MRO) facility of CICS inter-region communication (IRC) facility supports these requests, and each pipe maps onto one MRO session, with a limit of 100 pipes per EXCI address space.

10.2.4 Distributed CTG using ECI over TCP/IP

When we direct the ECI request to the distributed CTG, we use the ECI over TCP/IP function to call the Trader application TRADERBL. ECI over TCP/IP allows direct access to CICS applications over TCP/IP. It removes the necessity to either use SNA or to configure TCP62 and the AnyNet® feature of VTAM.

CICS TS releases earlier than CICS TS for z/OS V2.2 do not support ECI over TCP/IP.

10.3 Scenario run

To produce SMF performance records for the CTG scenario, we used a batch CMD file, tsbc_ECI.cmd, that calls the Trader client from any Windows command prompt. We modified the environment variable JAVA_J2EE to point to our Java2 Enterprise Edition classes. Then we checked that the path specified in the CLIENTCLASSPATH environment variable contains the TraderEciClient.jar file. Example 10-1 shows the CMD file that we used to start the TraderEci client. The client is started using the Java command and the -classpath parameter.

Example 10-1 Batch CMD-file to run TraderClient

```
@echo off
rem ----------------------------------------------------------------------
rem TraderEci run command script
rem Use this file to call TraderClient from any DOS command line.
rem ----------------------------------------------------------------------
rem Modify the following to match your directory containing j2ee.jar:
set JAVA_J2EE="c:\j2sdkee1.3.1\lib"
rem ----------------------------------------------------------------------
```

```
set
CLIENTCLASSPATH=.;TraderEciClient.jar;TraderEciEJB.jar;%JAVA_J2EE%\j2ee.jar;..\..\ExternalJ
ARs\CICSEJBClient.jar
rem ----------------------------------------------------------------------
echo *tsbc.cmd*: Starting the EJB client program.
java -classpath %CLIENTCLASSPATH% itso.cics.cts22.trader.test.TraderClient %1 %2
echo *tsbc.cmd*: Finished.
```

The Java command requires two parameters:

- The name of the properties file (specifying the JNDI parameters)
- The name of the user who is going to trade shares (user ID)

The sample TraderClient.properties file is configured to work with the TraderEci session bean deployed to WebSphere Application Server on our Windows 2000 Server.

We wanted to start the TraderECI client a number of times. Therefore, we created another CMD file, WLM_ECI.CMD, so we could start the CMD file shown in Example 10-1 automatically rather than manually.

The CMD file shown in Example 10-2 uses two parameters:

- A loop count in which you can specify the number of times to call the TraderECI client
- The prefix of the user ID you are going to use

The name of the user ID is built by the user ID prefix plus the loop count. Therefore, if you specify parameters `3` and `MYUSER`, then the following user IDs are used: MYUSER1, MYUSER2, and MYUSER3.

Example 10-2 Batch workload CMD file for TraderECI client

```
@echo off
if "%1" == "" goto :out
if "%2" == "" goto :out
CD C:\itsocts22\ejb-components\ECI
for /L %%f in (1,1,%1) do call tsbc_eci.cmd TraderClient.properties %2%%f
echo *tsbc.cmd*: Finished.
goto :end
:out
echo.
echo parameters required!
echo.
echo use   ECI_WLM loopcount userid-prefix
echo.
echo for example ECI_WLM 10 myid (loops ten times using myid1...myid10)
echo.
echo remember that ECI_WLM 100000 MYUSER would exceed the 8 byte userid length.
echo.
echo ECI_WLM 100000 ID will be ok...
echo.
:end
CD C:\itsocts22\WLM_BATCH_CMDS
```

10.3.1 Running the workload using the CTG for z/OS

We used the WLM_ECI.CMD file to run a batch of 50 TraderEciClient applications. Each client application issues eight ECI request calls to back-end application TRADERBL. Each

ECI request call is received by the long running gateway daemon of the CTG for z/OS. The CTG for z/OS then uses the EXCI interface to call the CICS back-end application.

Example 10-3 shows the messages that we received during the process of one TraderEciClient run.

Example 10-3 WLM_ECI.CMD output

```
C:\itsocts22\WLM_Batch_CMDs>eci_wlm 50 userid
*tsbc.cmd*: Starting the EJB client program.
Now starting a session with our TraderAgent using the user 'USERID1'.

EJBHelper::jndiLookup: Going to use nameserver: iiop://9.24.105.29:900/
EJBHelper::jndiLookup: Looking up home interface with JNDI name: domain/legac
ot/ejb/itso/cics/cts22/trader/eci/DistributedTraderAgentHome
EJBHelper::jndiLookup: Creating an InitialContext of type: com.sun.jndi.cosna
g.CNCtxFactory
Querying the version of our TraderAgent:

                package itso.cics.cts22.trader.eci

Asking our TraderAgent for a list of all known companies:
Casey_Import_Export
Glass_and_Luget_Plc
Headworth_Electrical
IBM

Selecting the last company as our current company...

The last company is named IBM, here are its details:
The price per share in dollars = $163.0
The total of outstanding shares = 123456789 shares
The total outstanding share value = $2.0123456607E10
The price one day ago = $163.0
The price two days ago = $162.0
The price three days ago = $160.0
The price four days ago = $161.0
The price five days ago = $159.0
The price six days ago = $156.0
The price seven days ago = $157.0
The cost to sell a share = $400.0
The cost to buy a share = $0.0

The portfolio of USERID1 contains 28 shares in IBM worth $4564.0.

Selling 23 shares...

Buying 16 shares...

The portfolio of USERID1 now contains 35 shares in IBM worth $5705.0.
                ...........
                ...........
                ...........
```

When the batch of 50 TraderEciClient applications completed, we switched the current SMF data set using the /I SMF command. Then we used the Take-Up from SMF function to update our CICS Performance Analyzer system definitions. We performed the following steps to do the Take-up from SMF:

1. On the Primary Option Menu, select option 1 (System definitions).
2. On the System Definition menu, select option 4 (Take-Up from SMF).
3. Specify the SMF File for data take-up and press Enter. A job was generated that processes Take-Up from SMF.
4. Return to the entry of system definitions. It displays a screen that tells you that take-up data is not yet merged to system entries. Press Enter to update the system entries.
5. On the System Definition menu, select option 2 (Maintain SMF files) to check that the list of SMF file is updated with the current SMF data set.
6. Return to the System Definition menu and select option 1 (Define Systems, SMF Files and Groups). We selected CICS system SCSCPJA6 from the list and added the current SMF data set.

Creating a Performance Summary report

To call the back-end program using the EXCI interface, CICS attaches a mirror transaction, which is CSMI by default or your own mirror transaction. Therefore, we are interested in response time and CPU time of mirror transaction CSMI. The first report we created was a Performance Summary report. We performed the following steps to create a Performance Summary report:

1. On the primary options menu, select option 2 (Report Sets).
2. Type NEW in the command line to create a new Report Set.
3. On the next screen, type the name of the Report Set CTGZOS. Press Enter.
4. On the Edit Report Set screen, select **Summary** in the Performance Reports category and pressed Enter.
5. On the Performance Summary Report screen, specify the APPLID of our CICS system SCSCPJA6. Then select the existing Report Form VSAMSUM.

   Refer to Chapter 6, “VSAM application performance analysis and Transaction Resource Monitoring support” on page 139, to find a description of how we created the VSAMSUM Report Form. We typed line action S next to the performance option in group selection criteria and specified a report interval and selection criteria for transaction CSMI as illustrated in Figure 10-4.

```
  File  Edit  Object Lists  Options  Help
--------------------------------------------------------------------------------
                  CTGZOS - Performance Select Statement   Row 1 of 3 More: >
Command ===>                                                Scroll ===> CSR

         Active  --------------- Report Interval ----------------
   Inc   Start   -------- From ---------  --------- To ----------
   Exc   Stop    MM/DD/YYYY  HH:MM:SS.TH  MM/DD/YYYY  HH:MM:SS.TH
   INC   ACTIVE  10/18/2003  13:00:00.00  10/18/2003  13:15:00.00

--------------------------------------------------------------------------------

   Inc  Field             --- Value or Range ---   Object
/  Exc  Name +    Type    Value/From   To          List +
   INC  TRAN              CSMI

********************************* End of list *********************************
```

Figure 10-4 Performance Select Statement screen

6. Return to the Report Set screen. Entered line action `RUN` on Summary typed `SUB` in the command line to run the Report Set.

When the job completed, it produced the output shown in Figure 10-5.

```
 V1R3M0                                                CICS Performance Analyzer
                                                          Performance Summary
                                          ____________________________________________
SUMM0001 Printed at 13:38:12 10/18/2003     Data from 13:01:43 10/18/2003 to 13:05:15 10/18/2003                    Page       1


             Avg      Max       Avg      Avg      Avg      Avg      Avg      Avg      Avg      Avg      Avg      Avg      Avg
Tran     Response Response Dispatch User CPU  Suspend FC Total RLS Wait  FC Wait    FCADD FCBROWSE FCDELETE    FCGET    FCPUT
             Time     Time     Time     Time     Time              Time     Time
CSMI        .0031    .1121    .0015    .0008    .0015        3    .0015    .0000        0        1        0        2        0
****************************** BOTTOM OF DATA ******************************************************************************
```

Figure 10-5 Performance Summary report for CSMI transaction

The Summary report gives a first impression about CICS internal response times and CPU consumption. For a closer look at the CICS internal performance of the CSMI transaction, we provide a Performance List report of CSMI transaction.

Creating a Performance List report

We performed the following steps to create a Performance List report:

1. On the primary options menu, select option 2 (Report Sets). When the list of available Report Sets is displayed, select Report Set **CTGZOS**.
2. Deactivate the summary report that you created earlier when you typed line action `D` next to the summary report option. The *Yes* in the Active column after the summary option is changed to *No*.
3. Type line action `S` next to the list option in group performance reports and press Enter.
4. On the performance list report screen, specify APPLID `SCSCPJA6` and Report Form `VSAML`. Refer to Chapter 6, “VSAM application performance analysis and Transaction Resource Monitoring support” on page 139, which describes how to create Report Form VSAML. Report Form VSAML uses the same sequence of performance fields as VSAMSUM.
5. Still on the Performance List Report screen, type line action `S` next to the performance option in group selection criteria. We specified selection criteria for transaction CSMI and the report interval.
6. Return to the Report Set screen from where you ran the Report Set. A Performance List report job was generated and executed. Figure 10-6 shows the Performance List report that we created.

```
V1R3M0                                                CICS Performance Analyzer
                                                          Performance List
                                                 ____________________________________________
LIST0001 Printed at 14:04:43 10/18/2003    Data from 13:01:43 10/18/2003                APPLID SCSCPJA6      Page       1


 Tran   TaskNo Response Dispatch User CPU  Suspend FC Total RLS Wait  FC Wait    FCADD    FCGET FCBROWSE FCDELETE    FCPUT
                  Time     Time     Time     Time               Time     Time
 CSMI    83134    .0012    .0012    .0008    .0000         6    .0000    .0000        0        0        4        0        0
 CSMI    83135    .0013    .0013    .0008    .0000         2    .0000    .0000        0        2        0        0        0
 CSMI    83136    .0012    .0012    .0008    .0000         2    .0000    .0000        0        2        0        0        0
 CSMI    83137    .0011    .0010    .0008    .0000         2    .0000    .0000        0        2        0        0        0
 CSMI    83138    .0070    .0016    .0008    .0055         3    .0055    .0000        0        2        0        0        1
 CSMI    83139    .0034    .0015    .0008    .0020         3    .0019    .0000        0        2        0        0        1
 CSMI    83140    .0011    .0011    .0008    .0000         2    .0000    .0000        0        2        0        0        0
 CSMI    83141    .0012    .0012    .0008    .0000         2    .0000    .0000        0        2        0        0        0
 CSMI    83142    .0013    .0013    .0009    .0000         6    .0000    .0000        0        0        4        0        0
 CSMI    83143    .0117    .0117    .0008    .0000         2    .0000    .0000        0        2        0        0        0
                           ................
                     ..  400 CSMI transactions ...
                           ................
```

Figure 10-6 Performance List report CSMI transaction

We were surprised that the list contained about 400 mirror tasks. We did not expect mirror tasks to get detached since we specified DFHSIT parameters MROLRM (long running mirror) and MROFSE. MROFSE specifies whether you want to extend the lifetime of the long-running mirror to keep it allocated until the end of the task rather than after a user sync point for function shipping applications.

We started a CEDX session on transaction CSMI to look more closely at the EXEC CICS LINK requests that were issued over the EXCI interface.

Figure 10-7 shows the CEDX screen when it stopped at one of the EXEC CICS LINK commands. The LINK command actually was originated when the TraderEciClient issued an ECI request call to link to the back-end program TRADERBL. The fact that the LINK command was issued with the SYNCONRETURN option implies that the TraderEciClient is not running in extended mode. In traditional CICS client ECI applications, extended mode encompasses a series of one or more ECI requests to a server program, each executed with SYNCONRETURN set to off, followed by a final ECI request (to the same server program) that is executed with SYNCONRETURN set to on. This final ECI call causes CICS to take a sync point on successful completion of the server program, and any changes to resources made by the server program to be committed.

```
TRANSACTION: CSMI PROGRAM: DFHMIRS  TASK: 0008435 APPLID: SCSCPJA6 DISPLAY:  00
 STATUS:  COMMAND EXECUTION COMPLETE
 EXEC CICS LINK PROGRAM
  PROGRAM ('TRADERBL')
  COMMAREA ('Get_Company                                                  '...)
  LENGTH (372)
  DATALENGTH (372)
  SYNCONRETURN
  NOHANDLE


 OFFSET:X'000FF4'    LINE:               EIBFN=X'0E08'
 RESPONSE: NORMAL                        EIBRESP=0

ENTER:  CONTINUE
PF1 : UNDEFINED           PF2 : SWITCH HEX/CHAR     PF3 : END EDF SESSION
PF4 : SUPPRESS DISPLAYS   PF5 : WORKING STORAGE     PF6 : USER DISPLAY
PF7 : SCROLL BACK         PF8 : SCROLL FORWARD      PF9 : STOP CONDITIONS
PF10: PREVIOUS DISPLAY    PF11: EIB DISPLAY         PF12: ABEND USER TASK
```

Figure 10-7 CEDX screen for transaction CSMI

We looked at the Java source of the enterprise bean methods that issue the ECI request call. We found that all of them specified the ECI_NON_EXTEND parameter as well as the ECI_LUW_NEW parameter. This in fact is the reason that each EXCI request runs with SYNCONRETURN set to *on*, which terminates the mirror transaction even if MROLRM SIT parameter is set to *YES*. Example 10-4 shows how the ECI request call has been coded. To avoid detaching the mirror transaction, change the recovery mode to ECI_EXTENDED mode. The last ECI request in series of ECI requests should issue a COMMIT request which results in a sync point.

Example 10-4 ECI request call issued by TraderAgent enterprise bean

```
// create ECI request
request = new ECIRequest(
                ECIRequest.ECI_SYNC,        // simple ECI synchronous call
                aCicsServer,                // servername as configured to CTG
                null,                       // no userid
                null,                       // no password
                aProgramName,               // name of the CICS program to run
                aTranId,                    // mirror transaction ID
                commarea, commarea.length,  // COMMAREA and length
                ECIRequest.ECI_NO_EXTEND,   // one LUW per call
                ECIRequest.ECI_LUW_NEW);    // default LUW ID for new call
```

10.3.2 Running the workload using the distributed CTG

To run our workload using the distributed gateway, we changed the CTG-URL variable of the enterprise beans environment entries. We specified the TCP/IP address of the Windows 2000 Server and the port on which the gateway daemon is listening. Figure 10-8 shows the Application Assembly Tool screen where we modified the environment entries of the DistributedTraderAgent enterprise bean.

Figure 10-8 also shows the remaining environment entries that we used. We specified the CICS SYSID `PJA6`, the program name `TRADERBL`, and the mirror transaction ID `CPMI`.

When the DistributedTraderAgent bean was modified to point to the correct CTG, we started our workload again. We used the same CMD-file that we used for the CTG for the z/OS scenario which is processing a batch of 50 TraderClient calls.

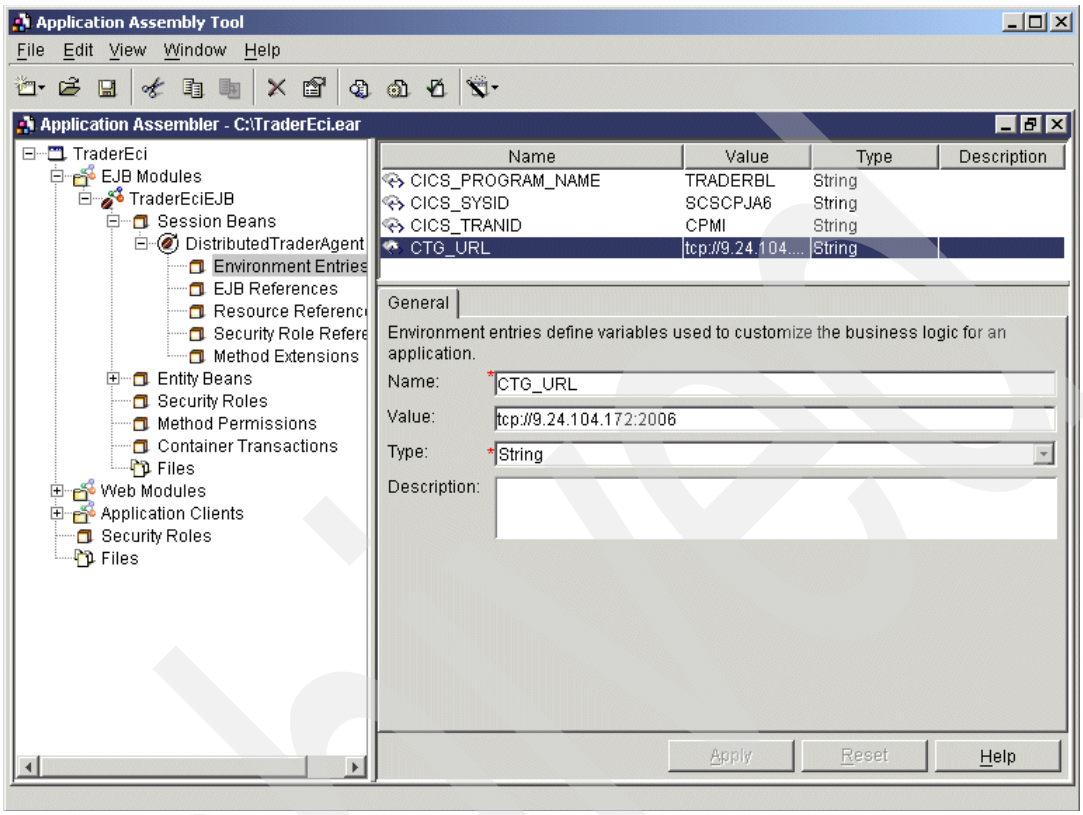

Figure 10-8 Application Assembly Tool

While the workload was running, we verified that it ran correctly by checking the output of the CMD-file as illustrated in Example 10-3 on page 248. When 50 calls to the TraderEciClient completed, we switched the current SMF data set to archive the data.

To investigate the CICS internal performance of ECI over TCP/IP, and to see a comparison between EXCI and ECI over TCP/IP interfaces, we provided a similar Performance Summary report that we used to show the performance of the CTG for z/OS.

When we configured CICS to use ECI over TCP/IP, we created a TCPIPSERVICE resource definition. We specified the ECI protocol which automatically inserted the name of the listener transaction CIEP to the definition. From the CICS internal performance point of view, we wanted to look at two transactions: CPMI which is the mirror transaction that we specified in environment entries of the enterprise bean and CIEP which is the listener transaction for the ECI over TCP/IP function. Figure 10-9 shows a CEMT I TCPIPS display of the TCPIPSERVICE definition we use for ECI over TCP/IP.

```
I TCPIPS
 RESULT - OVERTYPE TO MODIFY
   Tcpipservice(CTGECI6)
   Backlog( 00128 )
   Connections(0000)
   Port(08068)
   Protocol(Eci)
   Ssltype(Nossl)
   Authenticate(Noauthentic)
   Openstatus( Open )
   Transid(CIEP)
   Urm(          )
   Ipaddress(9.12.6.29)
   Socketclose(Wait)
   Closetimeout(000000)
   Dnsgroup()
   Dnsstatus(              )
   Grpcritical(Noncritical)
   Certificate()
+  Attachsec(Verify)

                                                SYSID=PJA6 APPLID=SCSCPJA6
```

Figure 10-9 ECI over TCP/IP TCPIPSERVICE definition

Refer to “Creating a Performance Summary report” on page 249 for details about how to create a performance summary report for the distributed CTG scenario. We performed the following steps to create the Performance Summary report for transactions CIEP and CPMI:

1. Use the Take-Up for SMF function to update the CICS system entries with new performance data.
2. Copy the existing Report Set CTGZOS as CTGECI.
3. Modify the existing selection criteria as illustrated in Figure 10-10.
4. Run the Report Set.

```
  File  Edit  Object Lists  Options  Help
 ------------------------------------------------------------------------------
                    CTGECI - Performance Select Statement   Row 1 of 2 More: >
 Command ===>                                                 Scroll ===> CSR

          Active  --------------- Report Interval ----------------
    Inc   Start   -------- From ---------  --------- To ----------
    Exc   Stop    MM/DD/YYYY  HH:MM:SS.TH  MM/DD/YYYY  HH:MM:SS.TH
    INC   ACTIVE  10/18/2003  14:00:00.00  10/18/2003  14:15:00.00

 ------------------------------------------------------------------------------

    Inc  Field             --- Value or Range ---   Object
 /  Exc  Name +    Type    Value/From   To          List +
    INC  TRAN              CIEP
    INC  TRAN              CPMI
 ********************************* End of list *********************************
```

Figure 10-10 Performance Select Statement screen

When the Performance Summary report job completed, it produced the output shown in Figure 10-11. We did a CPMI to CSMI comparison and found that average response time for CPMI transaction was higher. In any case, the average CPU time of 0.0008 for both transaction is very much the same. The maximum response time of a single transaction might have influenced the average response time of CPMI transaction as well. The workload scenario using the distributed CTG ran one hour later than the CTG for z/OS scenario, therefore other activities on our system may have influenced CICS performance. For example, the ratio between average dispatch time and average CPU time is not good. It appears that the CICS address space was not continuously dispatched when the workload was running.

```
 V1R3M0                                                  CICS Performance Analyzer
                                                            Performance Summary
                                          ____________________________________________________
SUMM0001 Printed at 15:09:28 10/18/2003     Data from 14:08:37 10/18/2003 to 14:10:18 10/18/2003                    Page       1


             Avg      Max       Avg      Avg      Avg      Avg      Avg      Avg      Avg      Avg      Avg      Avg      Avg
Tran     Response Response Dispatch User CPU  Suspend FC Total RLS Wait  FC Wait    FCADD FCBROWSE FCDELETE    FCGET    FCPUT
             Time     Time     Time     Time     Time               Time     Time
CIEP        .0058    .3034    .0005    .0004    .0053        0    .0000    .0000        0        0        0        0        0
CPMI        .0046    .2974    .0024    .0008    .0022        3    .0011    .0000        0        1        0        2        0
****************************** BOTTOM OF DATA ******************************************************************************
```

Figure 10-11 Performance Summary report

As we did for the CTG for z/OS scenario, we produced a Performance List report for the distributed CTG scenario as well. Refer to “Creating a Performance List report” on page 250 for details about how we created a Performance List report for the CTG for the z/OS scenario.

We performed the following steps to create a Performance List report:

1. Edit Report Set CTGECI to deactivate the Summary Report.
2. Activate the Performance List Report.
3. Create a Performance select statement.
4. Run the Report Set.

We used the same enterprise bean for the distributed CTG performance scenario. Therefore, we also discovered that we do not detach the mirror transaction. The Performance List report (Figure 10-10) contained about 400 mirror transactions.

To use long running mirror transactions for this scenario, we must change the ECI request calls issued by the enterprise bean. We must change the parameter ECI_NON_EXTENDED to ECI_EXTENDED. We must also change the logic of the enterprise bean slightly, since a token must be passed along with the request and the last ECI request call must be COMMIT or BACKOUT. In addition, we must enable the Gateway daemon support of z/OS Resource Recovery Services (RRS) using the CTG_RRMNAME environment variable.

```
V1R3M0                                                CICS Performance Analyzer
                                                          Performance List
                                                 ____________________________________________
LIST0001 Printed at 15:04:45 10/18/2003    Data from 14:08:37 10/18/2003                APPLID SCSCPJA6      Page       1


 Tran   TaskNo Response Dispatch User CPU  Suspend FC Total RLS Wait  FC Wait    FCADD    FCGET FCBROWSE FCDELETE    FCPUT
                  Time     Time     Time     Time               Time     Time
 CIEP    83541    .0021    .0005    .0004    .0017        0    .0000    .0000        0        0        0        0        0
 CPMI    83542    .0021    .0016    .0009    .0005        6    .0000    .0000        0        0        4        0        0
 CIEP    83543    .0020    .0005    .0004    .0015        0    .0000    .0000        0        0        0        0        0
 CPMI    83544    .0016    .0012    .0008    .0003        2    .0000    .0000        0        2        0        0        0
 CPMI    83546    .0016    .0014    .0008    .0001        2    .0000    .0000        0        2        0        0        0
 CIEP    83545    .0025    .0004    .0006    .0021        0    .0000    .0000        0        0        0        0        0
 CPMI    83548    .0013    .0011    .0007    .0002        2    .0000    .0000        0        2        0        0        0
 CIEP    83547    .0020    .0004    .0004    .0016        0    .0000    .0000        0        0        0        0        0
 CIEP    83549    .0019    .0006    .0003    .0012        0    .0000    .0000        0        0        0        0        0
 CPMI    83550    .0032    .0012    .0007    .0020        3    .0019    .0000        0        2        0        0        1
                                          ..........
                                          .........
```

Figure 10-12 Performance List report

10.4 Conclusion

Running this scenario, we showed that by analyzing CICS PA reports, a system programmer can deduce how different APIs are used by the CTG client application. In our case, an application change can be suggested that affects a certain performance improvement by using extended ECI calls. Of course, the reason extended ECI calls were not used in the first place was to prevent tying up CICS recoverable resources for the full duration of an extended unit of work.

11

CICS Web Support and 3270 Bridge

This chapter presents a brief overview of the CICS Web Support and the 3270 Bridge interface. It shows how CICS PA can help you to tune the interface by deciding on an appropriate setting of the SOCKETCLOSE parameter on the TCPIPSERVICE definition. This value specifies if, and for how long, CICS should wait before closing the socket, after issuing a receive for incoming data on that socket. For more information about the SOCKETCLOSE parameter and the various setting options, refer to the *CICS Transaction Server for z/OS CICS Resource Definition Guide*, SC34-5990.

Note: This scenario was used to provide a situation that allows us to demonstrate the use of CICS PA reports. The CICS regions were not necessarily tuned for peak performance. In some cases, they had a high level of tracing active. Therefore, these scenarios and the results provided are for demonstration purposes only. They do not provide definitive results for a customer environment.

11.1 CICS Web Support overview

CICS Web Support enables Web browsers to communicate directly with mainframe CICS application programs without an intermediate gateway or a separate Web server. When an end user selects a CICS Web Support Uniform Resource Locator (URL) from a browser window, the request is sent to CICS over TCP/IP using the HTTP protocol. In first instance, the request is accepted by a CICS internal control task which attaches a task to analyze the request as presented in the URL. The name of this attached task is CWXN by default but can be changed. Under control of the CWXN transaction, the appropriate application to be run is determined and an alias transaction is attached to run the application. The default name of the alias transaction is CWBA.

You can use a special CICS-provided application program, DFHWBTTA, to invoke a 3270 transaction in a 3270 Bridge environment. Thus the CICS Web Support exploits the capabilities of the bridge service to allow existing 3270-based transactions to be driven from the Web.

Figure 11-1 shows a general overview of this process. A Web request is initially taken by the Socket Listener task CSOL, which attaches the CWXN transaction to analyze the request. The requested user application program is LINKed to under control of the subsequently attached alias transaction CWBA. If the user application program to be executed is the CICS provided program DFHBWTTA, then the requested 3270 transaction is processed under a separately attached transaction that runs in a bridge environment.

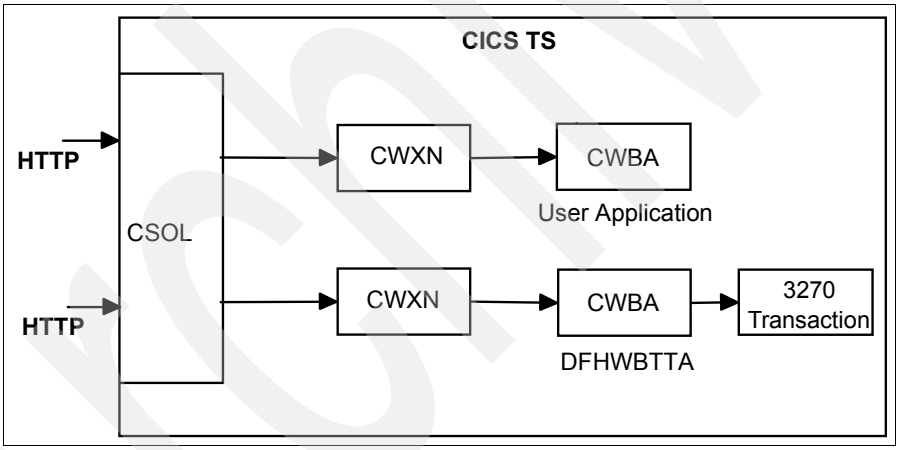

Figure 11-1 Basic CICS Web Support transaction flow

11.2 Scenario description

For the purposes of this section, we did not use a tool to provide heavy workload. It is sufficient to run a few Web requests to show the possibilities of reporting with CICS PA.

We used two CICS systems, one CICS TS V1.3 system, SCSCPAA6, and one CICS TS V2.2 system, SCSCPJA6. Both ran on the same z/OS system so that they used the same IP address, 9.12.6.29. For SCSCPAA6, we defined that it is listening on port 8080 as you can see in the TCPIPSERVICE definition shown in Figure 11-2. Note also that the SOCKETCLOSE time is 20 seconds, which means that the socket stays open for 20 seconds to wait for another incoming requests after some data was received.

```
OBJECT CHARACTERISTICS                                    CICS RELEASE = 0530
 CEDA  View TCpipservice( HTTPNSSL )
  TCpipservice   : HTTPNSSL
  Group          : PAA6WEB
  Description    : CICS Web TCPIPSERVICE with no SSL support
  Urm            : DFHWBADX
  Portnumber     : 08080              1-65535
  Certificate    :
  STatus         : Open               Open | Closed
  SSl            : No                 Yes | No | Clientauth
  Authenticate   : No                 No | Basic | Certificate | AUTORegister
                                      | AUTOMatic
  TRansaction    : CWXN
  Backlog        : 00005              0-32767
  TSqprefix      :
  Ipaddress      :
  SOcketclose    : 000020             No | 0-240000 (HHMMSS)


                                                   SYSID=PAA6 APPLID=SCSCPAA6
```

Figure 11-2 TCPIPSERVICE definition for SCSCPAA6

For SCSCPJA6, we specified that it was listening on port 8081 and we had SOCKETCLOSE equal to zero. This means that the socket closes immediately, if no more data is available after the first receive. Figure 11-3 shows the TCPIPSERVICE definition for SCSCPJA6.

```
OBJECT CHARACTERISTICS                                    CICS RELEASE = 0620
 CEDA  View TCpipservice( HTTPNSSL )
  TCpipservice   : HTTPNSSL
  GROup          : PJA6HTTP
  DEscription    : CICS Web TCPIPSERVICE with no SSL support
  Urm            : DFHWBADX
  POrtnumber     : 08081              1-65535
  STatus         : Open               Open | Closed
  PRotocol       : Http               Iiop | Http | Eci
  TRansaction    : CWXN
  Backlog        : 00005              0-32767
  TSqprefix      :
  Ipaddress      :
  SOcketclose    : 000000             No | 0-240000 (HHMMSS)
 SECURITY
  SSl            : No                 Yes | No | Clientauth
  Certificate    :
  AUthenticate   : No                 No | Basic | Certificate | AUTORegister
                                      | AUTOMatic
  ATtachsec      :                    Local | Verify
 DNS CONNECTION BALANCING
  DNsgroup       :
  GRPcritical    : No                 No | Yes

                                                   SYSID=PJA6 APPLID=SCSCPJA6
```

Figure 11-3 TCPIPSERVICE definition for SCSCPJA6

11.3 Scenario run

We did not introduce a specific workload. From two workstations, we ran some applications. In SCSCPJA6, we used the following URLs:

- `http://9.12.6.29:8081/cics/cwba/dfhwbtta/CEMT`
- `http://9.12.6.29:8081/cics/cwba/dfhadwb0`

For running applications on SCSCPAA6, we used:

- `http://9.12.6.29:8080/cics/cwba/dfhwbtta/CEMT` and other CICS supplied transactions.
- `http://9.12.6.29:8080/cics/cwba/dfhwbtta/TRAD`
- `http://9.12.6.29:8080/cics/cwba/SHOWAPI`
- `http://9.12.6.29:8080/tradercv/cwba/tradepl`

With this as the starting point, we show you the Transaction Group Report. When a request from a browser comes into the CICS system, the CWXN transaction that handles the request is assigned a transaction group ID. This transaction group ID is used to correlate the transactions that CICS executes for the same incoming work request. You can ask CICS PA to provide a list of transactions that executed in the same group. The Transaction Group option is available on the Report Set screen in the Reports category. We created a new Report Set, called WEB. On the Report Set panel, we selected the **Transaction Group** option and received the screen shown in Figure 11-4. On this screen, we elected to have only those groups that contain more than one record.

```
  File  Systems  Options  Help
--------------------------------------------------------------------------------
                    WEB - Transaction Group Report
Command ===>

System Selection:                          Report Output:
 APPLID . .          +                      DDname . . . . . . . . . TRGP0001
 Image  . . SC66     +                      Print Lines per Page . .      (1-255)
 Group  . .          +

Processing Options:
 1  1. Groups of more than one record
    2. Groups of a single record
    3. All Groups

Report Format:
 Title  . . Grouping Web transactions


Selection Criteria:
    Performance
```

Figure 11-4 Transaction group processing options

We returned to the Report Set panel and ran the Web report. The beginning of the report is shown in Figure 11-5.

```
V1R3M0                                                CICS Performance Analyzer
                                                           Transaction Group
                                                 ____________________________________________
TRGP0001 Printed at 13:20:10 11/06/2003 Data from 10:07:11 11/05/2003 to 12:22:37 11/05/2003                          Page       1
Grouping Web transactions

                           Brdg   Client        Request                          Fcty  Conn                R              Response
Tran Userid   SC Origin     Tran IP Address       Type   Program  Term LUName   T/Name Name APPLID     Task T  Stop Time    Time

CSOL CICSUSER U  NONE                            AP:     DFHSOL                              SCSCPAA1      3 D 10:38:39.08  1887.52
CSOL CICSUSER U  NONE                            AP:     DFHSOL                              SCSCPAA1      3 D 11:10:06.51  1887.43
CSOL CICSUSER U  NONE                            AP:     DFHSOL                              SCSCPAA1      3 D 11:41:34.00  1887.48
CSOL CICSUSER U  NONE                            AP:     DFHSOL                              SCSCPAA1      3 D 12:13:01.39  1887.39

CSOL CICSUSER U  NONE                            AP:     DFHSOL                              SCSCPAA6      3 D 11:38:27.34  1887.74
CSOL CICSUSER U  NONE                            AP:     DFHSOL                              SCSCPAA6      3 D 12:09:54.74  1887.40

CWXN CICSUSER U  SOCKET          9.24.104.192    AP:     DFHWBXN                             SCSCPAA6     33 T 11:10:45.59  61.7739
CWBA CICSUSER U  WEB             9.24.104.192    AP:     SHOWAPI                             SCSCPAA6     37 T 11:09:53.34    .4741
CWBA CICSUSER U  WEB             9.24.104.192    AP:     SHOWAPI                             SCSCPAA6     38 T 11:09:57.61   2.1170
CWBA CICSUSER U  WEB             9.24.104.192    AP:                                         SCSCPAA6     39 T 11:10:13.82    .0935
CWBA CICSUSER U  WEB             9.24.104.192    AP:                                         SCSCPAA6     40 T 11:10:16.00    .0645
TRAD CICSUSER TO BRIDGE     CWBA                 AP:     TRADERPL }AAB }AAB     B/}AAB       SCSCPAA6     42 T 11:10:23.71    .6916
CWBA CICSUSER U  WEB             9.24.104.192    AP:     DFHWBTTA                            SCSCPAA6     41 T 11:10:23.71    .6934
TRAD CICSUSER TP BRIDGE     CWBA                 AP:     TRADERPL }AAB }AAB     B/}AAB       SCSCPAA6     44 T 11:10:25.48    .0105
```

Figure 11-5 Default Transaction Group output

We concentrate on the Origin column in this example. This column gives the origin type from the SMF Transaction flags field, a string of 64 bits used for signaling transaction definition and status information. The values we are interested in are SOCKET, WEB and BRIDGE. To create a report with only transactions with one of those three types of origin, we again selected the **Transaction Group** option and selected the **Performance** selection criteria where we entered the selection to have only those records with ORIGIN is equal to WEB, SOCKET or BRIDGE as shown in Figure 11-6.

```
 File  Edit  Object Lists  Options  Help
 ------------------------------------------------------------------------------
                     WEB - Performance Select Statement      Row 1 of 4 More: >
 Command ===>                                                  Scroll ===> CSR

         Active  --------------- Report Interval ----------------
    Inc  Start   -------- From ---------  --------- To ----------
    Exc  Stop    MM/DD/YYYY  HH:MM:SS.TH  MM/DD/YYYY  HH:MM:SS.TH


 ------------------------------------------------------------------------------

    Inc  Field            --- Value or Range ---   Object
 /  Exc  Name +    Type   Value/From   To          List +
    INC  ORIGIN           WEB
    INC  ORIGIN           SOCKET
    INC  ORIGIN           BRIDGE

 ********************************** End of list **********************************
```

Figure 11-6 Transaction Group Selection criteria

After we ran the report again, we received the report shown in Figure 11-7.

```
 V1R3MO                                          CICS Performance Analyzer
                                                     Transaction Group
                                                 ____________________________________________
TRGP0001 Printed at 16:26:12 11/06/2003 Data from 11:09:43 11/05/2003 to 12:22:19 11/05/2003                        Page       1
Grouping Web transactions

                          Brdg   Client        Request                        Fcty  Conn                R             Response
Tran Userid   SC Origin   Tran IP Address       Type   Program  Term LUName   T/Name Name APPLID     Task T  Stop Time    Time

CWXN CICSUSER U  SOCKET         9.24.104.192    AP:     DFHWBXN                           SCSCPAA6     33 T 11:10:45.59  61.7739
CWBA CICSUSER U  WEB            9.24.104.192    AP:     SHOWAPI                           SCSCPAA6     37 T 11:09:53.34    .4741
CWBA CICSUSER U  WEB            9.24.104.192    AP:     SHOWAPI                           SCSCPAA6     38 T 11:09:57.61   2.1170
CWBA CICSUSER U  WEB            9.24.104.192    AP:                                       SCSCPAA6     39 T 11:10:13.82    .0935
CWBA CICSUSER U  WEB            9.24.104.192    AP:                                       SCSCPAA6     40 T 11:10:16.00    .0645
CWBA CICSUSER U  WEB            9.24.104.192    AP:     DFHWBTTA                          SCSCPAA6     41 T 11:10:23.71    .6934
TRAD CICSUSER TO BRIDGE     CWBA                AP:     TRADERPL }AAB }AAB     B/}AAB     SCSCPAA6     42 T 11:10:23.71    .6916
CWBA CICSUSER U  WEB            9.24.104.192    AP:     DFHWBTTA                          SCSCPAA6     43 T 11:10:25.48    .0120
TRAD CICSUSER TP BRIDGE     CWBA                AP:     TRADERPL }AAB }AAB     B/}AAB     SCSCPAA6     44 T 11:10:25.48    .0105

CWXN CICSUSER U  SOCKET         9.24.104.192    AP:     DFHWBXN                           SCSCPAA6     45 T 11:14:11.37  52.5189
CWBA CICSUSER U  WEB            9.24.104.192    AP:     DFHWBTTA                          SCSCPAA6     46 T 11:13:18.86    .0135
CEMT CICSUSER TO BRIDGE     CWBA                AP:     DFHEMTP  }AAC }AAC     B/}AAC     SCSCPAA6     47 T 11:18:51.80  332.947
CWBA CICSUSER U  WEB            9.24.104.192    AP:     DFHWBTTA                          SCSCPAA6     48 T 11:13:30.65    .0175
CWBA CICSUSER U  WEB            9.24.104.192    AP:     DFHWBTTA                          SCSCPAA6     49 T 11:13:36.34    .0165
CWBA CICSUSER U  WEB            9.24.104.192    AP:     DFHWBTTA                          SCSCPAA6     50 T 11:13:37.60    .0171
CWBA CICSUSER U  WEB            9.24.104.192    AP:     DFHWBTTA                          SCSCPAA6     51 T 11:13:38.68    .0170
CWBA CICSUSER U  WEB            9.24.104.192    AP:     DFHWBTTA                          SCSCPAA6     52 T 11:13:39.52    .0181
CWBA CICSUSER U  WEB            9.24.104.192    AP:     DFHWBTTA                          SCSCPAA6     53 T 11:13:40.25    .0169
CWBA CICSUSER U  WEB            9.24.104.192    AP:     DFHWBTTA                          SCSCPAA6     55 T 11:13:51.34    .0176

CWXN CICSUSER U  SOCKET         9.24.104.153    AP:     DFHWBXN                           SCSCPAA6     57 T 12:09:38.24  40.0885
CWBA CICSUSER U  WEB            9.24.104.153    AP:     SHOWAPI                           SCSCPAA6     58 T 12:08:58.49    .3335
CWBA CICSUSER U  WEB            9.24.104.153    AP:     SHOWAPI                           SCSCPAA6     59 T 12:09:11.52   1.8444
CWBA CICSUSER U  WEB            9.24.104.153    AP:     SHOWAPI                           SCSCPAA6     60 T 12:09:17.81    .1636

CWXN CICSUSER U  SOCKET         9.24.104.153    AP:     DFHWBXN                           SCSCPAA6     61 T 12:10:03.14  20.4129
CWBA CICSUSER U  WEB            9.24.104.153    AP:     SHOWAPI                           SCSCPAA6     62 T 12:09:42.93    .1986
.
.
CWXN CICSUSER U  SOCKET         9.24.104.153    AP:     DFHWBXN                           SCSCPJA6  28402 T 12:10:08.92    .0626
CWBA CICSUSER U  WEB            9.24.104.153    AP:     DFHADWB1                          SCSCPJA6  28405 T 12:10:08.92    .0024

CWXN CICSUSER U  SOCKET         9.24.104.153    AP:     DFHWBXN                           SCSCPJA6  28403 T 12:10:08.92    .0264
CWBA CICSUSER U  WEB            9.24.104.153    AP:     DFHADWB1                          SCSCPJA6  28404 T 12:10:08.92    .0018

CWXN CICSUSER U  SOCKET         9.24.104.153    AP:     DFHWBXN                           SCSCPJA6  28407 T 12:10:08.96    .0035
CWBA CICSUSER U  WEB            9.24.104.153    AP:     DFHADWB1                          SCSCPJA6  28408 T 12:10:08.96    .0016

CWXN CICSUSER U  SOCKET         9.24.104.192    AP:     DFHWBXN                           SCSCPJA6  29578 T 12:12:23.06    .0287
CWBA CICSUSER U  WEB            9.24.104.192    AP:     DFHWBTTA                          SCSCPJA6  29579 T 12:12:23.06    .0186
CEMT CICSUSER TO BRIDGE     CWBA                AP:     DFHEMTP  }AAB }AAB     B/}AAB     SCSCPJA6  29580 T 12:13:23.28  60.2362
.
.
 V1R3MO                                          CICS Performance Analyzer
                                                Transaction Group - Summary
                                                 ____________________________________________
TRGP0001 Printed at 16:26:12 11/06/2003 Data from 11:09:43 11/05/2003 to 12:22:19 11/05/2003                        Page       9
Grouping Web transactions

  Origin                    Average    Average    Average    Average    Average    Average    Average    Average    Average
   Type      Transactions   Response   Dispatch   CPU Time   Suspend   DispWait    IR Wait   RMI Susp    FC Wait    SO Wait

BRIDGE              23       72.969       .000       .000       .073       .000       .000       .000       .000       .000
SOCKET              99        5.277       .000       .000       .005       .000       .000       .000       .000       .005
WEB                164         .148       .000       .000       .000       .000       .000       .000       .000       .000
------------   --------   --------   --------   --------   --------   --------   --------   --------   --------
TOTAL              286        7.780       .000       .000       .008       .000       .000       .000       .000       .002
*********************************************************** Bottom of Data ***********************************************************
```

Figure 11-7 Transaction group report with only SOCKET, WEB, and BRIDGE

The report starts with the groups of APPLID SCSCPAA6. We see that there are many transactions running in the same group. This is the result of having a socket close time of 20 seconds. If the client sends a `Connection: Keep-alive` HTTP header with a SOCKETCLOSE value of 20 seconds, the socket stays open and every request coming in within 20 seconds

after the last receive is handled by the same CWXN transaction. For the transaction group containing the transactions with task numbers 45 to 55, we see that a CEMT transaction was started in a bridge environment. CWXN is the first transaction in the group. The second transaction is the CWBA transaction with task number 46. This transaction links to program DFHWBTTA that then attaches the CEMT transaction with task number 47. Transactions 47 to 55 represent a conversation with the CEMT transaction. The last receive from the socket resulted in the CWBA transaction with number 55 that ended at 11:13:51.34. Twenty seconds later, at 11:14:22.37, the CWXN transaction ends because of the socket close time of 20 seconds.

For the SCSCPJA6 system, which has a SOCKETCLOSE value equal to zero, we see that the CWXN transaction is ending immediately, resulting in one CWXN and CWBA transaction per incoming request.

At the end of the report, we also receive a summary per origin type.

11.4 Tuning your CICS Web Support environment

This section discusses how you can tune your CICS Web Support environment for better performance.

11.4.1 Storage consumption by CWXN

Authorized program analysis report (APAR) PQ33097 for CICS TS 1.3 explains that the default SOCKETCLOSE(NO) on the TCPIPSERVICE resource definition may lead to MAXTASK or SOS conditions. This APAR changes the default value for the HTTPNSSL TCPIPSERVICE definition in group DFH$SOT from NO to zero.

Let's look at the storage consumption by the CWXN transaction. As a starting point, we use the CICS PA provided sample Report Forms USTORLST and SSTORLST. In the Report Forms screen, you can copy these forms to your own Report Forms data set by putting your cursor under the Samples option and selecting them from the resulting pop-up window. In your private data set, you can change them according to your needs. We decided to add the APPLID. As an example, we show the modified USTORLST in Figure 11-8.

```
  File  Edit  Confirm  Upgrade  Options  Help
--------------------------------------------------------------------------------
                       EDIT LIST Report Form - USTORLST     Row 1 of 14 More: >
Command ===>                                                   Scroll ===> CSR

Description  . . . User (Task) Storage Analysis      Version (VRM): 620

Selection Criteria:
    Performance

   Field
/  Name +    Type     Description
   TRAN               Transaction identifier
   APPLID             CICS Generic APPLID
   TASKNO             Transaction identification number
   STOP      TIMET    Task stop time
   SC24CGET           CDSA GETMAINs below 16MB
   SC24CHWM           CDSA HWM below 16MB
   SC24UGET           UDSA GETMAINs below 16MB
   SC24UHWM           UDSA HWM below 16MB
   SC31CGET           ECDSA GETMAINs above 16MB
   SC31CHWM           ECDSA HWM above 16MB
   SC31UGET           EUDSA GETMAINs above 16MB
   SC31UHWM           EUDSA HWM above 16MB
   EOR                ---------------- End of Report ----------------
   EOX                ---------------- End of Extract ---------------
```

Figure 11-8 Modified USTORLST Report Form

We ran two Performance List reports specifying these form names in the form field on the Performance List Report screen. For the Performance selection criteria, we chose to only have the report for the CWXN transaction. Figure 11-9 shows the result of the run with the USTORLST form.

```
V1R3M0                                          CICS Performance Analyzer
                                                     Performance List
                                   ____________________________________________________
LIST0001 Printed at  8:30:39 11/07/2003    Data from 12:06:56 11/05/2003                          Page       1
Transaction User (Task) Storage Analysis - Detail

 Tran APPLID     TaskNo Stop         SC24CGet SC24CHWM SC24UGet SC24UHWM SC31CGet SC31CHWM SC31UGet SC31UHWM
                        Time
 CWXN SCSCPJA6    26877 12:06:56.546        0        0        0        0        3     5904        2     2064
.
.
 CWXN SCSCPJA6    28402 12:10:08.921        0        0        0        0        3     5904        2     2064
 CWXN SCSCPJA6    28407 12:10:08.964        0        0        0        0        3     5904        2     2064
 CWXN SCSCPAA6       33 11:10:45.585        0        0        0        0       23     5248       17    34848
 CWXN SCSCPAA6       45 11:14:11.365        0        0        0        0       24     5248       17    34848
 CWXN SCSCPAA6       57 12:09:38.235        0        0        0        0        8     5248        7    34848
 CWXN SCSCPAA6       61 12:10:03.137        0        0        0        0        3     5248        3    34848
 CWXN SCSCPAA6       67 12:10:57.185        0        0        0        0        7     5248        7    34848
 CWXN SCSCPJA6    29578 12:12:23.059        0        0        0        0        3     5904        2     2064
 CWXN SCSCPJA6    29647 12:12:31.864        0        0        0        0        4     5904        2     2064
 CWXN SCSCPJA6    29700 12:12:37.290        0        0        0        0        4     5904        2     2064
.
.
```

Figure 11-9 CWXN user storage report

The number of GETMAINs and the high water marks for allocated storage in region SCSCPJA6 for CWXN are almost constant and low. In region SCSCPAA6, these numbers are

greater and related to the number of alias transactions that are attached for this run of CWXN. Figure 11-10 shows the equivalent report for shared storage usage.

```
V1R3M0                                                  CICS Performance Analyzer
                                                             Performance List
                                                 ____________________________________________________
LIST0001 Printed at  8:30:18 11/07/2003    Data from 12:06:56 11/05/2003                                    Page       1
Transaction Shared Storage Analysis - Detail

 Tran APPLID     TaskNo Stop         SC24SGet SC24GShr SC24GShr SC31SGet SC31GShr SC31FShr
                        Time
 CWXN SCSCPJA6    26877 12:06:56.546        0        0        0        2    65536    32768
.
.
 CWXN SCSCPJA6    28402 12:10:08.921        0        0        0        2    65536    32768
 CWXN SCSCPJA6    28407 12:10:08.964        0        0        0        2    65536    32768
 CWXN SCSCPAA6       33 11:10:45.585        0        0        0        9   294912    32768
 CWXN SCSCPAA6       45 11:14:11.365        0        0        0        9   294912    32768
 CWXN SCSCPAA6       57 12:09:38.235        0        0        0        4   131072    32768
 CWXN SCSCPAA6       61 12:10:03.137        0        0        0        2    65536    32768
 CWXN SCSCPAA6       67 12:10:57.185        0        0        0        4   131072    32768
 CWXN SCSCPJA6    29578 12:12:23.059        0        0        0        2    65536    32768
 CWXN SCSCPJA6    29647 12:12:31.864        0        0        0        2    65536    32768
 CWXN SCSCPJA6    29700 12:12:37.290        0        0        0        2    65536    32768
.
.
```

Figure 11-10 CWXN shared storage report

You can see a similar trend here. The number of GETMAINs and storage high water marks are directly related to the number of CWBA transactions and to the SOCKETCLOSE value. Before coming to a conclusion, we should look at the CPU consumption of the CWXN transaction. Again, we used a CICS PA provided sample form, this time CPULST. We modified the USERID field to make it APPLID. Figure 11-11 shows the modified form.

```
  File  Edit  Confirm  Upgrade  Options  Help
--------------------------------------------------------------------------------
                         EDIT LIST Report Form - CPULST       Row 1 of 16 More: >
Command ===>                                                     Scroll ===> CSR

Description  . . . Transaction CPU Analysis          Version (VRM): 620

Selection Criteria:
    Performance

   Field
/  Name +    Type     Description
   TRAN               Transaction identifier
   APPLID             CICS Generic APPLID
   TASKNO             Transaction identification number
   STOP      TIMET    Task stop time
   RESPONSE           Transaction response time
   DISPATCH  TIME     Dispatch time
   CPU       TIME     CPU time
   QRCPU     TIME     CICS QR TCB CPU time
   MSCPU     TIME     CICS TCBs CPU time
   ROCPU     TIME     CICS RO TCB CPU time
   KY8CPU    TIME     CICS Key 8 TCB CPU time
   J8CPU     TIME     CICS J8 TCB CPU time
   L8CPU     TIME     CICS L8 TCB dispatch time
   S8CPU     TIME     CICS S8 TCB CPU time
   EOR                ---------------- End of Report ----------------
```

Figure 11-11 Modified CPULST Report Form

Figure 11-12 shows the result of running a Performance List report with this form.

```
V1R3M0                                                CICS Performance Analyzer
                                                           Performance List
                                                 ____________________________________________
LIST0001 Printed at 11:03:51 11/07/2003    Data from 12:06:56 11/05/2003                                  Page       1
Transaction CICS TCB CPU Analysis - Detail

 Tran APPLID     TaskNo Stop          Response Dispatch User CPU   QR CPU   MS CPU   RO CPU  KY8 CPU   J8 CPU   L8 CPU   S8 CPU
                        Time            Time     Time     Time     Time     Time     Time     Time     Time     Time     Time
 CWXN SCSCPJA6    26877 12:06:56.546    .0248    .0011    .0009    .0006    .0004    .0000    .0000    .0000    .0000    .0000
 CWXN SCSCPJA6    27109 12:07:18.932    .0283    .0012    .0010    .0006    .0004    .0000    .0000    .0000    .0000    .0000
 CWXN SCSCPJA6    27388 12:07:51.458    .0148    .0011    .0009    .0006    .0003    .0000    .0000    .0000    .0000    .0000 .
.
 CWXN SCSCPJA6    28402 12:10:08.921    .0626    .0009    .0007    .0004    .0003    .0000    .0000    .0000    .0000    .0000
 CWXN SCSCPJA6    28407 12:10:08.964    .0035    .0009    .0008    .0005    .0003    .0000    .0000    .0000    .0000    .0000
 CWXN SCSCPAA6       33 11:10:45.585  61.7739    .0527    .0079    .0049    .0030  Missing  Missing    .0000    .0000    .0000
 CWXN SCSCPAA6       45 11:14:11.365  52.5189    .0066    .0056    .0049    .0007  Missing  Missing    .0000    .0000    .0000
 CWXN SCSCPAA6       57 12:09:38.235  40.0885    .0033    .0028    .0022    .0005  Missing  Missing    .0000    .0000    .0000
 CWXN SCSCPAA6       61 12:10:03.137  20.4129    .0033    .0017    .0013    .0004  Missing  Missing    .0000    .0000    .0000
 CWXN SCSCPAA6       67 12:10:57.185  29.4945    .0030    .0022    .0020    .0002  Missing  Missing    .0000    .0000    .0000
 CWXN SCSCPJA6    29578 12:12:23.059    .0287    .0012    .0011    .0006    .0004    .0000    .0000    .0000    .0000    .0000
 CWXN SCSCPJA6    29647 12:12:31.864    .0259    .0011    .0009    .0006    .0003    .0000    .0000    .0000    .0000    .0000
 CWXN SCSCPJA6    29700 12:12:37.290    .0221    .0012    .0009    .0006    .0003    .0000    .0000    .0000    .0000    .0000
.
.
```

Figure 11-12 CWXN CPU consumption report

This report also shows longer response times for the SCSCPAA6 region because the socket does not close immediately. The value of the response time is dependent on the activity on the socket. The socket stays open for listening as long as requests come in within 20 seconds after the last receive. For SCSCPJA6, the response is dependent on the handling of a single request. Looking at the total CPU consumption, we see that the CPU time is relatively low. Most CPU time is used on the QR TCB, although some is spent on the SO TCB to handle the socket request. This CPU time is reported in the Miscellaneous CPU time field.

11.5 Conclusion

Since CPU time is not directly involved, tuning your CICS Web Support environment means that you need to find an optimum balance. You need to find it between the number of CWXN transactions that you allow to exist concurrently and the storage they occupy. You also need to consider the overhead of starting a new CWXN transaction each time.

12

Java applications in CICS

This chapter compares the performance of a sample CICS-provided Java application in an environment of resettable Java Virtual Machine (JVM) to its performance in an environment of a non-resettable JVM. It also demonstrates the performance advantages of using sharable application classpaths.

Note: The scenarios were used to provide situations that allow us to demonstrate the use of CICS Performance Analyzer (PA) reports. The CICS regions were not necessarily tuned for peak performance. In some cases, they had a high level of tracing active. Therefore, you should see these scenarios and the results provided for demonstration purposes only. They do not provide definitive results for a customer environment.

12.1 CICS and Java

You can write Java application programs that use CICS services and execute under CICS control. CICS Transaction Server (TS) V2.2 supports three programming models. All three models are supported by the new Persistent Reusable JVM that executes under CICS control.

12.1.1 Java language programs in CICS

CICS TS provides a Java class library called JCICS that covers many functions of the traditional EXEC CICS programming interface. The class library is shipped in a dfjcics.jar file. You can download it to your workstation for use in an Integrated Development Environment (IDE), such as WebSphere Studio Application Developer (WSAD). JCICS allows you to access CICS resources such as VSAM files, CICS transient data, and temporary storage queues. It also allows you to invoke other CICS programs and transactions.

Although these CICS Java programs run in a JVM environment, you invoke them the same way as other CICS programs written in procedural languages. You can invoke them as initial programs of a transaction through a transaction definition, through an EXEC CICS LINK or EXEC CICS XCTL with or without a COMMAREA, as a program that executes an EXEC CICS START TRANSACTION request, through APPC, through transient data queue triggering mechanism, and by all other available traditional means.

CICS TS V1.3 introduced CICS support of the Java language and the JCICS class library. they were further enhanced in CICS TS 1.3 by authorized program analysis report (APAR) PQ34321 to provide SQLJ and JDBC access to DB2 relational database.

12.1.2 Stateless CORBA objects

Stateless CORBA objects are Java server applications that are invoked by a client application using the Internet Inter-ORB Protocol (IIOP). No state is maintained in object attributes between successful invocation of methods.

Inbound CORBA object communication was introduced in CICS TS V1.3. In CICS TS V2.2, CORBA objects can also make outbound IIOP calls. Therefore, they can behave as a client or as a server within the scope of an Object Transaction Service (OTS) distributed transaction.

Stateless CORBA objects can use JCICS API to interact with CICS.

12.1.3 Enterprise JavaBeans

Enterprise JavaBeans (EJBs) are non-visual server-side components of a distributed transactional application that conform to Sun Microsystem's Enterprise JavaBean Specification. CICS has implemented support for Version 1.1 level of this specification by mapping the interfaces defined in the specification to underlying CICS services.

You can develop Enterprise JavaBeans that use the JCICS class library to access CICS resources or programs directly. However, these applications are not portable to a non-CICS EJB run-time environment.

The EJB specification defines two types of Enterprise JavaBeans:

- **Session beans**: Encapsulate a session between a client and a server component. There are two varieties of session beans:

– *Stateless session beans* behave in a manner similar to Stateless CORBA Objects. That is, state data is not maintained between method invocations. Stateless session bean objects can handle multiple requests from multiple clients so sessions can be pooled. An OTS transaction cannot span though method invocations.

– *Stateful session beans* support multiple consecutive method invocations originating from the same client. The state data is maintained between method invocations. The bean object exists for the duration of a single client/server session and an OTS transaction can span multiple method invocations.

CICS fully supports both types of session beans. It is important to understand that a method invocation for both types of session beans maps to one CICS transaction, so the system behavior in both cases conforms to the CICS pseudo-conversational programming model.

- **Entity beans**: Usually encapsulate access to relational data. Entity beans are not supported by CICS TS. Relational data that usually resides in a local DB2 database can be accessed through JDBC or SQLJ interfaces.

Refer to Chapter 13, “Enterprise JavaBeans in CICS” on page 285, for further discussion.

12.2 Scenario description

This scenario uses the CICS-provided sample transaction that accesses a temporary storage queue. This sample shows how to use the TSQ class. It consists of a single transaction, JTS1, which invokes a single Java class, TSQ.ClassOne. It also uses an auxiliary temporary storage queue. Refer to *CICS Transaction Server for z/OS Java Applications in CICS*, SC34-6000, which fully describes how to generate, set up and run this sample TSQ application.

Because the sample application uses only one single Java class, we found it necessary to download the application to a workstation and repackage it by adding one more class to the source of the program. We added the instantiation of the second class. This addition did not change anything in the execution logic of the sample program, but simply caused two classes to be loaded in the JVM instead of one. You can run the sample program DFJ$JTS1 by using the transaction code of JTS1. All definitions are provided by CICS in the DFH$JVM CSD group.

To run a Java program in a JVM environment, you need a PROGRAM definition that specifies this program to be a JVM program (JVM set to `YES`). You must also specify the name of the application class in the JVMCLASS parameter and point to a JVM properties file in the JVMPROFILE parameter. Figure 12-1 shows the relevant parameters from the DFH$JTS1 PROGRAM definition.

```
OBJECT CHARACTERISTICS                                      CICS RELEASE = 0620
  CEDA  View PROGram( DFJ$JTS1 )
+  REMOTEName     :
   Transid        :
   EXECUtionset   : Fullapi            Fullapi | Dplsubset
  JVM ATTRIBUTES
   JVM            : Yes                No | Yes
   JVMClass       : examples.TSQ.ClassOne
                  :
                  :
                  :
                  :
   JVMProfile     : DFHJVMPR
  JAVA PROGRAM OBJECT ATTRIBUTES
   Hotpool        : No                 No | Yes


                                                  SYSID=PJA6 APPLID=SCSCPJA6
```

Figure 12-1 DFH$JTS1 PROGRAM definition

The JVMPROFILE parameter specifies the name of the profile that CICS is to use to provide the JVM characteristics. The profile is located as a member of a partitioned data set with DD-name DFHJVM. In this member, the three important parameters to check for this test are:

- **JVMPROPS**: Specifies the full path of the system properties file that resides in hierarchical file system (HFS) and that CICS is to use when creating a JVM. On our system, we have: JVMPROPS=`/u/cicsts22/props/scscpj##/dfjjvmpr.props`.
- **CLASSPATH**: Specifies the path to user applications. On our system, we have: CLASSPATH=`/u/cicsls/:/usr/lpp/cicsts/cicsts22/samples`.
- **Xresettable**: Specifies whether the JVM is eligible to be reused again for execution of other suitable JVM programs. In our test, we run with Xresettable=`NO` and Xresettable=`YES`.

We specify only the ibm.jvm.shareable.application.class.path property for this test, from the HFS jvm.properties file. If you use only the CLASSPATH in the profile in the DFHJVM data set, classes are reloaded from their HFS location each time the JVM is reused. Defining classes in the ibm.jvm.shareable.application.class.path system property provides additional optimization by caching the classes in the JVM. On our system, we have:

```
ibm.jvm.shareable.application.class.path=/u/cicsls/work/:/u/cicsls/samples/dfjcics/
```

Finally, there is one CICS system initialization parameter to be mentioned. MAXJVMTCBS specifies the maximum number of open task control blocks (TCBs) that CICS can create for use by JVM programs. We decided to run with the default value of 5.

In this test, we plan to perform three runs. A first run is with the Xresettable parameter set to `NO` so that for every JVM program execution, a new JVM has to be initialized. The second run should show the difference when running with Xresettable set to `YES` so that the JVM is initialized once and reused afterwards. During this run, we do not specify the ibm.jvm.shareable.application.class.path property. In the last run, we use cached classes by specifying the ibm.jvm.shareable.application.class.path property.

We used Teleprocessing Network Simulator (TPNS) to generate the workload for CICS. Fifty terminals were simulated that always start one and the same transaction. When transaction output is received, immediately a new transaction run was requested. The intention was to run the workload for about 15 minutes and take a sample of five minutes from the middle of the run.

12.3 Measuring JVM performance

This section compares the transaction performance in resettable and non-resettable JVM environment.

12.3.1 Xresettable=NO

After the SMF data sets were switched, we ran the Take-up facility on the SMF file. In CICS Performance Analyzer Primary Option Menu, we chose 1 to go to the Systems Definitions screen. On the Systems Definitions screen, we chose option 4 for the Take-up function. On the resulting screen, we entered the SMF records data set name and submitted the batch job. Figure 12-2 shows output from the take-up job.

```
V1R3M0    17:02:50 10/14/2003                          CICS Performance Analyzer                                  Page      1
                                                           Take-up from SMF
                                                           ________________
CPA2012I  Processing started for SMF file SMFIN001
CPA2017I  SMF records for System SC66 start at 10/14/2003 10:49:44.74
CPA2015I  DB2 Accounting record found, DB2 SSID=D7Q2 Release=7.1
CPA2014I  CMF record for CICS system found, APPLID=SCSCPAA1 Release=5.3.0
CPA2014I  CMF record for CICS system found, APPLID=SCSCPTA1 Release=5.3.0
CPA2014I  CMF record for CICS system found, APPLID=SCSCPTA2 Release=5.3.0
CPA2016I  MVS System Logger record found, System=SC66LOGR
CPA2014I  CMF record for CICS system found, APPLID=SCSCPJA6 Release=6.2.0
CPA2014I  CMF record for CICS system found, APPLID=SCSCLSA5 Release=6.2.0
CPA2014I  CMF record for CICS system found, APPLID=SCSCPLA1 Release=6.2.0
CPA2014I  CMF record for CICS system found, APPLID=SCSCPJA7 Release=6.2.0
CPA2014I  CMF record for CICS system found, APPLID=SCSCPLA2 Release=6.2.0
CPA2014I  CMF record for CICS system found, APPLID=SCSCPAME Release=6.2.0
CPA2013I  Processing ended for SMF file SMFIN001 - 11 system(s) found
CPA2000I  Take-up processing has completed, RC=0
```

Figure 12-2 Take-up output

Figure 12-3 shows the result of the take-up job on the Systems Definition screen. Because of the mix of systems and the amount of data, we decided to create a new data set containing only the records we were interested in. We used CICS PA Record Selection to do this.

On the Main Options screen, we selected 2 to go to the Report Sets screen. On the command line, we entered `NEW JVM` to create a new Report Set. We selected **Record Selection** in the Report category.

```
  File  Edit  Filter  View  Options  Help
--------------------------------------------------------------------------------
                              System Definitions                Row 1 from 16
Command ===>                                                  Scroll ===> CSR

Select a System to edit its definition, SMF Files and Groups.
                                                                  SMF Files
/   System   Type     Image                Description            System
    SCSCPJA6 CICS              used for creating allfields        SCSCPJA6
    SCSCPJA6 CICS              DFHAPPL EMP usage                  SCSCPJA6
    SCSCPJA6 CICS              EMP testing                        SCSCPJA6
    SCSCLSA5 CICS              JTS1 testing                       SCSCLSA5
    SCSCLSA5 CICS              JVM testing                        SCSCLSA5
    SCSCPJA6 CICS              used for export function           SCSCPJA6
    SC66     Image             System added by take-up            SC66
    D7Q2     DB2      SC66     System added by take-up            SC66
    SCSCPAA1 CICS     SC66     System added by take-up            SC66
    SCSCPTA1 CICS     SC66     System added by take-up            SC66
    SCSCPTA2 CICS     SC66     System added by take-up            SC66
    SC66LOGR Logger   SC66     System added by take-up            SC66
    SCSCPJA6 CICS     SC66     System added by take-up            SC66
    SCSCLSA5 CICS     SC66     System added by take-up            SC66
    SCSCPLA1 CICS     SC66     System added by take-up            SC66
```

Figure 12-3 System added by the Take-up function

On the Report Selection Extract screen, we entered the APPLID and Image name as found during the take-up. We also entered the data set name that had to contain the subset of the SMF records, CICSLS2.JVM.FIRST.RUN, and specified 1 for the disposition to create a new data set. Since we planned to copy only records for transaction JTS1, we entered S next to the Performance selection criteria. Figure 12-4 shows the screen with its input.

```
  File  Systems  Options  Help
--------------------------------------------------------------------------------
                        JVM - Record Selection Extract
Command ===>

System Selection:
 CICS APPLID . . SCSCPJA6  +  Image . .          +  Group . .          +
 DB2 SSID  . . .       +      Image . .          +  Group . .          +
 MQ SSID . . . .       +      Image . .          +  Group . .          +

Extract Recap:
 DDname  . . . RSEL0001

Output Data Set:
 Data Set Name  . . 'CICSLS2.JVM.FIRST.RUN'
 Disposition  . . . 1  1. OLD   2. MOD   (If cataloged)

Selection Criteria:
 s  Performance
```

Figure 12-4 Record selection: Defining the data set name

On the Performance Select Statement screen (Figure 12-5), we entered the field name TRAN and its value of JTS1. We also entered I to include this selection.

```
  File  Edit  Object Lists  Options  Help
--------------------------------------------------------------------------------
                    JVM - Performance Select Statement      Row 1 of 3 More: >
Command ===>                                                  Scroll ===> CSR

         Active  --------------- Report Interval ----------------
   Inc   Start   -------- From ---------  --------- To ----------
   Exc   Stop    MM/DD/YYYY  HH:MM:SS.TH  MM/DD/YYYY  HH:MM:SS.TH


--------------------------------------------------------------------------------

   Inc  Field             --- Value or Range ---   Object
/  Exc  Name +    Type    Value/From   To          List +

   INC  TRAN              JTS1
```

Figure 12-5 Record selection: Transaction ID selection

We submitted the batch job. Figure 12-6 shows the result.

```
V1R3M0    17:22:05 10/14/2003                    CICS Performance Analyzer                                  Page     4
                                                 End of File Record Counts
                                 ____________________________________________________
                         DDname    RecID          Record Type          Count     Pct of Total
                        SMFIN001   X'30'     Performance Dictionary          2         0.01%
                                   X'31'     Performance Class           7,012        21.07%
                                   X'51'     CICS Statistics            17,954        53.95%
                                   X'58'     MVS System Logger           2,052         6.17%
                                   X'65'     DB2 Accounting              6,257        18.80%
                        SMFIN001   Total                                33,277       100.00%
                                   Total     SMF Records                 9,270



V1R3M0                                           CICS Performance Analyzer
                                                   Record Selection Extract
                                 ____________________________________________
RSEL0001 Printed at 17:21:48 10/14/2003     Data from 12:48:55 10/14/2003 to 16:00:30 10/14/2003                Page       1


CPAORS01 Extract has completed successfully
         Data Set Name   . . . . . CICSLS2.JVM.FIRST.RUN
         Record Counts:
           Performance Dictionary  .          0
           Performance Class     . .        338
           DB2 Accounting  . . . . .          0
           SMF Records . . . . . .           18
```

Figure 12-6 Record selection batch job output

From now on, we use the data set CICSLS2.JVM.FIRST.RUN to produce our reports. We returned to the System Definitions screen where we selected our system entry to change the name of the SMF data set to the new data set that contains our subset of records. We easily selected the new data set name from the list of SMF data sets since its name was added to the list of SMF data sets by the Record Selection function.

Before running the first report, we chose a Report Form. We chose to use the CICS PA provided sample forms that are related to JVM. To bring these to our forms data set, on the CICS PA Primary Option Menu, we chose option 3 to go to the Report Forms screen. On this screen, we moved the cursor to the action bar under the Samples option and pressed Enter. We selected option 1 to populate the Report Forms data set with the sample forms (see Figure 12-7).

```
Sample Report Forms     Row 1 to 16 of 87
Command ===>                                Scroll ===> CSR

Select one or more Sample Report Forms then press EXIT.

     Name    Type               Description
   ABNDLST   LIST     Transaction Abend List
   ABNDSUM   SUMMARY  Transaction Abend Summary
   BADCPU    LISTX    Top 20 Worst CPU Times
   BADFILE   LISTX    Top 20 Worst File Requests
   BADRESP   LISTX    Top 20 Worst Response Times
   BADRMI    LISTX    Top 20 Worst CICS RMI Times
   BADRMIRQ  LISTX    Top 20 Worst CICS RMI Requests
   BADSUSP   LISTX    Top 20 Worst Suspend Times
   BADTDQ    LISTX    Top 20 Worst Tdqueue Requests
   BADTSQ    LISTX    Top 20 Worst Tsqueue Requests
   BTSACLST  LIST     CICS BTS Activity - Overview
   BTSRQLST  LIST     CICS BTS Request Activity
   BTSRQSUM  SUMMARY  CICS BTS Request Activity
   COMMWLST  LIST     Transaction Comms Wait Analysis
   COMMWSUM  SUMMARY  Transaction Comms Wait Analysis
   CPULEXTR  LIST     CPU Analysis and Extract
```

Figure 12-7 Sample Report Forms pop-up screen

We scrolled down the list and selected the JVMLST and JVMSUM sample forms. We pressed F3 to return to our private Report Forms screen where we saw these forms included in the list.

We first produced the LIST report. We returned back to the Primary Option Menu, where we selected `2` to go the Report Set screen. On the Report Set screen, we entered `NEW JVML` to create a new Report Set. On the EDIT Report Set screen, we entered `S` next to the List option in the category Performance Reports. On the Performance List Report screen (Figure 12-8), we entered the APPLID and image name as generated by the take-up, specified to use the JVMLST Report Form, and entered a report title.

```
  File  Systems  Options  Help
 ------------------------------------------------------------------------------
                      JVML - Performance List Report
 Command ===>

 System Selection:                          Report Output:
  APPLID . . SCSCPJA6  +                     DDname . . . . . . . . . LIST0001
  Image  . . SC66      +                     Print Lines per Page . .      (1-255)
  Group  . .           +

 Report Format:
  Form . . . JVMLST    +
  Title  . . LIST report of JVM related fields


 Selection Criteria:
     Performance
```

Figure 12-8 Performance List Report selections

We returned to the Edit Report Set screen where we ran the List report. We entered the time interval for our report as shown in Figure 12-9 and then submitted the report.

```
  File  Systems  Options  Help
--------------------------------------------------------------------------------
                              Run Report Set JVML
Command ===>

Specify run Report Set options then press Enter to continue submit.

System Selection:
 CICS APPLID . . SCSCPJA6  +  Image . .          +  Group . .          +
 DB2 SSID  . . .       +      Image . .          +  Group . .          +
 MQ SSID . . . .       +      Image . .          +  Group . .          +
 Logger  . . . .           +  Image . .          +  Group . .          +

 /  Override System Selections specified in Report Set

                                          ----- Report Interval ------
Missing SMF Files Option:                     MM/DD/YYYY  HH:MM:SS.TH
1  1. Issue error message                 From 10/14/2003  15:51:00.00
   2. Leave DSN unresolved in JCL         To   10/14/2003  15:56:00.00
   3. Disregard offending reports

Enter "/" to select option
/  Edit JCL before submit
```

Figure 12-9 Time interval selection for JVML report

Figure 12-10 and Figure 12-11 show the Performance List report.

```
 V1R3M0                                        CICS Performance Analyzer
                                                  Performance List
                                   ____________________________________________
LIST0001 Printed at 17:56:50 10/15/2003    Data from 15:51:19 10/14/2003                APPLID SCSCPJA6      Page       1
LIST report of JVM related fields

 Tran Userid     TaskNo Stop          Response Dispatch User CPU  KY8 CPU   J8 CPU JVM Elap JVMITime JVM Meth JVMRTime JVM Susp
                        Time           Time     Time     Time     Time      Time     Time     Time     Time     Time     Time
 JTS1 CICSUSER      307 15:51:19.558  198.766  18.8264   1.8729   1.8716   1.8716  17.4417  16.6208    .8084    .0124    .0172
 JTS1 CICSUSER      308 15:51:19.717  195.381  18.7943   1.8773   1.8758   1.8758  17.3833  16.3878    .9881    .0074    .0222
 JTS1 CICSUSER      309 15:51:20.459  189.346  18.5955   1.8643   1.8630   1.8630  17.1392  16.6369    .4917    .0105    .0144
 JTS1 CICSUSER      310 15:51:20.560  185.339  18.5560   1.8809   1.8797   1.8797  17.1325  16.5823    .5074    .0428    .0084
 JTS1 CICSUSER      311 15:51:25.645  186.436  17.2489   1.8871   1.8858   1.8858  15.9444  15.2213    .6235    .0996    .0108
 JTS1 CICSUSER      313 15:51:40.269  194.343  20.5334   1.8885   1.8872   1.8872  19.9681  19.3774    .5285    .0621    .0186
 JTS1 CICSUSER      312 15:51:41.419  201.444  21.8200   1.9105   1.9090   1.9090  20.2039  19.5438    .6514    .0087    .0410
 JTS1 CICSUSER      314 15:51:41.632  190.767  21.0965   1.8782   1.8765   1.8765  19.7254  18.7686    .9344    .0224    .0773
 JTS1 CICSUSER      315 15:51:41.731  186.423  21.1283   1.9186   1.9170   1.9170  19.8033  18.7711   1.0056    .0265    .0429
 JTS1 CICSUSER      316 15:51:43.324  184.044  17.6670   1.8622   1.8608   1.8608  16.4026  15.7449    .6343    .0235    .0127
 JTS1 CICSUSER      317 15:51:55.924  196.523  15.6437   1.8694   1.8680   1.8680  14.1105  13.3029    .7083    .0993    .0098
 JTS1 CICSUSER      318 15:52:00.314  198.104  18.7562   1.8893   1.8880   1.8880  17.5898  16.9319    .6005    .0574    .1385
 JTS1 CICSUSER      319 15:52:01.796  193.091  20.1463   1.8852   1.8838   1.8838  18.7259  18.2133    .4726    .0400    .0168
 JTS1 CICSUSER      320 15:52:02.648  190.242  20.9007   1.8973   1.8959   1.8959  19.5225  18.7221    .7910    .0095    .0160
 JTS1 CICSUSER      321 15:52:02.794  182.095  19.4540   1.8964   1.8949   1.8949  18.1286  17.2366    .8561    .0359    .0160
 JTS1 CICSUSER      322 15:52:13.307  191.757  17.3557   1.8672   1.8660   1.8660  16.0093  15.1588    .5790    .2716    .0271
.
.
.
```

Figure 12-10 First run: List Report (Part 1 of 2)

```
JTS1 CICSUSER      387 15:55:37.535  183.932  17.1542   1.8810   1.8794   1.8794  15.8741  15.1346    .6775    .0620    .0127
JTS1 CICSUSER      388 15:55:41.597  187.602  16.6716   1.8772   1.8758   1.8758  15.3292  14.6885    .6239    .0168    .0138
JTS1 CICSUSER      389 15:55:47.729  189.853  16.2151   1.8558   1.8544   1.8544  14.9242  14.4298    .4358    .0586    .0120
JTS1 CICSUSER      390 15:55:49.273  186.922  16.8655   1.8569   1.8555   1.8555  15.5751  15.0031    .5564    .0156    .0165
JTS1 CICSUSER      391 15:55:52.618  184.332  16.1689   1.8587   1.8573   1.8573  14.8589  14.1910    .6039    .0641    .0128
JTS1 CICSUSER      392 15:55:54.151  182.893  16.6036   1.8520   1.8506   1.8506  15.1766  14.5631    .5388    .0746    .0119
JTS1 CICSUSER      393 15:55:59.631  186.926  18.0197   1.8999   1.8985   1.8985  16.7013  15.9256    .7128    .0629    .0144
JTS1 CICSUSER      394 15:56:04.432  190.436  16.6919   1.8673   1.8659   1.8659  15.4022  14.7436    .6137    .0448    .0097
JTS1 CICSUSER      395 15:56:06.441  183.840  17.1584   1.8638   1.8624   1.8624  15.8751  15.1374    .6517    .0860    .0089
JTS1 CICSUSER      396 15:56:09.848  185.581  17.2203   1.8671   1.8657   1.8657  15.9127  15.3948    .4740    .0439    .0094
JTS1 CICSUSER      397 15:56:10.633  181.797  16.4699   1.8623   1.8610   1.8610  15.1900  14.6137    .5175    .0588    .0115
JTS1 CICSUSER      398 15:56:16.721  186.388  17.0783   1.8620   1.8606   1.8606  15.7856  14.9937    .7206    .0714    .0106
JTS1 CICSUSER      399 15:56:20.580  188.422  16.1362   1.8612   1.8598   1.8598  14.8551  14.2181    .5970    .0400    .0123
JTS1 CICSUSER      400 15:56:21.516  179.225  15.0624   1.8548   1.8534   1.8534  14.6987  13.8764    .7724    .0500    .0130
JTS1 CICSUSER      401 15:56:28.445  184.477  18.5827   1.8598   1.8585   1.8585  17.1340  16.5087    .5384    .0870    .0133
JTS1 CICSUSER      403 15:56:28.592  182.048  17.9307   1.8610   1.8596   1.8596  16.5542  15.9543    .5597    .0403    .0286
JTS1 CICSUSER      404 15:56:33.464  183.507  16.7237   1.8703   1.8689   1.8689  15.4031  14.6852    .6906    .0272    .0188
JTS1 CICSUSER      405 15:56:42.719  189.712  22.1165   1.8932   1.8916   1.8916  20.7884  19.9099    .8095    .0690    .0229
JTS1 CICSUSER      407 15:56:42.929  181.193  21.3748   1.8951   1.8935   1.8935  20.0321  19.0017    .9169    .1135    .0378
JTS1 CICSUSER      408 15:56:50.585  187.744  22.1169   1.8971   1.8957   1.8957  20.6553  20.0173    .6049    .0331    .0235
JTS1 CICSUSER      409 15:56:50.673  186.527  22.0545   1.8986   1.8971   1.8971  20.7277  20.0106    .7095    .0076    .0246
JTS1 CICSUSER      410 15:56:53.288  187.928  19.8079   1.8883   1.8870   1.8870  18.5421  17.9332    .5782    .0308    .0160
JTS1 CICSUSER      411 15:57:01.354  189.117  18.6154   1.8723   1.8709   1.8709  18.2632  17.6115    .6381    .0135    .0192
```

Figure 12-11 First run: List report (Part 2 of 2)

In a similar way, we created a Report Set JVMS that uses Report Form JVMSUM. On the Report Set screen, we chose the summary instead of the list. The Summary report produced is shown in Figure 12-12.

```
V1R3M0                                                CICS Performance Analyzer
                                                          Performance Summary
                                                 ____________________________________________
SUMM0001 Printed at 18:22:38 10/15/2003     Data from 15:48:00 10/14/2003 to 15:57:01 10/14/2003                    Page       1
SUMMARY report of JVM related fields

                      Avg       Avg      Avg       Avg       Avg       Avg       Avg       Avg       Avg      Avg       Avg       Avg
Tran       #Tasks Response Dispatch User CPU  Suspend DispWait  KY8 CPU   J8 CPU JVM Elap JVMITime JVM Meth JVMRTime JVM Susp
                      Time     Time     Time      Time      Time      Time      Time      Time      Time     Time      Time      Time
JTS1           95  187.091  18.3475   1.8681  168.743    .0037   1.8667   1.8667  17.0962  16.4318    .6062    .0582    .0205
```

Figure 12-12 First run: Summary report

These reports show high values for dispatch time, JVM elapsed time and JVM initialization time and extremely high values for response time. The average times in the summary report are consistent with the individual values in the list report so that not a few deviating individual values impact the average values.

Most of the average JVM initialization time is going into the average JVM elapse time. Most of the average JVM elapse time is going into the average dispatch time so that we can say that the JVM initialization time is determining the dispatch time.

To find an explanation for the extreme high response time, we created a new summary Report Form that we called JVMDSP. We moved most dispatch fields that can give information about dispatch delays before the EOR indicator, as shown in Figure 12-13.

```
  File  Edit  Confirm  Upgrade  Options  Help
--------------------------------------------------------------------------------
                     EDIT SUMMARY Report Form - JVMDSP     Row 1 of 191 More: >
Command ===>                                                   Scroll ===> CSR

Description  . . . Summary Report Form              Version (VRM): 620

Selection Criteria:
    Performance

   Field
/  Name +    S Type    Fn   Description
   TRAN      A              Transaction identifier
   RESPONSE            AVE  Transaction response time
   DISPATCH    TIME    AVE  Dispatch time
   CPU         TIME    AVE  CPU time
   SUSPEND     TIME    AVE  Suspend time
   DSPDELAY    TIME    AVE  First dispatch wait time
   DISPWAIT    TIME    AVE  Redispatch wait time
   MAXJTDLY    TIME    AVE  Maximum JVM TCB delay time
   MAXOTDLY    TIME    AVE  MAXOPENTCBS wait time
   EOR                      ---------------- End of Report ----------------
```

Figure 12-13 Report Form with dispatcher delay fields

When we ran the JVMS Report Set with this form, we received the report shown in Figure 12-14.

```
V1R3M0                                          CICS Performance Analyzer
                                                     Performance Summary
                                          ____________________________________________
SUMM0001 Printed at 10:19:11 10/16/2003     Data from 15:48:00 10/14/2003 to 15:57:01 10/14/2003                    Page       1
SUMMARY report of dispatcher wait fields

             Avg       Avg       Avg       Avg       Avg       Avg       Avg       Avg
Tran     Response Dispatch User CPU  Suspend Disp1Dly DispWait MaxJTDly MaxOTDly
             Time      Time      Time      Time      Time      Time      Time      Time
JTS1      187.091  18.3475    1.8681  168.743    .0001    .0037  168.723    .0000
```

Figure 12-14 First run: Summary report with dispatch delay information

From this report, we see that the first dispatch wait time is almost zero which means that there are no problems for the CICS dispatcher to accept and initiate new entered transactions.

Most of the dispatch delay time is spent on MAXJTDly. This means that we are waiting for a JVM TCB to initialize a new JVM. For a better understanding of what is happening, we decided to make one more list form to print the individual transaction information starting from the beginning of our test run. The form was called JVMBEGIN. It contained the fields that distinguish the individual transactions such as terminal ID and task number plus the dispatch and JVM fields that we were using already. We ran the JVML Report Set with the JVMBEGIN Report Form. In the JVML Report Set, we changed the starting time to the time we started our test run. Figure 12-15 shows the JVMBEGIN Report Form.

```
  File  Edit  Confirm  Upgrade  Options  Help
--------------------------------------------------------------------------------
                       EDIT LIST Report Form - JVMBEGIN    Row 1 of 216 More: >
Command ===>                                                   Scroll ===> CSR

Description  . . . List Report Form                  Version (VRM): 620

Selection Criteria:
    Performance

   Field
/  Name +    Type     Description
   TRAN                Transaction identifier
   TERM                Terminal ID
   TASKNO              Transaction identification number
   START     TIMET     Task start time
   STOP      TIMET     Task stop time
   RESPONSE            Transaction response time
   DISPATCH  TIME      Dispatch time
   DSPDELAY  TIME      First dispatch wait time
   DISPWAIT  TIME      Redispatch wait time
   SUSPEND   TIME      Suspend time
   MAXJTDLY  TIME      Maximum JVM TCB delay time
   JVMITIME  TIME      JVM initialize elapsed time
   JVMTIME   TIME      JVM elapsed time
   JVMSUSP   TIME      JVM suspend time
   EOR                 ---------------- End of Report ----------------
```

Figure 12-15 JVMBEGIN Report Form

Figure 12-16 and Figure 12-17 show the resulting list report.

```
V1R3M0                                          CICS Performance Analyzer
                                                     Performance List
                                                 ____________________________________________
LIST0001 Printed at 14:16:12 10/16/2003    Data from 15:41:49 10/14/2003          APPLID SCSCPJA6      Page       1
LIST report of JVM related fields
```

Tran	Term	TaskNo	Start Time	Stop Time	Response Time	Dispatch Time	Disp1Dly Time	DispWait Time	Suspend Time	MaxJTDly Time	JVMITime Time	JVM Elap Time	JVM Susp Time
JTS1	<ATJ	103	15:41:59.761	15:42:15.790	16.0285	16.0173	.0000	.0015	.0112	.0000	14.1832	14.7076	.0111
JTS1	<AY1	105	15:42:00.746	15:42:18.238	17.4924	17.4778	.0000	.0018	.0146	.0000	15.5917	16.1565	.0142
JTS1	<ATK	107	15:42:01.748	15:42:20.945	19.1964	19.1788	.0000	.0026	.0176	.0000	17.3058	17.8617	.0167
JTS1	<AY2	109	15:42:02.757	15:42:21.786	19.0292	19.0186	.0000	.0013	.0106	.0000	17.2687	17.7436	.0104
JTS1	<ATL	111	15:42:03.762	15:42:22.875	19.1138	19.0988	.0000	.0016	.0150	.0000	17.9410	18.7526	.0148
JTS1	<AY3	113	15:42:04.758	15:42:33.262	28.5035	17.4765	.0000	.0020	11.0270	11.0013	15.5605	16.1583	.0251
JTS1	<ATM	115	15:42:05.758	15:42:33.916	28.1582	15.7007	.0000	.0012	12.4576	12.4488	13.9661	14.3831	.0087
JTS1	<AY4	117	15:42:06.760	15:42:37.523	30.7634	16.5983	.0000	.0019	14.1652	14.1542	14.5251	15.1652	.0103
JTS1	<ATN	119	15:42:07.748	15:42:40.135	32.3870	18.3713	.0000	.0014	14.0157	14.0056	16.4651	16.9884	.0099
JTS1	<AY5	121	15:42:08.756	15:42:43.358	34.6024	20.5058	.0000	.0036	14.0965	14.0826	18.3485	18.9835	.0126
JTS1	<ATO	123	15:42:09.763	15:42:52.729	42.9667	19.4886	.0000	.0013	23.4780	23.4680	17.4390	18.2016	.0098
JTS1	<AY6	125	15:42:10.757	15:42:52.985	42.2277	19.0774	.0000	.0021	23.1502	23.1326	17.0032	17.7249	.0171
JTS1	<ATP	127	15:42:11.759	15:42:55.666	43.9066	18.1683	.0000	.0007	25.7383	25.7276	16.1772	16.8472	.0104
JTS1	<AY7	129	15:42:12.759	15:42:57.271	44.5112	17.1444	.0000	.0044	27.3668	27.3490	15.1047	15.6631	.0172
JTS1	<ATQ	131	15:42:13.766	15:43:05.644	51.8780	22.3815	.0000	.0012	29.4966	29.4853	20.2288	20.9829	.0111
JTS1	<AY8	133	15:42:14.761	15:43:09.838	55.0773	17.1266	.0000	.0013	37.9507	37.9373	15.3727	15.8300	.0133
JTS1	<ATR	135	15:42:15.770	15:43:10.282	54.5118	17.3224	.0000	.0011	37.1894	37.1807	15.2967	15.9304	.0087
JTS1	<ATJ	137	15:42:16.196	15:43:13.619	57.4222	17.9335	.0000	.0018	39.4887	39.4699	16.1013	16.6822	.0187
JTS1	<AY9	138	15:42:16.739	15:43:14.768	58.0286	17.5202	.0000	.0013	40.5084	40.4988	15.6395	16.0798	.0094
JTS1	<ATS	140	15:42:17.757	15:43:24.468	66.7109	18.8492	.0000	.0022	47.8617	47.8489	16.8744	17.4438	.0127
JTS1	<AZA	143	15:42:18.738	15:43:26.848	68.1101	16.5890	.0000	.0025	51.5211	51.5077	14.6976	15.2677	.0133
JTS1	<AY1	142	15:42:18.647	15:43:27.161	68.5139	17.3103	.0000	.0040	51.2036	51.1911	15.3484	15.8451	.0121
JTS1	<ATT	145	15:42:19.763	15:43:30.454	70.6911	16.8550	.0000	.0027	53.8361	53.8219	15.0556	15.5081	.0138

Figure 12-16 Individual transaction report from the beginning of the first run (Part 1 of 2)

JTS1 <AZB	147	15:42:20.759	15:43:31.498	70.7389	16.7471	.0000	.0015	53.9918	53.9816	15.8321	16.4265	.0101
JTS1 <ATK	149	15:42:21.356	15:43:40.574	79.2185	16.0536	.0000	.0097	63.1648	63.1118	13.9050	14.5561	.0521
JTS1 <ATU	150	15:42:21.757	15:43:44.808	83.0517	17.9742	.0000	.0036	65.0775	65.0601	15.7474	16.5692	.0163
JTS1 <AY2	152	15:42:22.199	15:43:44.912	82.7130	17.7223	.0000	.0101	64.9908	64.9612	15.5117	16.3978	.0288
JTS1 <AZC	153	15:42:22.760	15:43:47.375	84.6149	16.9341	.0000	.0022	67.6808	67.6632	15.1007	15.5919	.0168
JTS1 <ATL	155	15:42:23.312	15:43:48.804	85.4917	17.2923	.0000	.0031	68.1994	68.1858	15.4679	15.9823	.0135
JTS1 <ATV	156	15:42:23.759	15:43:58.140	94.3809	17.5854	.0000	.0020	76.7955	76.7770	15.4626	16.1596	.0181
JTS1 <AZE	162	15:42:26.745	15:44:02.407	95.6628	15.0666	.0000	.0011	80.5962	80.5845	13.9857	14.6860	.0116
JTS1 <AZD	158	15:42:24.757	15:44:02.986	98.2299	18.1984	.0000	.0027	80.0315	80.0097	15.9231	16.6747	.0217
JTS1 <ATW	160	15:42:25.760	15:44:03.212	97.4517	18.2931	.0000	.0071	79.1586	79.1230	15.8782	16.7777	.0355
JTS1 <ATX	164	15:42:27.739	15:44:05.818	98.0785	17.0301	.0000	.0019	81.0484	81.0345	15.9681	16.6863	.0134
JTS1 <AZF	166	15:42:28.755	15:44:13.643	104.888	15.5275	.0000	.0017	89.3605	89.3476	13.5863	14.1524	.0125
JTS1 <ATY	168	15:42:29.747	15:44:17.282	107.535	14.8835	.0000	.0049	92.6516	92.6247	12.8518	13.4025	.0258
JTS1 <AZG	170	15:42:31.121	15:44:20.286	109.165	17.3059	.0000	.0029	91.8597	91.8373	15.4121	15.9350	.0223
JTS1 <ATZ	172	15:42:31.927	15:44:20.493	108.566	17.2903	.0000	.0026	91.2762	91.2492	15.3763	15.9936	.0268
JTS1 <AZH	174	15:42:32.743	15:44:21.324	108.581	15.6221	.0000	.0012	92.9591	92.9499	13.5472	13.9543	.0090
JTS1 <AY3	176	15:42:33.666	15:44:29.774	116.107	16.1125	.0000	.0029	99.9948	99.9768	14.1806	14.8695	.0176
JTS1 <AT0	177	15:42:33.767	15:44:32.260	118.492	15.0124	.0000	.0012	103.480	103.471	12.8444	13.5104	.0089
JTS1 <ATM	179	15:42:34.331	15:44:36.991	122.660	16.6635	.0000	.0076	105.996	105.955	15.7164	16.4126	.0415
JTS1 <AZI	180	15:42:34.757	15:44:38.908	124.151	18.4587	.0000	.0020	105.692	105.680	16.2398	17.1398	.0113
JTS1 <AT1	182	15:42:35.760	15:44:39.004	123.244	17.6886	.0000	.0062	105.555	105.533	15.7903	16.3863	.0226
JTS1 <AZJ	184	15:42:36.765	15:44:48.442	131.676	18.6934	.0000	.0018	112.983	112.970	16.7547	17.3272	.0121
JTS1 <AT2	186	15:42:37.743	15:44:50.360	132.616	18.1282	.0000	.0019	114.488	114.477	16.1530	16.7351	.0103
JTS1 <AY4	188	15:42:37.933	15:44:52.680	134.746	15.6761	.0000	.0023	119.070	119.057	13.6271	14.2751	.0127
JTS1 <AZK	189	15:42:38.758	15:45:03.859	145.101	24.3526	.0000	.1910	120.748	120.113	20.3747	23.4196	.6353
JTS1 <AT3	191	15:42:39.757	15:45:04.319	144.562	24.6981	.0000	.0768	119.864	119.208	20.3491	23.5709	.6551
JTS1 <ATN	193	15:42:40.542	15:45:06.600	146.058	18.1472	.0000	.0013	127.910	127.900	17.1694	17.7405	.0106
JTS1 <AZL	194	15:42:40.754	15:45:11.991	151.237	21.6495	.0098	.0031	129.588	129.563	19.7868	20.3310	.0131
JTS1 <AT4	196	15:42:41.759	15:45:12.405	150.645	19.7419	.0000	.0125	130.903	130.882	18.8474	19.4218	.0212
JTS1 <AZM	198	15:42:42.756	15:45:23.594	160.837	19.7515	.0000	.0027	141.086	141.072	17.3596	18.1339	.0133
JTS1 <AY5	202	15:42:43.761	15:45:23.670	159.908	19.2944	.0000	.0176	140.614	140.558	17.2281	18.0755	.0560

Figure 12-17 Individual transaction report from the beginning of the first run (Part 2 of 2)

In this report, in the Suspend Time column, we see that the first five transactions start almost immediately. They have a MAXJTDLY of zero, MAXJTDLY being the elapsed time during which the user task waited to obtain a CICS JVM TCB, because the CICS system had reached the limit set by the system parameter, MAXJVMTCBS. The sixth transaction, with task number 113, entered the system at 15:42:04. It could not run immediately because there was no JVM TCB available. It was suspended until the first transaction frees a JVM TCB. The first transaction, with task number 103, stopped at 15:42:15 and has a dispatch time of 16 seconds. Transaction 113 was started 5 seconds after transaction 103, so it needed to wait 11seconds before a JVM TCB became available. This is reflected in the total suspend and the MAXJTDLY times. We see the next group of five transactions. Transactions 113 to 121 have suspend times between 11 and 14 seconds and the third group, and transactions 123 to 131 have times between 23 and 29 seconds.

TPNS is starting up to 50 transactions. When a transaction returns an output, immediately another is initiated from the same terminal. The first transaction stopped at 15:42:15.790. We can see that TPNS immediately initiated a new transaction, with number 137, from the same terminal, <ATJ, at 15:42:16.196. We initiated some new work before all 50 terminals each initiated a transaction. This explains why the MAXJTDLY suspend time is going up slowly. It also explains why it takes time to reach a point where the values of average response time, average dispatch time, and average suspend stabilize to the values as shown in Figure 12-12 on page 276.

12.3.2 Xresettable=YES

Knowing that JVM initialization is a time consuming operation, we decided not to increase the MAXJVMTCBS from its default value of 5 to a higher value. Instead we preferred to make a test run with Xresettable=YES in the CICS system properties file in the DFHJVM data set.

As in the first run, we used the Take-up facility after we switched SMF data sets. We used the record selection facility again to write the JTS1 only records to a separate data set with name CICSLS2.JVM.SECOND.RUN.

For the first two reports, we used the same Report Forms and Report Sets as for the first run. The list produced with the JVML Report Set using the JVMLST Report Form is shown in Figure 12-18.

```
 V1R3M0                                                CICS Performance Analyzer
                                                           Performance List
                                                 ____________________________________________
LIST0001 Printed at 15:50:27 10/16/2003    Data from 18:02:00 10/14/2003                    APPLID SCSCPJA6      Page       1

LIST report of JVM related fields

 Tran Userid     TaskNo Stop          Response Dispatch User CPU  KY8 CPU   J8 CPU JVM Elap JVMITime JVM Meth JVMRTime JVM Susp
                        Time           Time     Time     Time     Time     Time     Time     Time     Time     Time     Time
 JTS1 CICSUSER     2249 18:02:00.014    .3887    .0398    .0208    .0195    .0195    .0926    .0000    .0902    .0024    .0532
 JTS1 CICSUSER     2250 18:02:00.162    .5055    .0407    .0171    .0158    .0158    .2227    .0001    .2201    .0025    .1823
 JTS1 CICSUSER     2252 18:02:00.171    .4986    .0379    .0156    .0143    .0143    .2045    .0000    .1984    .0061    .1669
 JTS1 CICSUSER     2251 18:02:00.172    .5070    .0406    .0130    .0118    .0118    .2205    .0000    .2185    .0020    .1802
 JTS1 CICSUSER     2253 18:02:00.202    .5134    .0376    .0136    .0123    .0123    .2314    .0000    .2294    .0020    .1941
 JTS1 CICSUSER     2254 18:02:00.215    .5077    .1569    .0134    .0122    .0122    .1999    .0000    .1969    .0031    .0434
 JTS1 CICSUSER     2255 18:02:00.277    .5304    .0339    .0132    .0120    .0120    .1148    .0000    .1130    .0018    .0813
 JTS1 CICSUSER     2257 18:02:00.284    .4727    .0349    .0128    .0116    .0116    .1122    .0000    .1097    .0025    .0776
 JTS1 CICSUSER     2258 18:02:00.304    .4924    .0347    .0130    .0118    .0118    .1009    .0000    .0988    .0021    .0665
 JTS1 CICSUSER     2259 18:02:00.322    .5105    .0341    .0134    .0119    .0119    .1068    .0000    .1039    .0029    .0730
 JTS1 CICSUSER     2256 18:02:00.332    .5742    .0911    .0532    .0520    .0520    .1611    .0000    .1593    .0018    .0703
 JTS1 CICSUSER     2260 18:02:00.363    .4321    .0455    .0127    .0115    .0115    .0851    .0000    .0835    .0017    .0401
 JTS1 CICSUSER     2261 18:02:00.378    .4411    .0412    .0132    .0118    .0118    .0932    .0000    .0915    .0018    .0524
 JTS1 CICSUSER     2262 18:02:00.386    .2422    .0355    .0123    .0111    .0111    .0819    .0000    .0792    .0027    .0468
 JTS1 CICSUSER     2263 18:02:00.398    .2502    .0309    .0124    .0112    .0112    .0750    .0000    .0724    .0026    .0444
 JTS1 CICSUSER     2264 18:02:00.416    .2689    .0319    .0128    .0115    .0115    .0835    .0000    .0812    .0023    .0518
.
.
.
 JTS1 CICSUSER    15601 18:06:59.730    .1975    .0331    .0128    .0114    .0114    .1070    .0000    .1053    .0016    .0743
 JTS1 CICSUSER    15602 18:06:59.742    .2091    .0331    .0114    .0102    .0102    .0708    .0000    .0691    .0017    .0381
 JTS1 CICSUSER    15603 18:06:59.754    .2207    .0407    .0121    .0109    .0109    .0742    .0000    .0724    .0018    .0338
 JTS1 CICSUSER    15604 18:06:59.765    .2320    .0456    .0120    .0109    .0109    .0814    .0000    .0796    .0017    .0361
 JTS1 CICSUSER    15605 18:06:59.774    .1871    .0390    .0124    .0111    .0111    .0778    .0000    .0758    .0020    .0392
 JTS1 CICSUSER    15606 18:06:59.794    .1776    .0516    .0110    .0099    .0099    .0644    .0000    .0628    .0016    .0133
 JTS1 CICSUSER    15607 18:06:59.820    .1940    .0542    .0119    .0107    .0107    .0777    .0000    .0759    .0018    .0243
 JTS1 CICSUSER    15608 18:06:59.858    .2206    .0628    .0127    .0112    .0112    .1025    .0000    .1004    .0022    .0407
 JTS1 CICSUSER    15609 18:06:59.872    .1986    .0598    .0121    .0109    .0109    .1063    .0000    .1040    .0022    .0468
 JTS1 CICSUSER    15610 18:06:59.875    .1999    .0512    .0122    .0110    .0110    .1011    .0000    .0991    .0020    .0505
 JTS1 CICSUSER    15612 18:06:59.883    .1760    .0308    .0119    .0106    .0106    .0623    .0000    .0594    .0029    .0318
 JTS1 CICSUSER    15611 18:06:59.887    .1890    .0367    .0117    .0104    .0104    .0927    .0001    .0903    .0023    .0563
 JTS1 CICSUSER    15613 18:06:59.932    .2150    .0416    .0113    .0103    .0103    .0731    .0000    .0700    .0031    .0325
 JTS1 CICSUSER    15615 18:06:59.964    .2072    .0720    .0117    .0104    .0104    .0880    .0000    .0848    .0032    .0166
 JTS1 CICSUSER    15617 18:07:00.126    .3510    .2003    .0124    .0112    .0112    .2385    .0000    .1305    .1080    .0386
 JTS1 CICSUSER    15614 18:07:00.140    .4027    .1049    .0124    .0113    .0113    .2661    .0000    .2644    .0016    .1614
 JTS1 CICSUSER    15616 18:07:00.144    .3776    .0980    .0123    .0112    .0112    .2609    .0000    .2592    .0017    .1632
 JTS1 CICSUSER    15618 18:07:00.147    .3311    .0551    .0122    .0110    .0110    .2146    .0000    .2125    .0022    .1599
 JTS1 CICSUSER    15619 18:07:00.154    .2185    .0329    .0123    .0109    .0109    .1893    .0000    .1874    .0018    .1573
 JTS1 CICSUSER    15620 18:07:00.173    .2042    .0298    .0122    .0108    .0108    .0460    .0000    .0442    .0018    .0165
 JTS1 CICSUSER    15621 18:07:00.194    .2173    .0430    .0110    .0101    .0101    .0532    .0000    .0517    .0015    .0105
 JTS1 CICSUSER    15622 18:07:00.226    .2360    .0523    .0121    .0109    .0109    .0813    .0000    .0796    .0017    .0293
 JTS1 CICSUSER    15623 18:07:00.234    .2359    .0574    .0122    .0109    .0109    .0862    .0000    .0844    .0018    .0293
 JTS1 CICSUSER    15624 18:07:00.243    .2442    .0530    .0119    .0108    .0108    .0888    .0000    .0867    .0020    .0361
```

Figure 12-18 Second run: List report

Using the JVMS Report Set in combination with the JVMSUM Report Form produced the output shown in Figure 12-19.

```
V1R3M0                                                CICS Performance Analyzer
                                                          Performance Summary
                                                 ____________________________________________
SUMM0001 Printed at 16:06:45 10/16/2003     Data from 18:01:59 10/14/2003 to 18:07:00 10/14/2003                    Page       1
SUMMARY report of dispatcher wait fields

                      Avg       Avg      Avg      Avg      Avg      Avg      Avg      Avg      Avg      Avg       Avg      Avg
Tran       #Tasks Response Dispatch User CPU  Suspend DispWait  KY8 CPU   J8 CPU JVM Elap JVMITime JVM Meth JVMRTime JVM Susp
                      Time     Time     Time     Time     Time     Time     Time     Time     Time     Time      Time     Time
JTS1        13376    .3839    .0530    .0130    .3309    .0110    .0117    .0117    .1115    .0000    .1084     .0031    .0589
```

Figure 12-19 Second run: Summary report

When we compare the report in Figure 12-19 with the report in Figure 12-12 on page 276, we immediately see the positive effect of resettable JVM. The transaction rate went from 19 transactions per minute to 2675 transactions per minute. Response time dropped from 187 seconds to .38 seconds. We see also that for a reused JVM, the initialization time became zero. Note that we use here a subset of five minutes that excludes the JVM initialization of the first five transactions.

However, in the summary report, we still see that the Avg Suspend Time still makes up the biggest part of the response time. We run again the JVMS Report Set with the JVMDSP Report Form. The result is shown in Figure 12-20.

```
 V1R3M0                                               CICS Performance Analyzer
                                                          Performance Summary
                                                 ____________________________________________
SUMM0001 Printed at 16:49:25 10/16/2003     Data from 18:01:59 10/14/2003 to 18:07:00 10/14/2003                    Page       1
SUMMARY report of dispatcher wait fields

             Avg       Avg      Avg      Avg      Avg      Avg      Avg      Avg
Tran     Response Dispatch User CPU  Suspend Disp1Dly DispWait MaxJTDly MaxOTDly
             Time     Time     Time     Time     Time     Time     Time     Time
JTS1        .3839    .0530    .0130    .3309    .0001    .0110    .2715    .0000
```

Figure 12-20 Second run: Summary report with dispatch delay information

We see that there is still a delay in availability of JVM TCBs. Our next attempt to improve performance is to specify the ibm.jvm.shareable.application.class.path property in the HFS properties file.

12.3.3 Using the sharable application classpath

For this run, we used the same Report Forms and Report Sets as for the previous runs. We only changed the SMF data set name in the systems definition and the date and time interval when submitting the print jobs. Again, we used a time interval of five minutes, not including the start or end of the test period.

Here we show only the output of the summary reports. Figure 12-21 shows the summary report using the sample provided JVMSUM Report Form. This first summary report shows that, by caching the used classes, we could increase the throughput to 3431 transactions per minute. We also see that all measured CPU values decreased as well as almost all elapsed time values.

```
V1R3M0                                                CICS Performance Analyzer
                                                          Performance Summary
                                                 ____________________________________________
SUMM0001 Printed at 10:18:50 10/17/2003     Data from 17:54:59 10/16/2003 to 18:00:02 10/16/2003                    Page       1
SUMMARY report of dispatcher wait fields

                      Avg       Avg      Avg      Avg      Avg      Avg      Avg      Avg      Avg     Avg       Avg      Avg
Tran       #Tasks Response Dispatch User CPU  Suspend DispWait  KY8 CPU   J8 CPU JVM Elap JVMITime JVM Meth JVMRTime JVM Susp
                      Time     Time     Time     Time     Time     Time     Time     Time     Time     Time      Time     Time
JTS1        17157    .1220    .0103    .0071    .1116    .0052    .0059    .0059    .0654    .0000    .0632     .0022    .0555
```

Figure 12-21 Third run: JVMS + JVMSUM

Figure 12-22 shows the report using the JVMDSP Report Form that we created ourselves including the time waiting for a JVM to become available. The second Summary report shows that there is still a 50 milliseconds queuing delay time on the MAXJVMTCBS number of TCBs. In the last run, we decided to see the effect of allocating one more TCB. With the CEMT SET DISPATCH command, we changed the number of MAXJVMTCBS to six and launched a new TPNS workload.

```
V1R3M0                                                CICS Performance Analyzer
                                                          Performance Summary
                                                 ____________________________________________
SUMM0001 Printed at 10:19:11 10/17/2003     Data from 17:54:59 10/16/2003 to 18:00:02 10/16/2003                    Page       1
SUMMARY report of dispatcher wait fields

             Avg       Avg      Avg      Avg      Avg      Avg      Avg      Avg
Tran     Response Dispatch User CPU  Suspend Disp1Dly DispWait MaxJTDly MaxOTDly
             Time     Time     Time     Time     Time     Time     Time     Time
JTS1        .1220    .0103    .0071    .1116    .0001    .0052    .0558    .0000
```

Figure 12-22 Third run: JVMS + JVMDSP

Figure 12-23 and Figure 12-24 show the two summary reports.

```
V1R3M0                                                CICS Performance Analyzer
                                                          Performance Summary
                                                 ____________________________________________
SUMM0001 Printed at 11:36:13 10/17/2003     Data from 11:14:59 10/17/2003 to 11:19:59 10/17/2003                    Page       1
SUMMARY report of dispatcher wait fields

                      Avg       Avg      Avg      Avg      Avg      Avg      Avg      Avg      Avg     Avg       Avg      Avg
Tran       #Tasks Response Dispatch User CPU  Suspend DispWait  KY8 CPU   J8 CPU JVM Elap JVMITime JVM Meth JVMRTime JVM Susp
                      Time     Time     Time     Time     Time     Time     Time     Time     Time     Time      Time     Time
JTS1        17138    .1256    .0097    .0068    .1160    .0063    .0056    .0056    .0761    .0000    .0740     .0021    .0669
```

Figure 12-23 Final run: JVMS + JVMSUM

The report shows that all values, compared to the previous report, are more or less the same. Only the MAXJTDLY time went down from .0558 to .0487, due to one additional TCB for running JVM programs. Increasing the number of JVM TCBs does not change to the performance of the running JVM program. Given the type of workload introduced by TPNS, where a new transaction is immediately initiated when the previous one terminates, it is difficult to eliminate the delay time on the JVM TCBs as long as the number of TCBs does not reach, or is equal to, the number of simulated terminals in TPNS.

```
V1R3M0                                                CICS Performance Analyzer
                                                          Performance Summary
                                                 ____________________________________________
SUMM0001 Printed at 11:37:20 10/17/2003     Data from 11:14:59 10/17/2003 to 11:19:59 10/17/2003                    Page       1
SUMMARY report of dispatcher wait fields

             Avg       Avg      Avg      Avg      Avg      Avg      Avg      Avg
Tran     Response Dispatch User CPU  Suspend Disp1Dly DispWait MaxJTDly MaxOTDly
             Time     Time     Time     Time     Time     Time     Time     Time
JTS1        .1256    .0097    .0068    .1160    .0001    .0063    .0487    .0000
```

Figure 12-24 Final run: JVMS + JVMDSP

12.4 Conclusion

The CICS PA reports that we produced with this scenario confirm that the initiation of a JVM is an expensive operation. You should avoid it as much as possible. We recommend that you always use a properties file that contains Xresettable=YES.

We also recommend that you use sharable application classpaths to cache your classes and prevent their reload. Our JVM program contained only two classes and we saw a remarkable gain in CPU and elapsed time.

13

Enterprise JavaBeans in CICS

This chapter explains how to use CICS Performance Analyzer (PA) to report on Java Virtual Machine (JVM) statistics. We used an application that has three versions, all of them providing exactly the same user interface and functionality. The difference is that the enterprise bean that implements the business logic can use three different interfaces to manage user data.

The three different versions of the enterprise bean are:

- **JCICS version**: Uses JCICS classes to directly access VSAM data sets. We identify this version as JCIM business application and associate JCIM transaction code with the bean name.
- **SQLJ version**: Uses the SQLJ Java application programming interface (API) (static Structured Query Language (SQL)) to access DB2 data. We identify this version as SQLM business transaction and associate SQLM transaction code with the bean name.
- **JDBC version**: Uses the Java Database Connectivity (JDBC) API (dynamic SQL) to access DB2 data. We identify this version as JDBM business transaction and associate JDBM transaction code with the bean name.

We ran three different versions of an enterprise bean application 100 times, each over a single thread to produce CICS PA JVM reports. Then we then each enterprise bean application 10 times over 10 threads and then five times over 20 threads. We used CICS PA to produce performance reports for each variety of the enterprise bean workload.

A single run of an enterprise bean application contains 13 method calls. In other words, execution of a single business transaction causes execution of 13 CICS transactions.

Note: These scenarios were used to provide situations that allow us to demonstrate the use of CICS Performance Analyzer reports when running with an enterprise bean workload. The CICS regions were not necessarily tuned for peak performance. In some cases, they had a high level of tracing active. Therefore these scenarios and the results provided are for demonstration purposes only. They do not provide definitive results for a customer environment.

13.1 CICS logical EJB server configuration

You can implement a CICS Enterprise JavaBean (EJB) server in a single CICS region. However, in a production environment, you may want to create a server consisting of multiple regions. In such a configuration, a failure of a single region is less critical, and you can implement workload balancing while providing a single system image.

A *CICS logical EJB server* consists of the following elements:

- A defined set of cloned listener regions that have identical TCPIPSERVICE definitions to listen for incoming Internet Inter-ORB Protocol (IIOP) requests
- A set of cloned application owning regions (AORs), each of which supports an identical set of enterprise beans in identically defined CORBA servers.

Workload balancing can be implemented at two levels:

- Balancing client connections across the listener regions: We used TCP/IP port sharing to achieve this goal.
- Balancing method requests across the AORs: We used the CICSPlex System Manager (SM) provided distributed routing program, EYU9XLOP, to achieve this goal.

For our tests, we implemented the configuration described in 5.1.2, “Configuration for Enterprise JavaBean workloads” on page 130, and shown in Figure 13-1.

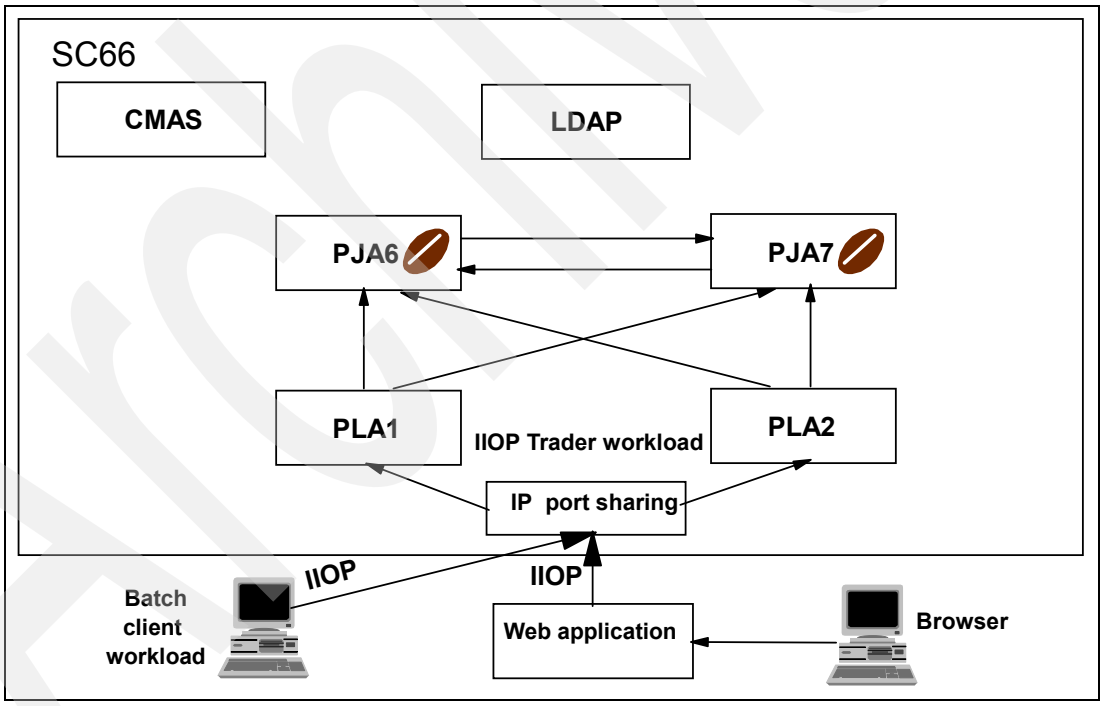

Figure 13-1 CICS logical EJB server

For a complete description about how to set up a CICS logical EJB server, refer to *CICS Transaction Server for z/OS Java Applications in CICS*, SC34-6000, and to Chapter 5 of *Enterprise JavaBeans for z/OS and OS/390 CICS Transaction Server V2.2*, SG24-6284. You can also refer to Chapters 10, 11, and 12 in SG24-6284 for a description of the ITSO enterprise bean Trader application.

13.2 Single thread enterprise bean scenario

We use CICS PA reports to compare the resources used by the three different enterprise beans. See 5.1.2, “Configuration for Enterprise JavaBean workloads” on page 130, for a description of the system setup that enabled us to run the EJB scenario.

13.2.1 CICS TS V2.2 JDBC/SQLJ support

CICS Java applications can access DB2 data via the JDBC and SQLJ APIs. The JDBC API uses the dynamic SQL model. The SQLJ API uses the static SQL model.

In a CICS environment, the DB2 JDBC driver is link-edited with the CICS DB2 language interface stub DSNCLI. Therefore, JDBC and SQLJ requests are converted by the JDBC driver into EXEC SQL requests and then routed into the existing CICS-DB2 Attachment Facility.

13.2.2 Initiating transaction workload

We associated the following transaction codes with the bean name:

- SQLM for the SQLJ version
- JDBM for the JDBC version
- JCIM for the JCICS (VSAM) version

We used the CREA transaction in CICS to provide REQUESTMODEL definitions for various methods. For each method, we defined a different transaction identifier. This way, we could monitor performance down to the method level. REQUESTMODEL definitions had to be installed in all regions, listener regions as well as AORs.

Figure 13-2 shows the transaction identifiers for the methods for the SQLJ version. We also associated transaction code SQLN with the `create()` method.

```
SQLM     DistributedTraderAgent
SQL1        buy
               long
SQL2        getCompanyDetails
SQL3        getCustomerName
SQL4        listCompanies
SQL5        listPosition
SQL6        selectCompany
               java.lang.String
SQL7        sell
               long
SQL8        getEJBHome (inherited from EJBObject)
SQL9        getHandle (inherited from EJBObject)
SQLA        getPrimaryKey (inherited from EJBObject)
SQLB        isIdentical (inherited from EJBObject)
               javax.ejb.EJBObject
SQLR        remove (inherited from EJBObject)
```

Figure 13-2 SQLJ transactions and methods

Figure 13-3 shows the transactions and method association for the JDBC version. Again we used the CREA transaction to create the REQUESTMODELs and installed them in all regions. We also associated transaction code JDBN with the `create()` method.

```
JDBM     DistributedTraderAgent
JDB1        buy
               long
JDB2        getCompanyDetails
JDB3        getCustomerName
JDB4        listCompanies
JDB5        listPosition
JDB6        selectCompany
               java.lang.String
JDB7        sell
               long
JDB8        getEJBHome (inherited from EJBObject)
JDB9        getHandle (inherited from EJBObject)
JDBA        getPrimaryKey (inherited from EJBObject)
JDBB        isIdentical (inherited from EJBObject)
               javax.ejb.EJBObject
JDBC        remove (inherited from EJBObject)
```

Figure 13-3 JDBC transactions and methods

Figure 13-4 shows the transactions and method association for the JCICS (VSAM) version. Again we used the CREA transaction to create the REQUESTMODELs and installed them in all regions. We also associated the JCIN transaction code with the `create()` method.

```
JCIM     DistributedTraderAgent
JCI1        buy
               long
JCI2        getCompanyDetails
JCI3        getCustomerName
JCI4        listCompanies
JCI5        listPosition
JCI6        selectCompany
               java.lang.String
JCI7        sell
               long
JCI8        getEJBHome (inherited from EJBObject)
JCI9        getHandle (inherited from EJBObject)
JCIA        getPrimaryKey (inherited from EJBObject)
JCIB        isIdentical (inherited from EJBObject)
               javax.ejb.EJBObject
JCIC        remove (inherited from EJBObject)
```

Figure 13-4 JVSM transactions and methods

Remember that in logical CICS EJB server, REQUESTMODEL definitions must be installed in IIOP listener regions as well as in AORs.

To produce a workload, we used a batch file that drives the JDBC, SQLJ, and JVSM applications. In this test, we ran each business application sequentially (that is, using only one thread), a total of 100 times.

Producing CICS Performance Analyzer reports

We let the batch run of the SQLJ application complete. We flushed the CICS SMF buffers. We did this by turning performance monitoring off and on in both SCSCPJA6 and SCSCPJA7. We then switched the SMF data sets, using the /I SMF command. Our SMF data was copied into SMFDATA.ALLRECS.G8684V00. We needed to add this SMF data to the CICS system

definitions that were used to run the workload, in this case SCSCPJA6 and SCSCPJA7 (Figure 13-5).

```
---------------------------- System Definitions ----------------------------
   File  Edit  Dictionary  View  Options  Help
 ---------------------------------------------------------------------------
                                CICS System              Row 1 of 1 More: >
 Command ===>                                            Scroll ===> CSR

 CICS System definition:
  APPLID . . . . . . . . SCSCPJA7  MVS Image . . SC66
  Description  . . . . . System added by take-up
  CICS Version (VRM) . . 620
  MCT Suffix . . . . . .
  MCT Load Library . . .
  SDFHLOAD Library . . .
  Dictionary DSN . . . .

 / Exc              SMF Data Set Name +               UNIT +  SEQ VOLSER +
       'SMFDATA.ALLRECS.G8684V00'                     DASD
```

Figure 13-5 Adding SMF data to CICS System definition

After we added the SMF data to the CICS System Definitions, we created a group that contained the two CICS System Definitions. To do this, we used option 3 of the System Definitions menu. In Figure 13-6, we specified `new EJBGRP` to create a new group.

```
   File  Edit  Filter  View  Options  Help
 ---------------------------------------------------------------------------
                                Groups                        Row 1 from 2
 Command ===> new EJBGRP                                Scroll ===> CSR

 Select to review the Systems in the Group.

 /   Use  Group                 Description
       3 DB2GRP
       1 DB2GROUP
```

Figure 13-6 New group EJBGRP

On the next screen, we added the two CICS system definitions (SCSCPJA6 and SCSCPJA7) that we wanted to include in the new group (Figure 13-7).

```
---------------------------- System Definitions ----------------------------
  File  Edit  Options  Help
 ---------------------------------------------------------------------------
                           Systems in this Group            Row 1 to 2 of 2
 Command ===>                                            Scroll ===> CSR

 Group . . . . . . EJBGRP
 Description . . .

 /  System +  Type     Image                 Description
    SCSCPJA6  CICS     SC66     System added by take-up
    SCSCPJA7  CICS     SC66     System added by take-up
```

Figure 13-7 Adding CICS system definitions

To obtain the reports that we required for the JVM, we used the sample reports JVMLST (List Report Form) and JVMSUM (Summary Report Form). The sample Report Forms are found on the Report Forms screen, under Samples. After selecting the samples, we populated the Report Forms data set with the sample Report Forms. We did this and had the list of all sample Report Forms. Figure 13-8 shows some of the samples available. We selected **JVMLST** and **JVMSUM**.

```
                    Sample Report Forms    Row 33 to 48 of 87
Command ===>                               Scroll ===> CSR

Select one or more Sample Report Forms then press EXIT.

     Name    Type               Description
   ICSUM     SUMMARY  Interval Control Activity
   IMSDBLST  LIST     Transaction DBCTL Usage Analysis
   IMSDBSUM  SUMMARY  Transaction DBCTL Usage Analysis
   IMSRQLST  LIST     Transaction DBCTL Req Analysis
   IMSRQSUM  SUMMARY  Transaction DBCTL Req Analysis
   IMSSUM    SUMMARY  IMS DBCTL PSB Usage Analysis
   JCLST     LIST     Journaling/Logging Activity
   JCSUM     SUMMARY  Journaling/Logging Activity
   JVMLST    LIST     Java Virtual Machine Analysis
   JVMSUM    SUMMARY  Java Virtual Machine Analysis
 s PCLST     LIST     Program Request Activity
 s PCSUM     SUMMARY  Program Request Activity
   PSTORLST  LIST     Program Storage Analysis
   PSTORSUM  SUMMARY  Program Storage Analysis
   RMIDBLST  LIST     CICS RMI Analysis - DB2 Overview
   RMIDBSUM  SUMMARY  CICS RMI Analysis - DB2 Overview
```

Figure 13-8 Sample Report Forms

After we set the forms we wanted, we created a Report Set to use for the performance report. To create a Report Set, we selected option 2 on the CICS Performance Analyzer main menu. We specified `new EJBREP and` created the new Report Set (Figure 13-9).

```
  File  Systems  Confirm  Options  Help
 ------------------------------------------------------------------------------
                                Report Sets                    Row 1 to 9 of 9
 Command ===> new EJBREP                                     Scroll ===> CSR

 Report Sets Data Set . . : CICSLS5.CICSPA.RSET

  /    Name             Description                Changed        ID
      DB2REPS  CICS PA Report Set              2003/10/14 12:00 CICSLS5
      DB2REP2  CICS PA Report Set              2003/10/15 13:35 CICSLS5
      EXCREP   CICS PA Report Set              2003/10/23 11:28 CICSLS5
      LOGREPS  CICS PA Report Set              2003/10/22 14:39 CICSLS5
      LOGREP2  CICS PA Report Set              2003/10/18 09:48 CICSLS5
      REPIT8   CICS PA Report Set              2003/10/25 12:09 CICSLS5
      REPORT1  CICS PA Report Set              2003/10/23 08:49 CICSLS5
      REPORT2  CICS PA Report Set              2003/10/25 11:05 CICSLS5
      REPORT3  CICS PA Report Set              2003/10/22 18:47 CICSLS5
```

Figure 13-9 New Report Set

The two sample Report Forms were added to the list of Report Form that we already defined (see Figure 13-10). After the Report Forms were added, they did not appear in the list of samples.

```
  File  Confirm  Samples  Options  Help
--------------------------------------------------------------------------------
                                Report Forms                  2 members added
Command ===>                                                 Scroll ===> CSR

Report Forms Data Set  . . : CICSLS5.CICSPA.FORM

/   Name    Type              Description                Changed        ID
   DB2PERF  LIST    List Report Form                 2003/10/15 12:05 CICSLS5
   EXCFORM  LIST    List Report Form                 2003/10/25 13:14 CICSLS5
   JVMLST   LIST    Java Virtual Machine Analysis    2003/03/08 00:00 CICSPA
   JVMSUM   SUMMARY Java Virtual Machine Analysis    2003/03/08 00:00 CICSPA
   SUSPEND  LIST    List Report Form                 2003/10/22 17:30 CICSLS5
```

Figure 13-10 Report Forms

We used the Report Set to produce both a List and a Summary report for transaction SQLM. We selected **List** in the category Performance Reports (Figure 13-11).

```
  File  Systems  Confirm  Options  Help
--------------------------------------------------------------------------------
EDIT                      Report Set - EJBREP                     Row 1 of 34
Command ===>                                                 Scroll ===> CSR

Description . . . CICS PA Report Set

Enter "/" to select action.

            ** Reports **                          Active
     -      Options                                  No
                Global                               No
     -      Selection Criteria                       No
                Performance                          No
                Exception                            No
     -      Performance Reports                      No
            s   List                                 No
                List Extended                        No
                Summary                              No
                Totals                               No
                Wait Analysis                        No
                Cross-System Work                    No
                Transaction Group                    No
                BTS                                  No
                Workload Activity                    No
     -      Exception Reports                        No
```

Figure 13-11 Specifying the List Performance Report

On the Performance List Report screen (Figure 13-12), we specified `JVMLST` in the Form field. We also chose Performance for selection criteria.

```
  File  Systems  Options  Help
--------------------------------------------------------------------------------
                      EJBREP - Performance List Report
Command ===>

System Selection:                        Report Output:
 APPLID . .           +                   DDname . . . . . . . . . LIST0001
 Image  . .           +                   Print Lines per Page . .      (1-255)
 Group  . .           +

Report Format:
 Form . . . JVMLST    +
 Title  . .


Selection Criteria:
 s  Performance
```

Figure 13-12 Choosing Report Form and selecting system

On the Performance Select Statement screen, we selected transaction **SQL*** (Figure 13-13). This is because we wanted all the transaction codes from all the methods that made up the SQLM transaction.

```
  File  Edit  Object Lists  Options  Help
--------------------------------------------------------------------------------
                   EJBREP - Performance Select Statement   Row 1 of 2 More: >
Command ===>                                                 Scroll ===> CSR

         Active  --------------- Report Interval ----------------
   Inc   Start   -------- From ---------  --------- To ----------
   Exc   Stop    MM/DD/YYYY  HH:MM:SS.TH  MM/DD/YYYY  HH:MM:SS.TH


--------------------------------------------------------------------------------

   Inc  Field            --- Value or Range ---   Object
/  Exc  Name +    Type    Value/From   To          List +
   INC  TRAN              SQL*
```

Figure 13-13 Selecting a transaction

After we finished with the List reports, we saved our changes and selected the Summary Report, used the JVMSUM form, and selected the transaction **SQL***. We ran both the List and Summary reports. We needed to add the group EJBGRP to the Run Report Set screen (Figure 13-14).

```
  File  Systems  Options  Help
--------------------------------------------------------------------------------
                              Run Report Set EJBREP
Command ===>

Specify run Report Set options then press Enter to continue submit.

System Selection:
 CICS APPLID . .           +  Image . .           +  Group . . EJBGRP    +
 DB2 SSID  . . .       +      Image . .           +  Group . .           +
 MQ SSID . . . .       +      Image . .           +  Group . .           +
 Logger  . . . .           +  Image . .           +  Group . .           +

 /  Override System Selections specified in Report Set

                                          ----- Report Interval ------
Missing SMF Files Option:                      MM/DD/YYYY  HH:MM:SS.TH
1  1. Issue error message                 From
   2. Leave DSN unresolved in JCL         To
   3. Disregard offending reports

Enter "/" to select option
/  Edit JCL before submit
```

Figure 13-14 Run Report Set

Figure 13-15 shows part of the first page from the list report. It shows one SQLM transaction and some of its method transactions.

```
 V1R3M0                                          CICS Performance Analyzer
                                                   Performance List
                                                 ____________________________________
LIST0001 Printed at 17:25:39 10/29/2003    Data from 17:16:44 10/29/2003                    APPLID SCSCPJA6      Page       1
Transaction Java Virtual Machine (JVM) Usage Analysis - Detail

 Tran Userid     TaskNo Stop          Response Dispatch User CPU  KY8 CPU   J8 CPU JVM Elap JVMITime JVM Meth JVMRTime JVM Susp
                        Time           Time     Time     Time     Time     Time     Time     Time     Time     Time     Time
 SQLN CICSUSER      164 17:16:44.230   5.6586   5.5701   1.0281   1.0270   1.0248   5.6576    .0000   5.5813    .0763    .0884
 SQL4 CICSUSER      165 17:16:46.322   2.1161   2.1078    .4671    .4661    .4624   2.1145    .0000   2.0477    .0668    .0082
 SQL6 CICSUSER      166 17:16:46.905    .5870    .5801    .3266    .3256    .3215    .5849    .0000    .5475    .0374    .0065
 SQL3 CICSUSER      167 17:16:48.967    .1432    .1367    .1176    .1167    .1157    .1421    .0000    .1369    .0052    .0063
 SQL5 CICSUSER      168 17:16:49.313    .3188    .3123    .1503    .1494    .1459    .3171    .0000    .3106    .0064    .0064
 SQL5 CICSUSER      169 17:16:49.482    .1332    .1274    .0885    .0876    .0842    .1315    .0000    .1263    .0052    .0057
 SQL1 CICSUSER      170 17:16:49.683    .1631    .1562    .0695    .0685    .0634    .1614    .0000    .1558    .0056    .0068
 SQL7 CICSUSER      171 17:16:49.944    .2274    .2204    .1266    .1257    .1207    .2257    .0000    .2205    .0052    .0068
 SQLM CICSUSER      172 17:16:50.154    .1789    .1726    .0765    .0755    .0745    .1781    .0000    .1490    .0291    .0062
 SQL3 CICSUSER      173 17:16:50.326    .1572    .1508    .1303    .1294    .1285    .1561    .0000    .1510    .0051    .0063
 SQL5 CICSUSER      174 17:16:50.577    .2200    .2137    .1776    .1767    .1734    .2184    .0000    .2131    .0053    .0061
 SQL5 CICSUSER      175 17:16:50.708    .0981    .0918    .0717    .0708    .0675    .0965    .0000    .0904    .0061    .0062
```

Figure 13-15 Performance List report

The Performance Summary Report follows the Performance List Report (Figure 13-16).

```
 V1R3M0                                                CICS Performance Analyzer
                                                          Performance Summary
                                                 ____________________________________________
SUMM0001 Printed at 17:25:39 10/29/2003     Data from 17:16:38 10/29/2003 to 17:22:34 10/29/2003                    Page       1
Transaction Java Virtual Machine (JVM) Usage Analysis - Summary

                      Avg       Avg      Avg      Avg      Avg      Avg      Avg      Avg      Avg      Avg       Avg      Avg
Tran       #Tasks Response Dispatch User CPU  Suspend DispWait  KY8 CPU   J8 CPU JVM Elap JVMITime JVM Meth JVMRTime JVM Susp
                      Time     Time     Time     Time     Time     Time     Time     Time     Time     Time      Time     Time
SQLM          200    .1161    .1025    .0697    .0137    .0007    .0688    .0680    .1151    .0000    .0769     .0383    .0135
SQLN          100    .4450    .4139    .1349    .0311    .0013    .1339    .1331    .4438    .0000    .4032     .0406    .0309
SQL1          100    .0995    .0834    .0511    .0161    .0015    .0502    .0456    .0979    .0000    .0905     .0074    .0160
SQL3          200    .0688    .0544    .0410    .0143    .0006    .0402    .0393    .0679    .0000    .0609     .0069    .0142
SQL4          100    .1393    .1237    .0717    .0155    .0008    .0707    .0675    .1367    .0000    .0993     .0374    .0153
SQL5          400    .0791    .0659    .0483    .0132    .0008    .0474    .0441    .0773    .0000    .0688     .0085    .0130
SQL6          100    .0870    .0722    .0469    .0148    .0017    .0460    .0424    .0846    .0000    .0767     .0078    .0138
SQL7          100    .1035    .0882    .0577    .0153    .0007    .0568    .0522    .1010    .0000    .0919     .0091    .0152
```

Figure 13-16 Performance Summary report

Figure 13-17 shows the elapsed time of the SQLM workload. From this report, you can see that running all 100 transactions took 5 minutes and 50 seconds. That is, we achieved a transaction rate of 4 transactions per second (1300 CICS transactions in 350 seconds).

```
 V1R3M0                                                CICS Performance Analyzer
                                                          Performance List
                                                 ____________________________________________
LIST0001 Printed at 16:45:50 10/31/2003    Data from 17:16:44 10/29/2003                 APPLID SCSCPJA6      Page       1
Transaction Java Virtual Machine (JVM) Usage Analysis - Detail

 Tran Userid     TaskNo Stop          Response Dispatch User CPU  KY8 CPU   J8 CPU JVM Elap JVMITime JVM Meth JVMRTime JVM Susp
                        Time            Time     Time     Time     Time     Time     Time     Time     Time      Time     Time
 SQLN CICSUSER     164 17:16:44.230    5.6586   5.5701   1.0281   1.0270   1.0248   5.6576    .0000   5.5813     .0763    .0884
 SQL5 CICSUSER    1426 17:22:34.380     .0523    .0459    .0377    .0370    .0340    .0510    .0000    .0448     .0061    .0064
|   |   |   |   |   |_____________
|   |   |   |   |   |   00:05:50
```

Figure 13-17 Elapsed time for SQLM transactions

We ran the JDBM transaction and collected the SMF data in the same way as for the SQLM transaction. Now, we did not need to set up a new Report Form since we already did so for the SQLM transaction. However, we needed to add the SMF data set to the CICS APPLIDs on the System Definition screen. We wanted to create a new Report Set for the JDBM transaction. We did this by specifying `new EJBREP2` on the Report Set screen (Figure 13-18).

```
  File  Systems  Confirm  Options  Help
--------------------------------------------------------------------------------
                                Report Sets                 Row 1 to 10 of 10
Command ===> new ejbrep2                                     Scroll ===> CSR

Report Sets Data Set . . : CICSLS5.CICSPA.RSET

 /    Name              Description                Changed        ID
     DB2REPS  CICS PA Report Set              2003/10/14 12:00 CICSLS5
     DB2REP2  CICS PA Report Set              2003/10/15 13:35 CICSLS5
     EJBREP   CICS PA Report Set              2003/10/29 08:48 CICSLS5
     EXCREP   CICS PA Report Set              2003/10/23 11:28 CICSLS5
     LOGREPS  CICS PA Report Set              2003/10/22 14:39 CICSLS5
     LOGREP2  CICS PA Report Set              2003/10/18 09:48 CICSLS5
     REPIT8   CICS PA Report Set              2003/10/25 12:09 CICSLS5
     REPORT1  CICS PA Report Set              2003/10/23 08:49 CICSLS5
     REPORT2  CICS PA Report Set              2003/10/25 11:05 CICSLS5
     REPORT3  CICS PA Report Set              2003/10/22 18:47 CICSLS5
```

Figure 13-18 New Report Set

On the new Report Set, we selected both the **List** and **Summary** report options. As shown in Figure 13-19, we added the Report Form JVMLST to the Performance List report. We also selected the **Performance** selection criteria.

```
  File  Systems  Options  Help
--------------------------------------------------------------------------------
                     EJBREP2 - Performance List Report
Command ===>

System Selection:                        Report Output:
 APPLID . .          +                    DDname . . . . . . . . . LIST0001
 Image  . .          +                    Print Lines per Page . .      (1-255)
 Group  . .          +

Report Format:
 Form . . . JVMLST   +
 Title  . .


Selection Criteria:
 s  Performance
```

Figure 13-19 List Report

In the Selection Criteria screen, we requested to include just the **JDB*** transactions (Figure 13-20).

```
  File  Edit  Object Lists  Options  Help
--------------------------------------------------------------------------------
                    EJBREP2 - Performance Select Statement  Row 1 of 9 More: >
Command ===>                                                  Scroll ===> CSR

         Active  --------------- Report Interval ----------------
   Inc   Start   -------- From ---------  --------- To ----------
   Exc   Stop    MM/DD/YYYY  HH:MM:SS.TH  MM/DD/YYYY  HH:MM:SS.TH


--------------------------------------------------------------------------------

   Inc  Field             --- Value or Range ---   Object
/  Exc  Name +    Type    Value/From   To          List +

   INC  TRAN              JDB*
```

Figure 13-20 Selection criteria

We set up the Summary Report with the same selection criteria option and added the form JVMSUM. We ran the new reports. Both the List and Summary Performance Reports were active as indicated by *yes* in the Active column for each. We entered a RUN command on the command line to run both reports at the same time. The group EJBGRP was still specified on the Report Set screen, so we did not need to add it again (Figure 13-21).

```
  File  Systems  Options  Help
--------------------------------------------------------------------------------
                              Run Report Set EJBREP2
Command ===>

Specify run Report Set options then press Enter to continue submit.

System Selection:
 CICS APPLID . .          +  Image . .          +  Group . . EJBGRP    +
 DB2 SSID  . . .      +      Image . .          +  Group . .           +
 MQ SSID . . . .      +      Image . .          +  Group . .           +
 Logger  . . . .          +  Image . .          +  Group . .           +

 /  Override System Selections specified in Report Set

                                        ----- Report Interval ------
Missing SMF Files Option:                    MM/DD/YYYY  HH:MM:SS.TH
1  1. Issue error message               From
   2. Leave DSN unresolved in JCL       To
   3. Disregard offending reports

Enter "/" to select option
/  Edit JCL before submit
```

Figure 13-21 Submitting Report Set

Figure 13-22 shows the Performance List report.

```
 V1R3M0                                                CICS Performance Analyzer
                                                          Performance List
                                                 ____________________________________________
LIST0001 Printed at 17:34:42 10/29/2003    Data from 17:26:29 10/29/2003                    APPLID SCSCPJA7      Page       1
Transaction Java Virtual Machine (JVM) Usage Analysis - Detail

 Tran Userid     TaskNo Stop          Response Dispatch User CPU  KY8 CPU   J8 CPU JVM Elap JVMITime JVM Meth JVMRTime JVM Susp
                        Time           Time     Time     Time     Time     Time     Time     Time     Time     Time     Time
 JDB4 CICSUSER     4564 17:26:29.967    .3291    .3225    .1172    .1165    .1133    .3276    .0000    .2917    .0359    .0064
 JDB6 CICSUSER     4565 17:26:30.177    .1710    .0840    .0702    .0694    .0660    .1695    .0000    .1365    .0329    .0869
 JDBM CICSUSER     4566 17:26:30.248    .0576    .0515    .0430    .0424    .0416    .0571    .0000    .0244    .0327    .0060
 JDB3 CICSUSER     4567 17:26:30.348    .0562    .0500    .0405    .0399    .0390    .0555    .0000    .0526    .0029    .0060
 JDB5 CICSUSER     4568 17:26:30.534    .0342    .0280    .0207    .0200    .0167    .0327    .0000    .0292    .0035    .0061
 JDB1 CICSUSER     4569 17:26:30.616    .0379    .0312    .0211    .0204    .0160    .0363    .0000    .0328    .0035    .0063
 JDB3 CICSUSER     4570 17:26:30.879    .0296    .0230    .0172    .0165    .0155    .0286    .0000    .0251    .0034    .0062
 JDB5 CICSUSER     4571 17:26:30.956    .0315    .0253    .0196    .0190    .0156    .0302    .0000    .0271    .0030    .0060
 JDB5 CICSUSER     4572 17:26:31.128    .1148    .1087    .0232    .0224    .0192    .1134    .0000    .1100    .0034    .0060
 JDBN CICSUSER     4573 17:26:32.771    .1958    .1656    .0749    .0742    .0735    .1951    .0000    .1612    .0339    .0301
 JDB6 CICSUSER     4574 17:26:32.960    .0367    .0305    .0238    .0232    .0197    .0355    .0000    .0319    .0035    .0061
 JDBM CICSUSER     4575 17:26:33.149    .1415    .0570    .0460    .0453    .0443    .1408    .0000    .1052    .0355    .0843
 JDB7 CICSUSER     4576 17:26:33.713    .0668    .0603    .0404    .0397    .0353    .0653    .0000    .0610    .0042    .0064
 JDB3 CICSUSER     4577 17:26:33.914    .0568    .0504    .0425    .0418    .0409    .0562    .0000    .0527    .0035    .0063
 JDB5 CICSUSER     4578 17:26:33.992    .0331    .0267    .0195    .0189    .0158    .0319    .0000    .0291    .0028    .0063
 JDBN CICSUSER     4579 17:26:36.142    .5812    .5615    .1008    .1001    .0992    .5803    .0000    .5467    .0335    .0195
 JDB4 CICSUSER     4580 17:26:36.245    .0683    .0617    .0497    .0489    .0458    .0667    .0000    .0321    .0346    .0065

 V1R3M0                                                CICS Performance Analyzer
                                                          Performance List
                                                 ____________________________________________
LIST0001 Printed at 17:34:42 10/29/2003    Data from 17:26:29 10/29/2003                    APPLID SCSCPJA6      Page       2
Transaction Java Virtual Machine (JVM) Usage Analysis - Detail

 Tran Userid     TaskNo Stop          Response Dispatch User CPU  KY8 CPU   J8 CPU JVM Elap JVMITime JVM Meth JVMRTime JVM Susp
                        Time           Time     Time     Time     Time     Time     Time     Time     Time     Time     Time
 JDBN CICSUSER     1428 17:26:29.610    .6367    .6036    .1673    .1663    .1652    .6356    .0000    .5990    .0365    .0329
 JDB5 CICSUSER     1429 17:26:30.479    .0866    .0802    .0669    .0659    .0625    .0848    .0000    .0511    .0337    .0063
 JDB7 CICSUSER     1430 17:26:30.720    .0590    .0524    .0400    .0391    .0347    .0573    .0000    .0520    .0053    .0064
 JDBM CICSUSER     1431 17:26:30.836    .0791    .0727    .0616    .0607    .0597    .0782    .0000    .0439    .0343    .0062
 JDB4 CICSUSER     1432 17:26:32.889    .0841    .0775    .0650    .0640    .0608    .0823    .0000    .0482    .0340    .0064
 JDB3 CICSUSER     1433 17:26:33.238    .0537    .0436    .0356    .0347    .0337    .0527    .0000    .0479    .0048    .0100
 JDB5 CICSUSER     1434 17:26:33.341    .0594    .0469    .0374    .0366    .0333    .0571    .0000    .0524    .0047    .0124
 JDB5 CICSUSER     1435 17:26:33.509    .1266    .1125    .0392    .0383    .0349    .1251    .0000    .1197    .0054    .0139
```

Figure 13-22 Performance List report

Because we used workload balancing of method requests, we needed to tie together transactions from both SCSCPJA6 and SCSCPJA7 for a complete picture. The first transaction is JDBN (create) and it is task number 1428. The next task number was 4564. These transactions ran on the different AORs.

We looked at the Performance Summary report (Figure 13-23). The JDBN transaction that corresponds to the bean `create()` method was run 100 times.

```
 V1R3M0                                                CICS Performance Analyzer
                                                          Performance Summary
                                                 ____________________________________________
SUMM0001 Printed at 17:34:42 10/29/2003     Data from 17:26:28 10/29/2003 to 17:31:29 10/29/2003                    Page       1
Transaction Java Virtual Machine (JVM) Usage Analysis - Summary

                      Avg      Avg      Avg      Avg      Avg      Avg      Avg      Avg      Avg      Avg      Avg      Avg
Tran       #Tasks Response Dispatch User CPU  Suspend DispWait  KY8 CPU   J8 CPU JVM Elap JVMITime JVM Meth JVMRTime JVM Susp
                      Time     Time     Time     Time     Time     Time     Time     Time     Time     Time     Time     Time
JDBM          200    .0876    .0719    .0539    .0157    .0005    .0531    .0523    .0861    .0000    .0463    .0398    .0155
JDBN          100    .3256    .3027    .0959    .0229    .0005    .0951    .0942    .3245    .0000    .2804    .0441    .0227
JDB1          100    .0630    .0481    .0291    .0149    .0007    .0283    .0238    .0598    .0000    .0546    .0051    .0147
JDB3          200    .0572    .0366    .0247    .0206    .0010    .0240    .0231    .0559    .0000    .0503    .0056    .0200
JDB4          100    .0935    .0789    .0587    .0146    .0007    .0579    .0547    .0917    .0000    .0511    .0406    .0142
JDB5          400    .0594    .0442    .0297    .0152    .0008    .0289    .0256    .0579    .0000    .0522    .0056    .0150
JDB6          100    .0636    .0475    .0317    .0161    .0007    .0309    .0276    .0612    .0000    .0561    .0051    .0159
JDB7          100    .0640    .0466    .0286    .0174    .0006    .0278    .0233    .0625    .0000    .0579    .0046    .0173
```

Figure 13-23 Performance Summary

Figure 13-24 shows the elapsed time of the JDBM workload. The throughput of the 100 JDBM business transactions was completed in five minutes or a transaction rate of 4 CICS transactions per second (1300 CICS transactions in 300 seconds).

```
 V1R3M0                                                CICS Performance Analyzer
                                                           Performance List
                                                 ____________________________________________________
LIST0001 Printed at 16:53:16 10/31/2003    Data from 17:26:29 10/29/2003                      APPLID SCSCPJA6      Page       1
Transaction Java Virtual Machine (JVM) Usage Analysis - Detail

 Tran Userid     TaskNo Stop         Response Dispatch User CPU  KY8 CPU   J8 CPU JVM Elap JVMITime JVM Meth JVMRTime JVM Susp
                        Time           Time     Time     Time     Time     Time     Time     Time     Time     Time     Time
 JDBN CICSUSER     1428 17:26:29.610    .6367    .6036    .1673    .1663    .1652    .6356    .0000    .5990    .0365    .0329
 JDB5 CICSUSER     5339 17:31:29.635    .0371    .0226    .0158    .0151    .0119    .0355    .0000    .0309    .0045    .0141
│   │   │   │   │   │__________
│   │   │   │   │   │ 00:05:00
```

Figure 13-24 Elapsed time for JDBM workload

We then ran the JVSM transaction workload using a batch workload. We collected the SMF records the same as before, and added the records to the System Definitions for SCSCPJA6 and SCSCPJA7. The first action was to create a new Report Set, called EJBREP3. Again we used the same sample Report Forms JVMLST and JVMSUM, as we used for the SQLJ and JDBC reports. We needed different selection criteria, all transactions JCI* (Figure 13-25).

```
  File  Edit  Object Lists  Options  Help
 ------------------------------------------------------------------------------
                     EJBREP3 - Performance Select Statement  Row 1 of 9 More: >
 Command ===>                                                 Scroll ===> CSR

         Active  --------------- Report Interval ----------------
   Inc   Start   -------- From ---------  --------- To ----------
   Exc   Stop    MM/DD/YYYY  HH:MM:SS.TH  MM/DD/YYYY  HH:MM:SS.TH


 ------------------------------------------------------------------------------

   Inc  Field            --- Value or Range ---   Object
 /  Exc  Name +    Type    Value/From   To          List +
   INC  TRAN             JCI*
```

Figure 13-25 JVSM selection criteria

We submitted the new Report Set. Figure 13-26 shows part of the report.

```
V1R3M0                                          CICS Performance Analyzer
                                                     Performance List
                                                 ____________________________________
LIST0001 Printed at 11:48:00 11/06/2003    Data from 11:37:05 11/06/2003                    APPLID SCSCPJA7      Page       1
CICS PA JVSM List Report

 Tran Userid     TaskNo Stop          Response Dispatch User CPU  KY8 CPU   J8 CPU JVM Elap JVMITime JVM Meth JVMRTime JVM Susp
                        Time           Time     Time     Time     Time     Time     Time     Time     Time     Time     Time
 JCI4 CICSUSER      634 11:37:05.547    .1229    .1075    .0888    .0876    .0876    .1219    .0000    .0669    .0549    .0153
 JCIM CICSUSER      635 11:37:05.776    .1139    .0996    .0872    .0863    .0863    .1129    .0001    .0601    .0527    .0142
 JCI3 CICSUSER      636 11:37:05.858    .0644    .0503    .0428    .0418    .0418    .0636    .0000    .0587    .0049    .0141
 JCI5 CICSUSER      637 11:37:06.095    .0780    .0637    .0447    .0436    .0436    .0769    .0000    .0718    .0051    .0142
 JCIM CICSUSER      638 11:37:06.468    .1155    .1010    .0881    .0870    .0870    .1144    .0000    .0604    .0539    .0144
 JCI5 CICSUSER      639 11:37:06.627    .0705    .0558    .0476    .0466    .0466    .0695    .0000    .0644    .0050    .0146
 JCI4 CICSUSER      640 11:37:08.308    .1183    .1038    .0906    .0894    .0894    .1172    .0000    .0624    .0548    .0144
 JCI3 CICSUSER      641 11:37:08.655    .0664    .0520    .0436    .0426    .0426    .0653    .0000    .0602    .0051    .0142
 JCI5 CICSUSER      642 11:37:08.892    .0895    .0753    .0650    .0639    .0639    .0885    .0000    .0834    .0051    .0141
 JCI1 CICSUSER      643 11:37:09.000    .0679    .0514    .0438    .0427    .0427    .0670    .0000    .0619    .0051    .0164
 JCI7 CICSUSER      644 11:37:09.122    .0846    .0700    .0442    .0432    .0432    .0836    .0000    .0786    .0050    .0145
 JCIM CICSUSER      645 11:37:09.273    .1135    .0982    .0868    .0859    .0859    .1125    .0000    .0583    .0542    .0151
 JCI5 CICSUSER      646 11:37:09.434    .0708    .0540    .0446    .0436    .0436    .0698    .0000    .0645    .0052    .0167
 JCI5 CICSUSER      647 11:37:09.541    .0690    .0531    .0435    .0425    .0425    .0680    .0000    .0630    .0050    .0159
 JCIN CICSUSER      648 11:37:10.996    .1060    .0939    .0825    .0816    .0816    .1050    .0000    .0511    .0539    .0120
 JCI6 CICSUSER      649 11:37:11.251    .1138    .0998    .0882    .0871    .0871    .1127    .0000    .0604    .0523    .0139
 JCI3 CICSUSER      650 11:37:11.434    .0652    .0513    .0435    .0425    .0425    .0643    .0000    .0592    .0051    .0138
 JCI5 CICSUSER      651 11:37:11.543    .0715    .0538    .0458    .0448    .0448    .0705    .0000    .0651    .0054    .0176
 JCI5 CICSUSER      652 11:37:11.651    .0655    .0512    .0432    .0422    .0422    .0645    .0000    .0597    .0048    .0142
 JCI1 CICSUSER      653 11:37:11.760    .0684    .0523    .0442    .0431    .0431    .0675    .0000    .0625    .0050    .0160
 JCI7 CICSUSER      654 11:37:11.866    .0690    .0520    .0438    .0428    .0428    .0682    .0000    .0630    .0052    .0169
 JCIM CICSUSER      655 11:37:12.029    .1259    .1108    .0894    .0883    .0883    .1239    .0000    .0580    .0658    .0141
 JCI5 CICSUSER      656 11:37:12.186    .0659    .0518    .0441    .0432    .0432    .0650    .0000    .0601    .0050    .0140
 JCI5 CICSUSER      657 11:37:12.303    .0792    .0531    .0438    .0428    .0428    .0785    .0001    .0733    .0051    .0261
 JCIN CICSUSER      658 11:37:13.784    .1138    .0949    .0822    .0813    .0813    .1050    .0000    .0504    .0546    .0111
 JCI4 CICSUSER      659 11:37:13.911    .1259    .1111    .0947    .0936    .0936    .1250    .0000    .0656    .0594    .0147
 JCI6 CICSUSER      660 11:37:14.047    .1272    .1132    .0890    .0880    .0880    .1262    .0000    .0595    .0668    .0138
 JCIM CICSUSER      661 11:37:14.150    .1122    .0980    .0851    .0840    .0840    .1111    .0000    .0647    .0464    .0142
 JCI3 CICSUSER      662 11:37:14.237    .0658    .0516    .0449    .0441    .0441    .0649    .0000    .0607    .0042    .0141
 JCI5 CICSUSER      663 11:37:14.345    .0702    .0559    .0470    .0460    .0460    .0692    .0000    .0645    .0046    .0142
 JCI5 CICSUSER      664 11:37:14.459    .0698    .0555    .0468    .0459    .0459    .0688    .0000    .0638    .0050    .0143
 JCI1 CICSUSER      665 11:37:14.576    .0776    .0619    .0503    .0492    .0492    .0767    .0000    .0719    .0048    .0156
 JCI7 CICSUSER      666 11:37:14.692    .0777    .0615    .0525    .0514    .0514    .0766    .0000    .0718    .0048    .0160
```

Figure 13-26 JVSM List Report

Figure 13-27 is the Summary Report for the JVSM transaction run.

```
V1R3M0                                          CICS Performance Analyzer
                                                     Performance Summary
                                                 ____________________________________
SUMM0001 Printed at 11:48:00 11/06/2003     Data from 11:37:05 11/06/2003 to 11:41:46 11/06/2003                    Page       1
CICS PA JVSM Summary Report

                    Avg      Avg      Avg      Avg      Avg      Avg      Avg      Avg      Avg      Avg      Avg      Avg
Tran       #Tasks Response Dispatch User CPU  Suspend DispWait  KY8 CPU   J8 CPU JVM Elap JVMITime JVM Meth JVMRTime JVM Susp
                    Time     Time     Time     Time     Time     Time     Time     Time     Time     Time     Time     Time
JCIM          200   .1212    .1073    .0903    .0139    .0005    .0893    .0893    .1202    .0000    .0661    .0541    .0138
JCIN          100   .1080    .0941    .0788    .0138    .0005    .0778    .0778    .1069    .0000    .0535    .0533    .0136
JCI1          100   .0730    .0574    .0442    .0156    .0006    .0432    .0432    .0721    .0000    .0648    .0073    .0155
JCI3          200   .0729    .0590    .0479    .0139    .0005    .0469    .0469    .0719    .0000    .0663    .0056    .0138
JCI4          100   .1165    .1027    .0876    .0138    .0007    .0865    .0865    .1155    .0000    .0614    .0540    .0136
JCI5          400   .0723    .0586    .0462    .0138    .0005    .0452    .0452    .0714    .0000    .0661    .0053    .0137
JCI6          100   .1170    .1034    .0869    .0136    .0004    .0859    .0859    .1160    .0000    .0616    .0544    .0135
JCI7          100   .0704    .0551    .0439    .0153    .0007    .0429    .0429    .0694    .0000    .0638    .0055    .0152
```

Figure 13-27 JVSM Summary Report

Figure 13-28 shows the elapse time for the JCICS VSAM workload.

```
 V1R3M0                                                CICS Performance Analyzer
                                                           Performance List
                                                 ____________________________________________
LIST0001 Printed at 11:48:00 11/06/2003    Data from 11:37:05 11/06/2003                    APPLID SCSCPJA7      Page       1
CICS PA JVSM List Report

 Tran Userid     TaskNo Stop         Response Dispatch User CPU  KY8 CPU   J8 CPU JVM Elap JVMITime JVM Meth JVMRTime JVM Susp
                        Time           Time     Time     Time     Time     Time     Time     Time     Time     Time     Time
 JCIN CICSUSER      624 11:37:05.412    .1065    .0947    .0780    .0772    .0772    .1056    .0000    .0534    .0522    .0118
 JCI5 CICSUSER     1281 11:41:46.303    .0677    .0534    .0436    .0425    .0425    .0667    .0000    .0611    .0056    .0143
|   |   |   |   |   |____________
|   |   |   |   |   |  00:04:40
```

Figure 13-28 Elapsed time for JVSM transactions

The JVSM workload completed in 4 minutes and 40 seconds or a transaction rate of 5 per second (1300 CICS transactions in 280 seconds).

This scenario demonstrated the use of CICS Performance Analyzer in providing JVM reports for the different enterprise beans. The results were not surprising, since we used only one thread. In the next scenario, we produce a workload on a greater number of threads to see if we can achieve a better performance.

13.3 Multithread enterprise bean scenario

This section describe an enterprise bean performance scenario that is running several EJB clients concurrently. We used the SQLJ, JDBC, and JCICS (VSAM) version of the DistributedTraderAgent enterprise bean to produce relevant performance reports of each enterprise bean application workload.

We used CICSPlex SM Workload Management to balance method call invocations across our AOR regions PJA6 and PJA7. CICSPlex SM is using its distributed routing program EYU9XLOP to dynamically route each single method of the DistributedTraderAgent enterprise bean to the least loaded AOR. A client method call invocation to the stateful DistributedTraderAgent enterprise bean never runs under an existing OTS transaction since we defined a transaction attribute of NotSupported. Therefore, each method call invocation is routed by CICSPlex SM to the most efficient AOR. Refer to *CICS Transaction Server for z/OS Java Applications in CICS*, SC34-6000, for more information about enterprise bean applications in CICS.

See 13.2.2, “Initiating transaction workload” on page 287, where we explain how we associated transaction IDs with enterprise bean methods of the SQLJ, JDBC, and JCICS (VSAM) EJB applications. To measure the performance of enterprise beans in CICS, we monitored the performance data of the IIOP request receiver and request processor transactions. We used three sets of cloned CIRP transactions to monitor each single method call invocation through an associated transaction ID.

13.3.1 Workload generation

We created a Java front-end application (Figure 13-29) that allows to run the Java enterprise bean workload using parallel threads on a client workstation rather than a single threaded sequence of client method calls. The program starts the Windows command files that we used to generate the workload for the sequential enterprise bean scenario.

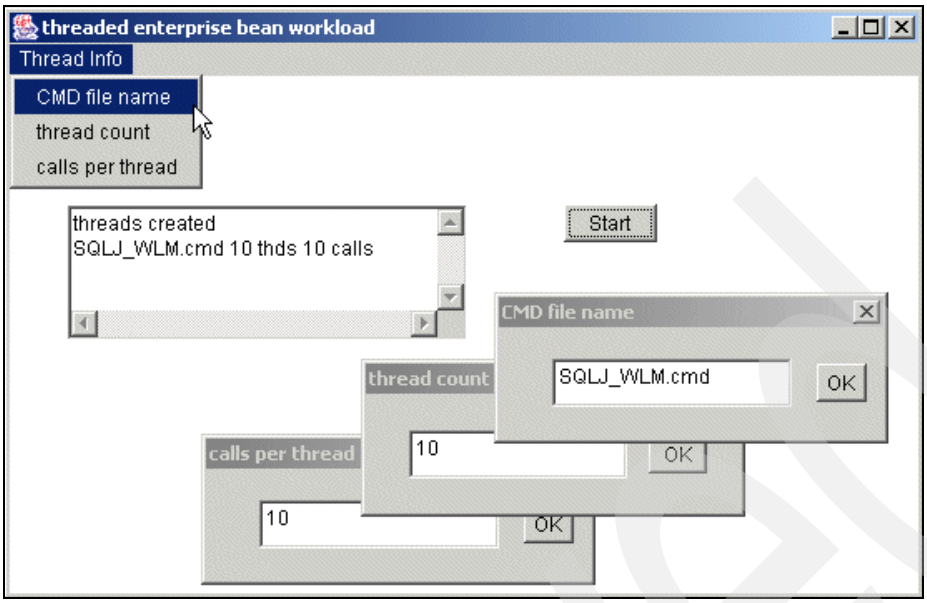

Figure 13-29 Java application to start the workload

Each command file runs in its own thread, which simulates clients that run the enterprise bean application concurrently. The Java front-end program uses three parameters:

- The name of the command file: For this performance scenario, we used the following command files:
  - *SQLJ.cmd* runs the client of the DistributedTraderAgent enterprise bean that is using the SQL API to access its database
  - *JDBC.cmd* runs the client of the DistributedTraderAgent enterprise bean that is using the JDBC API to access its database
  - *JVSM.cmd* runs the client DistributedTraderAgent enterprise bean that is using the JCICS VSAM classes to access its data sets
- The number of threads that should be created
- The number of calls per thread

AORs PJA6 and PJA7 are configured to use 10 JVMs each. Therefore, we decided to run two different workloads per enterprise bean application. For the first run, we executed our Java program and specified the following values:

- SQLJ.cmd
- 10
- 10

We created ten threads. Each thread called the SQLJ.cmd file ten times, which resulted in a total of 100 calls to the SQLJ version of the DistributedTraderAgent enterprise bean. This, in fact, is the same number of calls that we used during the sequential enterprise bean performance scenario. To use more of the available JVMs, we started another workload that used 20 threads and five calls per thread. Again this resulted in a total of 100 calls to the DistributedTraderAgent enterprise bean. We specified the following values:

- SQLJ.cmd
- 20
- 5

We ran both workloads using these above parameters for the SQLJ, JDBC, and JCICS (VSAM) version of the enterprise bean application.

13.3.2 Objectives

We wanted to demonstrate the performance behavior of CICS enterprise bean applications using SQLJ/JDBC in comparison with the same enterprise bean application using JCICS(VSAM). We defined a CICSPlex SM workload specification for distributed routing specifying the default (QUEUE) algorithm. We expected CICSPlex SM to do dynamic distributed routing of method call invocations to the AOR region that has the shortest execution queues.

We calculated the time that was needed to complete the workload of 100 calls to the DistributedTraderAgent enterprise bean. We used CICS Performance Analyzer reports to show the enterprise bean performance when using 10 or 20 threads to complete the workload.

13.3.3 Running the SQLJ workload

We started the workload that calls the SQLJ version of the DistributedTraderAgent enterprise bean using 10 threads and 10 calls per thread. The workload finished after about 1.5 minutes. To collect all relevant SMF records, we flushed the CICS monitoring buffers and issued an /I SMF command to switch SMF data sets. When the SMF data set was archived, we performed the following steps to create the performance summary reports shown in Figure 13-30 and Figure 13-31:

1. Use the Take-Up for SMF function to update AORs PJA6 and PJA7.
2. Create a new Report Set in order to create a summary report.
3. Use sample Report Form JVMSUM to format relevant performance fields for JVMs.
4. Specify a Performance select statement to include a report interval that covers the test interval.
5. Run the report.

When we looked at the reports shown in Figure 13-30 and Figure 13-31, we found that CICSPlex SM routed more transactions to AOR PJA7.

The EJB client calls the DistributedTraderAgent enterprise bean 13 times. To monitor the request stream and request processor transactions, we associated a transaction ID to each method of the bean. One client performs 13 method calls multiplied by 100 clients, resulting in 1300 transactions per workload. AOR PJA6 executed 383 transactions when PJA7 processed 1017 transactions.

```
V1R3M0                                                  CICS Performance Analyzer
                                                             Performance Summary
                                                 ____________________________________________
 SUMM0001 Printed at 12:13:32 10/29/2003     Data from 11:05:00 10/29/2003 to 11:38:06 10/29/2003                    Page       1
 Transaction Java Virtual Machine (JVM) Usage Analysis - Summary

                        Avg       Avg      Avg      Avg      Avg      Avg      Avg      Avg      Avg      Avg      Avg      Avg
 Tran       #Tasks Response Dispatch User CPU  Suspend DispWait  KY8 CPU   J8 CPU JVM Elap JVMITime JVM Meth JVMRTime JVM Susp
                        Time     Time     Time     Time     Time     Time     Time     Time     Time     Time     Time     Time
 SQLM           61    .1246    .0959    .0521    .0287    .0064    .0514    .0506    .1231    .0000    .0680    .0550    .0278
 SQLN           36    .4498    .4259    .1228    .0239    .0058    .1221    .1214    .4483    .0000    .3834    .0649    .0230
 SQL1           28    .1280    .0954    .0587    .0326    .0108    .0580    .0538    .1258    .0000    .1147    .0111    .0318
 SQL3           57    .6022    .5756    .0890    .0266    .0075    .0884    .0876    .5969    .2939    .2935    .0095    .0258
 SQL4           21    .1561    .1231    .0666    .0330    .0086    .0659    .0630    .1495    .0000    .0873    .0622    .0315
 SQL5          121    .0919    .0581    .0294    .0337    .0125    .0287    .0258    .0896    .0000    .0814    .0082    .0328
 SQL6           25    .1230    .0879    .0356    .0351    .0103    .0349    .0315    .1209    .0000    .1136    .0073    .0343
 SQL7           34   1.1405   1.1075    .1396    .0329    .0153    .1390    .1347   1.1316    .5550    .5657    .0110    .0318
******************************** BOTTOM OF DATA ********************************************************************************
```

Figure 13-30 AOR PJA6 using 10 threads and 10 calls per thread

```
V1R3M0                                                  CICS Performance Analyzer
                                                             Performance Summary
                                                 ____________________________________________
SUMM0001 Printed at 12:20:05 10/29/2003     Data from 11:36:49 10/29/2003 to 11:38:08 10/29/2003                    Page       1
Transaction Java Virtual Machine (JVM) Usage Analysis - Summary

                        Avg       Avg      Avg      Avg      Avg      Avg      Avg      Avg      Avg      Avg      Avg      Avg
Tran       #Tasks Response Dispatch User CPU  Suspend DispWait  KY8 CPU   J8 CPU JVM Elap JVMITime JVM Meth JVMRTime JVM Susp
                        Time     Time     Time     Time     Time     Time     Time     Time     Time     Time     Time     Time
SQLM          139    .1138    .0865    .0480    .0273    .0061    .0474    .0466    .1111    .0000    .0580    .0531    .0252
SQLN           64    .3211    .3029    .0757    .0182    .0047    .0751    .0744    .3195    .0000    .2599    .0596    .0175
SQL1           72    .0845    .0503    .0250    .0342    .0110    .0243    .0199    .0818    .0000    .0712    .0106    .0329
SQL3          143    .3123    .2849    .0455    .0274    .0058    .0448    .0441    .3076    .1347    .1626    .0104    .0264
SQL4           79    .4906    .4535    .1027    .0371    .0126    .1020    .0991    .4807    .1644    .2667    .0496    .0331
SQL5          279    .0809    .0496    .0248    .0313    .0099    .0242    .0211    .0782    .0000    .0683    .0098    .0303
SQL6           75    .0788    .0529    .0268    .0259    .0085    .0261    .0228    .0767    .0000    .0641    .0126    .0250
SQL7           66    .0918    .0600    .0264    .0318    .0103    .0258    .0214    .0885    .0000    .0791    .0093    .0298
******************************** BOTTOM OF DATA ********************************************************************************
```

Figure 13-31 AOR PJA7 using 10 threads and 10 calls per thread

When the workload completed, we entered the CEMT I JVM command. We found that PJA6 was using seven JVMs while PJA7 was just using three JVMs. We assumed that PJA6 was busy building additional serially reusable JVMs which lead to longer transaction queues and response times. CICSPlex SM took that into account for its routing decision and started to route more workload to PJA7. CICSPlex SM does not spread the workload evenly. The entire workload could be routed to one CICS system in a CICSplex if it stayed within its goals and continued being the most efficient CICS region. If the workload made 500 calls to the enterprise bean rather than 100 calls, then PJA6 would probably catch up to PJA7 quickly.

We started the same workload again using 20 threads and five calls per thread, which again started 100 calls to the SQLJ version of the DistributedTraderAgent enterprise bean. We repeated the steps that we described earlier to create a performance summary report for PJA6 and PJA7 (Figure 13-32 and Figure 13-33).

```
V1R3M0                                                CICS Performance Analyzer
                                                          Performance Summary
                                                 ____________________________________________
SUMM0001 Printed at 17:49:20 10/29/2003     Data from 11:07:43 10/29/2003 to 12:07:54 10/29/2003                    Page       1
Transaction Java Virtual Machine (JVM) Usage Analysis - Summary

                      Avg       Avg      Avg      Avg      Avg      Avg      Avg      Avg      Avg     Avg       Avg      Avg
Tran       #Tasks Response Dispatch User CPU  Suspend DispWait  KY8 CPU   J8 CPU JVM Elap JVMITime JVM Meth JVMRTime JVM Susp
                      Time     Time     Time     Time     Time     Time     Time     Time     Time     Time     Time     Time
SQLM           31   2.2308   2.1184    .1788    .1125    .0411    .1781    .1774   2.1774   1.0735    .9270    .1769    .1066
SQLN           16   4.5143   4.4616    .3467    .0527    .0287    .3461    .3453   4.4876   2.2283   2.1032    .1562    .0494
SQL1           16    .2312    .1384    .0257    .0927    .0664    .0250    .0204    .2261    .0000    .1566    .0695    .0892
SQL3           41    .2085    .1019    .0245    .1066    .0436    .0238    .0230    .1956    .0000    .1568    .0388    .0946
SQL4           19   3.4753   3.3043    .2528    .1704    .1010    .2521    .2491   3.4522   1.5664   1.6637    .2221    .1647
SQL5           64   1.1534   1.0292    .0861    .1242    .0746    .0854    .0824   1.1411    .5518    .5607    .0286    .1194
SQL6           23   2.7519   2.6145    .2017    .1374    .0689    .2010    .1975   2.6872   1.2425   1.4043    .0403    .1335
SQL7           13    .2237    .1116    .0258    .1120    .0717    .0252    .0205    .2143    .0000    .1742    .0401    .1047
```

Figure 13-32 AOR PJA6 using 20 threads and five calls per thread

```
V1R3M0                                                CICS Performance Analyzer
                                                          Performance Summary
                                                 ____________________________________________
SUMM0001 Printed at 17:51:08 10/29/2003     Data from 11:27:19 10/29/2003 to 11:58:47 10/29/2003                    Page       1
Transaction Java Virtual Machine (JVM) Usage Analysis - Summary

                      Avg       Avg      Avg      Avg      Avg      Avg      Avg      Avg      Avg     Avg       Avg      Avg
Tran       #Tasks Response Dispatch User CPU  Suspend DispWait  KY8 CPU   J8 CPU JVM Elap JVMITime JVM Meth JVMRTime JVM Susp
                      Time     Time     Time     Time     Time     Time     Time     Time     Time     Time     Time     Time
SQLM          169    .2746    .1550    .0432    .1196    .0243    .0425    .0417    .2060    .0000    .0848    .1211    .0517
SQLN           84    .6339    .5718    .0921    .0620    .0163    .0914    .0907    .6010    .0000    .4948    .1061    .0300
SQL1           84    .1827    .0653    .0212    .1174    .0389    .0206    .0162    .1291    .0000    .1089    .0201    .0652
SQL3          159    .1693    .0526    .0164    .1167    .0233    .0157    .0149    .1081    .0000    .0899    .0182    .0563
SQL4           81    .3852    .2478    .0598    .1373    .0452    .0591    .0562    .3273    .0000    .2112    .1160    .0808
SQL5          336    .1717    .0599    .0206    .1118    .0315    .0199    .0169    .1154    .0000    .0969    .0184    .0573
SQL6           77    .2344    .0629    .0198    .1714    .0401    .0191    .0157    .1494    .0000    .1289    .0206    .0892
SQL7           87    .2190    .0904    .0316    .1286    .0466    .0309    .0264    .1654    .0000    .1411    .0243    .0763
****************************** BOTTOM OF DATA ******************************************************************************
```

Figure 13-33 AOR PJA7 using 20 threads and five calls per thread

When we looked at the performance reports that we created, we found that response times did not improve at all. AOR PJA6 processed 223 transactions while AOR PJA7 processed 1077 transactions. We checked the number of JVMs that we created and found that PJA6 was using ten JVMs, which is the maximum. PJA7 was using five JVMs. Therefore, the average response time of PJA6 was influenced by method call invocations that were suspended waiting for JVM initialization. After the serially reusable JVM was built, response times improved dramatically.

We used a performance list report (Figure 13-34 and Figure 13-35) to select the first and last task number of the workload. Then we used the time stamps to calculate the time that the workload needed to complete. Using 10 threads took 78 seconds to complete 1300 method call invocations. That is an average of 17 transactions per second. The workload that was using 20 threads took 5 seconds longer, which is 83 seconds. This is a throughput of 17 transactions per second.

```
V1R3M0                                                CICS Performance Analyzer
                                                           Performance List
                                                 ____________________________________________
LIST0001 Printed at 15:12:06 10/29/2003    Data from 11:39:50 10/29/2003                APPLID SCSCPJA7      Page       1
Transaction Java Virtual Machine (JVM) Usage Analysis - Detail

 Tran Userid     TaskNo Stop         Response Dispatch User CPU  KY8 CPU   J8 CPU JVM Elap JVMITime JVM Meth JVMRTime JVM Susp
                        Time           Time     Time     Time     Time     Time     Time     Time     Time     Time     Time
 SQLN CICSUSER     9645 11:39:50.683    .4234    .4117    .0649    .0642    .0633    .4227    .0000    .3853    .0373    .0116
 SQL5 CICSUSER    10721 11:41:13.794    .0395    .0251    .0193    .0187    .0154    .0382    .0000    .0331    .0051    .0143
                        ____________
                        00:01:23
```

Figure 13-34 Transactions per second: 20 threads

```
V1R3M0                                                CICS Performance Analyzer
                                                           Performance List
                                                 ____________________________________________
LIST0001 Printed at 15:38:29 10/29/2003    Data from 11:36:50 10/29/2003                APPLID SCSCPJA7      Page       1
Transaction Java Virtual Machine (JVM) Usage Analysis - Detail

 Tran Userid     TaskNo Stop         Response Dispatch User CPU  KY8 CPU   J8 CPU JVM Elap JVMITime JVM Meth JVMRTime JVM Susp
                        Time           Time     Time     Time     Time     Time     Time     Time     Time     Time     Time
 SQLN CICSUSER     8728 11:36:50.149    .3721    .3555    .0619    .0612    .0606    .3518    .0000    .2111    .1407    .0164
 SQL5 CICSUSER     9644 11:38:08.902    .0378    .0229    .0177    .0170    .0133    .0364    .0000    .0310    .0053    .0148
                        ____________
                        00:01:18
```

Figure 13-35 Transaction per second 10 threads

13.3.4 Running the JDBC workload

To see a comparison with JDBC and SQLJ versions of the DistributedTraderAgent enterprise bean, we started another workload using the Java program that we created earlier. We specified the following values:

- JDBC_WLM.cmd
- 10
- 10

This setup again starts the client code for the JDBC enterprise bean 100 times in total. We used 10 threads using 10 calls per thread, which simulated 10 EJB clients running concurrently.

When the workload finished, we flushed the CICS monitoring buffers and switched SMF data sets using the /I SMF command. When the SMF data set was archived, we performed the following steps to create a performance summary report for both AORs PJA6 and PJA7:

1. Use the Take-Up from SMF function to update the system definition with new SMF data.
2. Create a new system group for both AORs PJA6 and PJA7.
3. Reuse the Report Set that you used for the SQL workload.
4. Edit the report interval information in the Performance select statement.
5. Run the report.

We used the performance list report to select the first and last task number of the workload (Figure 13-36 and Figure 13-37).

```
 V1R3M0                                                CICS Performance Analyzer
                                                          Performance Summary
                                                 ____________________________________________
SUMM0001 Printed at 16:11:59 10/29/2003     Data from 11:59:29 10/29/2003 to 12:01:19 10/29/2003                    Page       1
Transaction Java Virtual Machine (JVM) Usage Analysis - Summary

                      Avg       Avg      Avg      Avg      Avg      Avg      Avg      Avg      Avg     Avg       Avg      Avg
Tran       #Tasks Response Dispatch User CPU  Suspend DispWait  KY8 CPU   J8 CPU JVM Elap JVMITime JVM Meth JVMRTime JVM Susp
                      Time     Time     Time     Time     Time     Time     Time     Time     Time     Time      Time     Time
JDBM          200    .1849    .1502    .0646    .0346    .0072    .0639    .0631    .1833    .0000    .1231     .0602    .0338
JDBN          100   1.3104   1.1317    .0913    .1787    .0097    .0907    .0899   1.1915    .0114    .9315     .2486    .0659
JDB1          100    .0970    .0533    .0241    .0437    .0119    .0234    .0191    .0949    .0000    .0886     .0064    .0429
JDB3          200    .0855    .0485    .0225    .0370    .0080    .0219    .0211    .0842    .0000    .0775     .0067    .0362
JDB4          100    .1722    .1133    .0525    .0589    .0163    .0518    .0489    .1690    .0000    .1078     .0611    .0577
JDB5          400    .0894    .0442    .0232    .0451    .0101    .0225    .0196    .0873    .0000    .0808     .0064    .0443
JDB6          100    .1035    .0622    .0264    .0413    .0107    .0258    .0227    .1011    .0000    .0947     .0064    .0403
JDB7          100    .0920    .0569    .0273    .0350    .0095    .0267    .0223    .0891    .0000    .0806     .0085    .0344
```

Figure 13-36 Both AORs: 10 threads 10 calls per thread

```
V1R3M0                                                CICS Performance Analyzer
                                                          Performance Summary
                                                 ____________________________________________
SUMM0001 Printed at 17:38:06 10/29/2003     Data from 11:36:27 10/29/2003 to 12:57:33 10/29/2003                    Page       1
Transaction Java Virtual Machine (JVM) Usage Analysis - Summary

                      Avg       Avg      Avg      Avg      Avg      Avg      Avg      Avg      Avg     Avg       Avg      Avg
Tran       #Tasks Response Dispatch User CPU  Suspend DispWait  KY8 CPU   J8 CPU JVM Elap JVMITime JVM Meth JVMRTime JVM Susp
                      Time     Time     Time     Time     Time     Time     Time     Time     Time     Time      Time     Time
JDBM          200    .4032    .2486    .0486    .1544    .0485    .0480    .0472    .3376    .0000    .1628     .1748    .0896
JDBN          100    .7467    .6325    .0873    .1142    .0395    .0866    .0859    .7011    .0000    .5405     .1606    .0695
JDB1          100    .2517    .0962    .0230    .1554    .0625    .0224    .0180    .2100    .0000    .1890     .0209    .1149
JDB3          200    .2397    .0916    .0186    .1481    .0494    .0180    .0172    .1775    .0000    .1525     .0250    .0866
JDB4          100    .5390    .3088    .0600    .2301    .0894    .0592    .0563    .4348    .0000    .2586     .1761    .1278
JDB5          400    .2316    .0833    .0214    .1483    .0595    .0208    .0178    .1811    .0000    .1592     .0219    .0991
JDB6          100    .2670    .0938    .0205    .1731    .0710    .0198    .0168    .1974    .0000    .1748     .0226    .1050
JDB7          100    .2572    .0951    .0225    .1621    .0680    .0218    .0174    .1944    .0000    .1690     .0253    .1008
```

Figure 13-37 Both AORs: 20 threads 5 calls per thread

We used the time stamps to calculate the time that the workload needed to complete (Figure 13-38 and Figure 13-39). Using 10 threads took 78 seconds to complete 1300 method call invocations. That is an average of 17 transactions per second. The workload that used 20 threads took 75 seconds. This is the throughput of 17 transactions per second.

```
V1R3M0                                                CICS Performance Analyzer
                                                          Performance List
                                                 ____________________________________________
LIST0001 Printed at 16:39:29 10/29/2003     Data from 12:03:11 10/29/2003                    APPLID SCSCPJA7      Page       1
Transaction Java Virtual Machine (JVM) Usage Analysis - Detail

 Tran Userid      TaskNo Stop          Response Dispatch User CPU  KY8 CPU   J8 CPU JVM Elap JVMITime JVM Meth JVMRTime JVM Susp
                         Time           Time     Time     Time     Time     Time     Time     Time     Time     Time      Time
 JDBN CICSUSER     11403 12:03:11.185    .2333    .2216    .0550    .0543    .0535    .2322    .0000    .1965    .0356     .0115
 JDB5 CICSUSER     12146 12:04:26.361    .0948    .0488    .0142    .0134    .0108    .0910    .0002    .0662    .0246     .0458

                         ________
                         00:01:15
```

Figure 13-38 Transactions per second: 20 threads

```
V1R3M0                                                CICS Performance Analyzer
                                                           Performance List
                                                 ____________________________________________
LIST0001 Printed at 16:20:45 10/29/2003    Data from 11:59:57 10/29/2003                APPLID SCSCPJA6      Page       1
Transaction Java Virtual Machine (JVM) Usage Analysis - Detail

 Tran Userid     TaskNo Stop         Response Dispatch User CPU  KY8 CPU   J8 CPU JVM Elap JVMITime JVM Meth JVMRTime JVM Susp
                        Time           Time     Time     Time     Time     Time     Time     Time     Time     Time     Time
 JDBN CICSUSER     4842 11:59:57.522    .9726    .9585    .2510    .2504    .2496    .9719    .0000    .9336    .0382    .0139
 JDB5 CICSUSER     5463 12:01:15.939    .0389    .0236    .0179    .0173    .0140    .0376    .0000    .0345    .0031    .0152
                        ____________
                        00:01:18
```

Figure 13-39 Transactions per second: 10 threads

13.3.5 Running the JCICS (VSAM) workload

We started the JCICS (VSAM) version of the DistributedTraderAgent enterprise bean. We started another workload using the Java program that we created earlier. We specified the following values:

- JVSM_WLM.cmd
- 10
- 10

This started the client code for the JCICS (VSAM) enterprise bean 100 times in total. We are used 10 threads, with 10 calls per thread, simulating 10 EJB clients running concurrently.

When the workload finished, we flushed the CICS monitoring buffers and switched SMF data sets using the /I SMF command. When the SMF data set was archived, we performed the following steps to create a performance summary report for both AORs PJA6 and PJA7:

1. Use the Take-Up from SMF function to update the system definition with new SMF data.
2. Create a new system group for both AORs PJA6 and PJA7.
3. Reuse the Report Set we were using for the SQL workload.
4. Edit the report interval information in the Performance select statement.
5. Run the report.

We used the Performance List report to select the first and last task number of the workload (Figure 13-40 and Figure 13-41).

```
 V1R3M0                                               CICS Performance Analyzer
                                                          Performance Summary
                                                 ____________________________________________
SUMM0001 Printed at 13:23:04 11/06/2003     Data from 13:19:33 11/06/2003 to 13:20:45 11/06/2003                Page       1
CICS PA JVSM Summary Report

                     Avg       Avg       Avg       Avg       Avg       Avg       Avg       Avg       Avg       Avg       Avg       Avg
Tran       #Tasks Response Dispatch User CPU  Suspend DispWait  KY8 CPU   J8 CPU JVM Elap JVMITime JVM Meth JVMRTime JVM Susp
                     Time      Time      Time      Time      Time      Time      Time      Time      Time      Time      Time      Time
JCIM          200   .1870     .1582     .0762     .0288     .0076     .0752     .0752     .1848     .0000     .1364     .0484     .0278
JCIN          100   .1451     .1271     .0649     .0180     .0045     .0640     .0640     .1417     .0000     .0970     .0447     .0173
JCI1          100   .1555     .1245     .0689     .0310     .0075     .0679     .0679     .1538     .0000     .1470     .0068     .0303
JCI3          200   .1376     .1047     .0516     .0329     .0068     .0507     .0507     .1355     .0000     .1284     .0072     .0320
JCI4          100   .1839     .1504     .0770     .0335     .0117     .0759     .0759     .1820     .0000     .1312     .0507     .0327
JCI5          400   .1353     .1039     .0478     .0314     .0073     .0468     .0468     .1330     .0000     .1252     .0078     .0303
JCI6          100   .1962     .1642     .0757     .0320     .0088     .0747     .0747     .1939     .0000     .1341     .0597     .0309
JCI7          100   .1448     .1135     .0559     .0313     .0090     .0549     .0549     .1426     .0000     .1354     .0071     .0305
```

Figure 13-40 Both AORs: 10 threads, 10 calls per thread

```
 V1R3M0                                                CICS Performance Analyzer
                                                          Performance Summary
                                                 ____________________________________________
SUMM0001 Printed at 13:36:01 11/06/2003     Data from 13:32:30 11/06/2003 to 13:33:38 11/06/2003                    Page       1
CICS PA JVSM Summary Report

                      Avg       Avg      Avg      Avg      Avg      Avg      Avg      Avg      Avg     Avg       Avg      Avg
Tran       #Tasks Response Dispatch User CPU  Suspend DispWait  KY8 CPU   J8 CPU JVM Elap JVMITime JVM Meth JVMRTime JVM Susp
                      Time     Time     Time     Time     Time     Time     Time     Time     Time     Time     Time     Time
JCIM          200    .1990    .1597    .0708    .0393    .0111    .0699    .0699    .1906    .0000    .1258    .0647    .0319
JCIN          100    .1622    .1298    .0726    .0325    .0053    .0718    .0718    .1490    .0000    .1005    .0485    .0206
JCI1          100    .1685    .1120    .0472    .0565    .0114    .0462    .0462    .1553    .0000    .1470    .0083    .0447
JCI3          200    .1702    .1306    .0445    .0396    .0098    .0436    .0436    .1670    .0000    .1569    .0100    .0378
JCI4          100    .2720    .2192    .0714    .0528    .0136    .0703    .0703    .2565    .0000    .1975    .0590    .0387
JCI5          400    .1261    .0974    .0467    .0287    .0067    .0458    .0458    .1241    .0000    .1178    .0063    .0278
JCI6          100    .2249    .1902    .0741    .0347    .0073    .0732    .0732    .2231    .0000    .1690    .0541    .0340
JCI7          100    .1370    .0988    .0449    .0382    .0094    .0439    .0439    .1352    .0000    .1230    .0122    .0376
```

Figure 13-41 Both AORs: 20 threads, 5 calls per thread

We used the time stamps to calculate the time that the workload needed to complete. Figure 13-42 shows that the JVSM transaction workload took 1 minutes and 11 seconds to complete when running with 10 threads or a transaction rate of 18 per second.

```
V1R3M0                                                CICS Performance Analyzer
                                                          Performance List
                                                 ____________________________________________
LIST0001 Printed at 13:23:04 11/06/2003    Data from 13:19:34 11/06/2003                    APPLID SCSCPJA6      Page       1
CICS PA JVSM List Report

 Tran Userid     TaskNo Stop          Response Dispatch User CPU  KY8 CPU   J8 CPU JVM Elap JVMITime JVM Meth JVMRTime JVM Susp
                        Time            Time     Time     Time     Time     Time     Time     Time     Time     Time     Time
 JCIN CICSUSER     2336 13:19:34.198    .0755    .0638    .0532    .0523    .0523    .0743    .0000    .0478    .0265    .0116
 JCI5 CICSUSER     2977 13:20:45.569    .0623    .0439    .0355    .0347    .0347    .0615    .0000    .0581    .0034    .0183
|   |   |   |   |   |____________
|   |   |   |   |   |  00:01:11
```

Figure 13-42 Transactions per second: 10 threads

Figure 13-43 shows that the JVSM transaction workload took 1 minutes and 8 seconds to complete when running with 20 threads or a transaction rate of 19 transactions per second.

```
V1R3M0                                                CICS Performance Analyzer
                                                          Performance List
                                                 ____________________________________________
LIST0001 Printed at 13:36:01 11/06/2003    Data from 13:32:30 11/06/2003                    APPLID SCSCPJA7      Page       1
CICS PA JVSM List Report

 Tran Userid     TaskNo Stop          Response Dispatch User CPU  KY8 CPU   J8 CPU JVM Elap JVMITime JVM Meth JVMRTime JVM Susp
                        Time            Time     Time     Time     Time     Time     Time     Time     Time     Time     Time
 JCIN CICSUSER     2857 13:32:30.527    .1085    .0947    .0660    .0650    .0650    .1074    .0000    .0732    .0342    .0137
 JCI5 CICSUSER     3689 13:33:38.646    .0574    .0428    .0353    .0345    .0345    .0567    .0000    .0528    .0038    .0145
|   |   |   |   |   |____________
|   |   |   |   |   |  00:01:08
```

Figure 13-43 Transactions per second: 20 threads

We then ran a mixed workload consisting of SQLJ, JDBC and JVSM transactions. We used 10 threads and ran 10 transactions of each enterprise bean on each thread, for total of 300 business transactions or, when broken down into method call transactions, a total of 3900.

To produce the CICS Performance Analyzer report for this run of the mixed transactions, we wanted to create an Object List containing the three types of transactions. We called the Object List EJBTRAN and added the transactions that we wanted to select. Figure 13-44 shows the selections we made.

```
  File  Edit  Confirm  Options  Help
--------------------------------------------------------------------------------
                        EDIT Object List - EJBTRAN            Row 1 to 3 of 3
Command ===>                                                 Scroll ===> CSR

Description  . . . . CICS PA Object List

Specify the Object List values:

/   1st Value   2nd Value   Sublist
    SQL*
    JDB*
    JCI*
```

Figure 13-44 Object List selection

We added the Object List to the Performance select statements for both the List and Summary reports. Figure 13-45 shows the Object List being used in the Performance Select Statement screen.

```
  File  Edit  Object Lists  Options  Help
--------------------------------------------------------------------------------
                    EJBREP4 - Performance Select Statement  Row 1 of 9 More: >
Command ===>                                                 Scroll ===> CSR

         Active  --------------- Report Interval ----------------
   Inc   Start   -------- From ---------  --------- To ----------
   Exc   Stop    MM/DD/YYYY  HH:MM:SS.TH  MM/DD/YYYY  HH:MM:SS.TH


--------------------------------------------------------------------------------

   Inc  Field             --- Value or Range ---   Object
/  Exc  Name +    Type    Value/From   To          List +
   INC  TRAN                                       EJBTRAN
```

Figure 13-45 Performance Select Statement screen

Figure 13-46 shows the CICS Performance Analyzer Performance Summary report.

```
V1R3M0                                                CICS Performance Analyzer
                                                          Performance Summary
                                                 ____________________________________________
SUMM0001 Printed at 11:15:12 11/07/2003     Data from 11:07:46 11/07/2003 to 11:11:47 11/07/2003                    Page       1
Transaction Java Virtual Machine (JVM) Usage Analysis - Summary

                      Avg       Avg      Avg      Avg      Avg      Avg      Avg      Avg      Avg      Avg       Avg      Avg
Tran       #Tasks Response Dispatch User CPU  Suspend DispWait  KY8 CPU   J8 CPU JVM Elap JVMITime JVM Meth JVMRTime JVM Susp
                      Time     Time     Time     Time     Time     Time     Time     Time     Time     Time      Time     Time
JCIM          200    .1469    .1225    .0762    .0244    .0054    .0753    .0753    .1451    .0000    .0875     .0576    .0236
JCIN          100    .1489    .1254    .0730    .0235    .0047    .0722    .0722    .1472    .0000    .0838     .0633    .0228
JCI1          100    .1142    .0848    .0444    .0294    .0060    .0435    .0435    .1123    .0000    .1055     .0067    .0286
JCI3          200    .1127    .0862    .0447    .0265    .0060    .0438    .0438    .1102    .0000    .1030     .0072    .0256
JCI4          100    .1713    .1419    .0846    .0293    .0077    .0836    .0836    .1697    .0000    .1038     .0659    .0287
JCI5          400    .1042    .0796    .0436    .0247    .0052    .0427    .0427    .1025    .0000    .0950     .0075    .0240
JCI6          100    .1673    .1409    .0793    .0264    .0063    .0783    .0783    .1657    .0000    .1025     .0632    .0257
JCI7          100    .1026    .0756    .0453    .0271    .0055    .0443    .0443    .1011    .0000    .0948     .0062    .0264
JDBM          200    .1666    .1422    .0835    .0244    .0063    .0826    .0817    .1640    .0000    .1011     .0629    .0235
JDBN          100    .5527    .5250    .1369    .0277    .0058    .1360    .1352    .5504    .0000    .4836     .0668    .0269
JDB1          100    .1266    .0932    .0515    .0334    .0107    .0506    .0461    .1237    .0000    .1172     .0065    .0325
JDB3          200    .1070    .0818    .0436    .0252    .0063    .0426    .0418    .1029    .0000    .0946     .0082    .0244
JDB4          100    .1712    .1382    .0814    .0330    .0120    .0805    .0775    .1682    .0000    .1067     .0615    .0317
JDB5          400    .1256    .0986    .0519    .0270    .0088    .0510    .0479    .1232    .0000    .1139     .0093    .0262
JDB6          100    .1732    .1477    .0863    .0255    .0087    .0854    .0821    .1703    .0000    .1099     .0604    .0243
JDB7          100    .1308    .1002    .0499    .0307    .0125    .0489    .0444    .1276    .0000    .1196     .0080    .0295
SQLM          200    .1885    .1639    .0820    .0246    .0068    .0811    .0803    .1842    .0000    .1245     .0597    .0218
SQLN          100    .3533    .3262    .1311    .0271    .0049    .1302    .1294    .3512    .0000    .2843     .0669    .0263
SQL1          100    .1600    .1259    .0509    .0341    .0105    .0500    .0455    .1518    .0000    .1436     .0082    .0288
SQL3          200    .1444    .1168    .0490    .0276    .0074    .0481    .0473    .1404    .0000    .1297     .0107    .0251
SQL4          100    .2016    .1712    .0841    .0304    .0123    .0831    .0801    .1972    .0000    .1384     .0588    .0282
SQL5          400    .1491    .1202    .0500    .0289    .0105    .0491    .0460    .1454    .0000    .1354     .0100    .0273
SQL6          100    .2045    .1749    .0812    .0296    .0108    .0802    .0767    .1968    .0000    .1351     .0617    .0277
SQL7          100    .1498    .1172    .0518    .0325    .0122    .0508    .0464    .1450    .0000    .1363     .0087    .0295
```

Figure 13-46 Total run summary report

To calculate the elapsed time, we used the Performance List report (Figure 13-47). Here, we ran all the transactions in 4 minutes. We reached throughput of 16 transactions per second.

```
 V1R3M0                                               CICS Performance Analyzer
                                                          Performance List
                                                 ____________________________________________
LIST0001 Printed at 11:15:12 11/07/2003    Data from 11:07:46 11/07/2003                        APPLID SCSCPJA6      Page       1
Transaction Java Virtual Machine (JVM) Usage Analysis - Detail

 Tran Userid     TaskNo Stop          Response Dispatch User CPU  KY8 CPU   J8 CPU JVM Elap JVMITime JVM Meth JVMRTime JVM Susp
                        Time            Time     Time     Time     Time     Time     Time     Time     Time      Time     Time
 SQLN CICSUSER     2710 11:07:46.745    .3102    .2787    .1206    .1196    .1187    .3091    .0000    .2694     .0396    .0314
 JCI5 CICSUSER     4600 11:11:47.616    .0636    .0489    .0410    .0400    .0400    .0627    .0000    .0588     .0039    .0146
|   |   |   |   |   |_____________
|   |   |   |   |   |   00:04:00
```

Figure 13-47 Transactions per second: 10 threads

13.4 Conclusion

CICS Performance Analyzer proved useful in providing reports on the use of JVMs in a CICS environment. From the CICS PA reports, in these runs, the JVSM transaction performed slightly better than the SQLJ and JDBC transactions. However, we did not see noticeable difference in performance between SQLJ and JDBC versions of our application. The reason may be that we did not customize the SQLJ default serializable profiles on z/OS, assuming that it was done in an earlier ITSO project when the application was developed. By default, if you run an SQLJ program with an uncustomized profile, SQL calls are mapped to pure JDBC calls at run time. Since there is no easy way to check whether the JAR file contains customized or uncustomized profiles, we decided not to investigate this issue further.

14

Application Naming support

Application Naming support allows you to exercise greater control over the identification and collection of performance data. It allows more granularity over a “transaction ID” since it allows you to specify an alternate transaction ID. This way you can relate individual transactions into a single application name or to separate different linked programs that run under one common transaction ID as different transactions.

A good reason to do so can be an application that starts from one common menu. Depending on the selected option, a different program is run. On entry into each program, you can assign a different alternate transaction code for the execution of this program. With CICS Performance Analyzer (PA), you can select this alternate transaction code instead of using the common transaction ID.

This chapter discusses the Application Naming support introduced by CICS Transaction Server (TS) V2.2 authorized program analysis report (APAR) PQ63143. The equivalent CICS TS V1.3 APAR is PQ63141. For a description of Transaction Resource Monitoring support also introduced by these APARs, refer to 6.7, “Transaction Resource Monitoring” on page 163. For the complete list of enabling program temporary fixes (PTFs), refer to Table 2-1 on page 26.

14.1 Implementing Application Naming support

A new parameter, APPLNAME={NO | YES}, is added to the DFHMCT TYPE=INITIAL macro. The APPLNAME option specifies whether you want to use the application support provided by CICS monitoring. This is an enabling function that allows application programs to invoke special CICS event monitoring points called DFHAPPL.1 and DFHAPPL.2.

When you specify APPLNAME=YES, two macros (see Example 14-1) are internally generated.

Example 14-1 Internal generated event monitoring points (EMPs) with APPLNAME=YES

```
DFHMCT TYPE=EMP,CLASS=PERFORM,ID=(DFHAPPL.1),                X
      PERFORM=(MOVE(0,4)),FIELD=(1,APPLNAME)          @BA63143
DFHMCT TYPE=EMP,CLASS=PERFORM,ID=(DFHAPPL.2),                X
      PERFORM=(MOVE(4,8))                             @BA63143
```

There is one user event monitoring point field with name APPLNAME added to the system management facility (SMF) record. The SMF record field contains 12 bytes. Two monitoring points, DFHAPPL.1 and DFHAPPL.2, perform the following default operation when invoked:

- **DFHAPPL.1**: Moves four characters from the address specified on the DATA1 option of the EXEC CICS MONITOR command to an offset zero in the SMF field.
- **DFHAPPL.2**: Moves eight characters from the address specified on the DATA1 option of the EXEC CICS MONITOR command to an offset four in the SMF field.

Unlike EMPs which you define explicitly with your own EMP IDs, data moved by invoking the APPLNAME EMPs is not reset by CICS after you force the writing of an SMF record by using the DELIVERY option. However, your application can set different values by invoking the APPLNAME EMPs again.

CICS Performance Analyzer implements these changes by splitting the 12-byte SMF field into two fields, a four-byte field called APPLTRAN and an eight-byte field called APPLPROG. These fields can be requested in Report Forms or the FIELDS/BY command operands. APPLTRAN and APPLPROG are new Selection Criteria fields that allow filtering of reports by Application Naming transaction ID and program.

14.2 Application Naming sample

This section provides a sample EMP, the monitoring control table (MCT), and the results of running the program.

14.2.1 Sample program

To show how you can use the DFHAPPL EMPs, we developed the program shown in Example 14-2. The basic flow of this program is:

1. Write actual transaction code and program name to SMF record in DFHAPPL provided field.
2. Write the date and time to SMF record in its own generated EMP2 field. This EMP also updates a counter.
3. Update the counter again and force the writing of the SMF record.

4. Update the counter twice.
5. Update counter again and force the writing of a second SMF record.
6. Change the values in the DFHAPPL provided fields.
7. Stop the program so that a third SMF record is written.

Example 14-2 Sample program to show DFHAPPL EMP usage

```
  WORKING-STORAGE SECTION.
  01  DFHAPPL          PIC X(8)  VALUE 'DFHAPPL'.
  01  APPLDATA-PTR     POINTER.
  01  APPLTRAN         PIC X(4).
  01  APPLPROG         PIC X(8).
  01  APPLDATA-LEN     PIC S9(8) COMP VALUE 0.
*
  01  CICS-TIME        PIC X(08) VALUE SPACES.
  01  EMP2P            PIC X(8)  VALUE 'EMP2'.
  01  PGMTIME-PTR      POINTER.
  01  PGMTIME.
    03  CURRENT-DATE PIC X(10).
    03  FILLER       PIC X(01)   VALUE SPACES.
    03  CURRENT-TIME PIC X(08).
  01  PGMTIME-LEN      PIC S9(8) COMP VALUE 19.
*
  01  ITSOTRAN         PIC X(4)  VALUE 'ITSO'.
  01  ITSOPROG         PIC X(8)  VALUE 'ITSOPROG'.
*
  PROCEDURE DIVISION.
  BEGIN.
*
* OBTAIN TRANSACTION ID FROM EIB AND USE E.C.ASSIGN
* FOR PROGRAM NAME.
*
          MOVE EIBTRNID TO APPLTRAN.
          EXEC CICS ASSIGN PROGRAM(APPLPROG)
          END-EXEC.
*
* WRITE TO DFHAPPL EMP.
*
          SET APPLDATA-PTR TO ADDRESS OF APPLTRAN.
          EXEC CICS MONITOR POINT(1) ENTRYNAME(DFHAPPL)
          DATA1(APPLDATA-PTR) DATA2(APPLDATA-LEN)
          END-EXEC.
*
          SET APPLDATA-PTR TO ADDRESS OF APPLPROG.
          EXEC CICS MONITOR POINT(2) ENTRYNAME(DFHAPPL)
          DATA1(APPLDATA-PTR) DATA2(APPLDATA-LEN)
          END-EXEC.
*
* OBTAIN DATE AND TIME
*
          EXEC CICS ASKTIME
                    ABSTIME(CICS-TIME)
          END-EXEC.
          EXEC CICS FORMATTIME
                    ABSTIME(CICS-TIME)
                    DDMMYYYY(CURRENT-DATE)
```

```
                    DATESEP
                    TIME(CURRENT-TIME)
                    TIMESEP
          END-EXEC.
*
* WRITE TO EMP2. AT THE SAME TIME WE UPDATE OUR COUNTER.
*
          SET PGMTIME-PTR TO ADDRESS OF PGMTIME.
          EXEC CICS MONITOR POINT(1) ENTRYNAME(EMP2P)
          DATA1(PGMTIME-PTR) DATA2(PGMTIME-LEN)
          END-EXEC.
*
* UPDATE COUNTER AGAIN AND WRITE SMF RECORD USING THE
* DELIVER OPTION IN THE EMP.
*
          EXEC CICS MONITOR POINT(2) ENTRYNAME(EMP2P)
          END-EXEC.
*
* UPDATE COUNTER TWICE
*
          EXEC CICS MONITOR POINT(3) ENTRYNAME(EMP2P)
          END-EXEC.
          EXEC CICS MONITOR POINT(3) ENTRYNAME(EMP2P)
          END-EXEC.
*
* UPDATE COUNTER AGAIN AND WRITE SMF RECORD USING THE
* DELIVER OPTION IN THE EMP.
*
          EXEC CICS MONITOR POINT(2) ENTRYNAME(EMP2P)
          END-EXEC.
*
* MOVE NEW VALLUES TO APPLTRAN.
*
          MOVE ITSOTRAN TO APPLTRAN.
          MOVE ITSOPROG TO APPLPROG.
*
* WRITE NEW VALUES TO SMF RECORD.
* SET APPLDATA-PTR TO ADDRESS OF APPLTRAN.
          EXEC CICS MONITOR POINT(1) ENTRYNAME(DFHAPPL)
          DATA1(APPLDATA-PTR) DATA2(APPLDATA-LEN)
          END-EXEC.
*
          SET APPLDATA-PTR TO ADDRESS OF APPLPROG.
          EXEC CICS MONITOR POINT(2) ENTRYNAME(DFHAPPL)
          DATA1(APPLDATA-PTR) DATA2(APPLDATA-LEN)
          END-EXEC.
*
     GOBACK.
```

14.2.2 Monitoring control table

Example 14-3 shows the part of the MCT that we wrote to contain the EMPs as referenced in the program.

Example 14-3 MCT part for Application Naming sample

```
I1       DFHMCT TYPE=INITIAL,                                    *
               APPLNAME=YES,                                     *
               SUFFIX=I1
*
.
.
*
         DFHMCT TYPE=EMP,                                        *
               CLASS=PERFORM,                                    *
               ID=(EMP2.1),                                      *
               COUNT=(1,COUNTER),                                *
               FIELD=(1,PGMTIME),                                *
               PERFORM=(ADDCNT(1,1),MOVE(0,19))
*
         DFHMCT TYPE=EMP,                                        *
               CLASS=PERFORM,                                    *
               ID=(EMP2.2),                                      *
               PERFORM=(ADDCNT(1,1),DELIVER)
*
         DFHMCT TYPE=EMP,                                        *
               CLASS=PERFORM,                                    *
               ID=(EMP2.3),                                      *
               PERFORM=(ADDCNT(1,1))
*
         DFHMCT TYPE=FINAL
         END
```

In this MCT, APPLNAME=YES is in the DFHMCT TYPE=INITIAL macro that results in the automatic generation of the APPLNAME field for the DFHAPPL EMP.

The fields that we added ourselves are:

- **EMP2.1**: This EMP defines two fields. The first field is a counter field with name COUNTER that is incremented by one every time we execute an EXEC CICS MONITOR POINT(1) command referencing this EMP. The second field is a character field with the name PGMTIME. Nineteen bytes of data are moved to this field while updating the counter when you run the EXEC CICS MONITOR POINT(1) command.
- **EMP2.2**: This field acts on the same counter that is defined in EMP2.1. When executing an EXEC CICS MONITOR POINT(2) command, the counter is incremented by 1 and the writing of an SMF record is requested through the DELIVERY option.
- **EMP2.3**: This field also acts on the same counter as defined in EMP2.1. Running an EXEC CICS MONITOR command on this EMP only increments the counter by one with no other action.

14.2.3 Program run results using the Performance List report

To see the results of a single program run, from CICS PA, we selected the existing SCSCPJA6 definition to update it. We only changed the title and the new SMF data set name. Next, we moved the cursor under Dictionary and entered 1 to create a new dictionary record in the specified dictionary data set. Figure 14-1 shows the Systems Definition screen with those updates.

```
---------------------------- System Definitions -----------------------------
   File  Edit  Dictionary  View  Options  Help
 ---------------------------------------------------------------------------
                                CICS System              Row 1 of 1 More: >
 Command ===>                                            Scroll ===> CSR

 CICS System definition:
  APPLID . . . . . . . . SCSCPJA6  MVS Image . .
  Description  . . . . . Testing for APPLNAME EMP
  CICS Version (VRM) . . 620
  MCT Suffix . . . . . . I1
  MCT Load Library . . . 'CICSSYSF.APPL62.LOADLIB'
  SDFHLOAD Library . . . 'CICSTS22.CICS.SDFHLOAD'
  Dictionary DSN . . . . 'CICSLS2.PJA6.DICTREC'

 / Exc              SMF Data Set Name +               UNIT +  SEQ VOLSER +
       'SMFDATA.ALLRECS.G8804V00'
 ********************************** End of list ****************************
```

Figure 14-1 Modified system entry for SCSCPJA6

Then we created a new Report Form. On the Primary Option Menu, we selected 3. The first Report Forms screen is displayed. On this screen, we entered NEW DFHAPPL to create a form with name DFHAPPL. In the pop-up screen, the APPLID was already filled in. We entered 1 to select a list form and pressed Enter. On the EDIT screen, we moved the fields APPLTRAN, APPLPROG, COUNTER, PGMTIME, and START before the EOR indicator. We also requested only those fields together with TRAN, PROG and TASKNO, and CPU. Figure 14-2 shows this Report Form definition.

```
    File  Edit  Confirm  Upgrade  Options  Help
  -------------------------------------------------------------------------------
                        EDIT LIST Report Form - DFHAPPL     Row 1 of 257 More: >
  Command ===>                                                Scroll ===> CSR

  Description  . . . List Report Form                 Version (VRM): 620

  Selection Criteria:
      Performance

     Field
  /  Name +    Type     Description
     TRAN               Transaction identifier
     PROGRAM            Program name
     TASKNO             Transaction identification number
     APPLTRAN           Application naming Tran ID
     APPLPROG           Application naming Program
     COUNTER            User field: CMF ID=EMP2     A001
     PGMTIME            User field: CMF ID=EMP2     C001
     START     TIMET    Task start time
     CPU       TIME     CPU time
     EOR                ---------------- End of Report ----------------
```

Figure 14-2 DFHAPPL Report Form

We saved this Report Form and, in the Primary Option Menu, selected option 2 to create a new Report Set with the same name DFHAPPL. On the Report Sets main screen, we entered NEW DFHAPPL. On the resulting screen, we entered S next to List in the Performance Reports

category. On the subsequent screen, we entered the APPLID, the Report Form name, and title. Then under the Selection Criteria heading, we selected the Performance option as shown in Figure 14-3.

```
  File  Systems  Options  Help
--------------------------------------------------------------------------------
                      DFHAPPL - Performance List Report
Command ===>

System Selection:                        Report Output:
 APPLID . . SCSCPJA6  +                   DDname . . . . . . . . . LIST0001
 Image  . .           +                   Print Lines per Page . .      (1-255)
 Group  . .           +

Report Format:
 Form . . . DFHAPPL   +
 Title  . . Testing of DFHAPPL EMP


Selection Criteria:
 s  Performance
```

Figure 14-3 DFHAPPL Performance List Report

As a result of selecting the Performance option, we received the Performance Select Statement screen (Figure 14-4). On this screen, we chose to include only those SMF records in which the field name TRAN is equal to APPL.

```
  File  Edit  Object Lists  Options  Help
--------------------------------------------------------------------------------
                   DFHAPPL - Performance Select Statement  Row 1 of 1 More: >
Command ===>                                                Scroll ===> CSR

        Active  --------------- Report Interval ----------------
   Inc  Start   -------- From ---------  --------- To ----------
   Exc  Stop    MM/DD/YYYY  HH:MM:SS.TH  MM/DD/YYYY  HH:MM:SS.TH

--------------------------------------------------------------------------------

   Inc  Field            --- Value or Range ---   Object
/  Exc  Name +    Type   Value/From   To          List +
   INC  TRAN             APPL
********************************* End of list *********************************
```

Figure 14-4 DFHAPPL Performance Select Statement screen

We pressed F3 to save our settings until we returned to the Report Set screen. On the Report Set screen, Global and List have *Yes* in the active column to indicate that these are the active options. On this screen, we entered the `RUN` command to run the report that generates the job to print our requested list. When the batch job finished, in the spool, we found the output shown in Figure 14-5.

```
 V1R3M0                                                CICS Performance Analyzer
                                                           Performance List
                                                 ____________________________________________
LIST0001 Printed at 15:07:28 11/01/2003    Data from 11:55:40 10/31/2003                        APPLID SCSCPJA6      Page       1
Testing of DFHAPPL EMP

 Tran Program    TaskNo Tran Program  COUNTER  PGMTIME              Start        User CPU
                                                                   Time           Time
 APPL COBAPPL      5515 APPL COBAPPL         2 31/10/2003 11:55:40  11:55:40.217    .0036
 APPL COBAPPL      5515 APPL COBAPPL         3                      11:55:40.357    .0000
 APPL COBAPPL      5515 ITSO ITSOPROG        0                      11:55:40.357    .0001
****************************** BOTTOM OF DATA ******************************************************************************
```

Figure 14-5 Performance List report

This output shows that we have three SMF records for task number 5515. During the one time execution of our test program, we first moved the actual transaction code from the EIB and the actual program name, that we acquired through an EXEC CICS ASSIGN PROGRAM command, to the DFHAPPL Tran and Program fields. Then we obtained date and time which we moved to our own defined EMP. At the same time, we set our counter to 1.

The next EXEC CICS MONITOR command was to increment our counter a second time and to force the writing of the SMF record by using the DELIVERY option. This record is printed in the first line of our report. The first Tran and Program fields are the fields as inserted by CICS. Then we see the task number followed by the Tran and Program fields from the DFHAPPL EMP. Our counter is set to 2 and the date and time as we move in the SMF record are present. The Start Time and User CPU Time are again CICS provided fields. They show the start time of the transaction and the amount of CPU time used up to when the SMF record is written.

After this first SMF record was written, all values for all user EMPs are reset. This is different for the DFHAPPL EMP which is not reset and keeps its value. To show this, we executed monitoring point 3 of our own EMP2 twice. This results in the counter becoming 2. We then executed monitoring point 2 again, which brought our counter to a value of 3 and again forced the writing of the SMF record. This is shown in the second line of the report. The counter indeed has a value of 3 and the PGMTIME field is blanked out. Notice also that the Start Time field is the time when the second SMF record was created. The CPU time used since the creation of the SMF record up to the time of writing it, is so low that no value shows up in the field.

To show that the DFHAPPL EMP fields can be modified at any time, we now moved the values ITSO and ITSOPROG to the actual SMF record. This record is written at task end and is the third and last record written for this transaction run. We see that the CICS provided values for Tran and Program are left untouched but the values of the DFHAPPL EMP contain the new values we moved to them.

To summarize, we showed you the new Application Naming feature introduced in CICS TS V2.2 and CICS TS V1.3. We wrote a sample program that shows the basic possibilities of this new feature. To show you how you can externalize this using CICS PA, we produced a performance list report. However, since you can use the newly added fields in every selection criteria, you can use these fields in other reports as well.

15

CALL and LINK performance

This chapter shows how you can perform performance measurements on an individual transaction level base. It looks at performance issues associated with use of the EXEC CICS LINK command as opposed to the CALL command in CICS COBOL programs. It shows how you can use event monitoring points to add user fields to standard CICS Monitoring Facility (CMF) performance records. Plus, this chapter shows how CICS Performance Analyzer (PA) can handle these user fields.

Note: These scenarios were used to provide situations that allow us to demonstrate the use of CICS Performance Analyzer reports. The CICS regions were not necessarily tuned for peak performance. Therefore, these scenarios and the results provided are for demonstration purposes only. They do not provide definitive results for a customer environment.

15.1 Performance testing

This example first shows how you can define your own EMPs and monitoring points to do some performance testing in your own applications. We look at the overhead of the Language Environment® (LE) 370 run-time parameter CBLPSHPOP. We also look at the performance gains obtained by specifying `RUWAPOOL=YES`.

Then, we compare the CALL and EXEC CICS LINK commands. For all these exercises, you see how CICS Performance Analyzer can be helpful to produce similar reports on different runs with different data.

15.1.1 What is CBLPSHPOP?

A CICS program can issue an EXEC CICS IGNORE or EXEC CICS HANDLE command. When this program performs an EXEC CICS LINK to another CICS program, the handle effects are not inherited by the LINKed-to program. The LINKed-to program can itself issue the EXEC CICS IGNORE or EXEC CICS HANDLE commands. Upon EXEC CICS RETURN to the first program, the LINKed-to program's HANDLE environment is ignored and the first program continues within its own HANDLE environment. This is possible because internally, CICS keeps the HANDLE environment of the first program after an EXEC CICS LINK.

This behavior becomes different with Language Environment where programs can CALL each other. With a CALL, we do not go through CICS program control so that the HANDLE environment is not saved. If a called program executes its own EXEC CICS HANDLE, it destroys the settings of the first program. Upon return, the calling program inherits the settings of the called program and eventually runs with a HANDLE environment of which it is not aware.

To avoid this, COBOL2 run-time support always executed an EXEC CICS PUSH HANDLE command to save the current effect of EXEC CICS HANDLE and EXEC CICS IGNORE commands. Upon return, an EXEC CICS POP HANDLE command was always executed to restore the caller's environment.

Language Environment run-time support introduced the CBLPSHPOP parameter to make the execution of the EXEC CICS PUSH HANDLE and the EXEC CICS POP HANDLE commands optional. For called programs that do not execute their own EXEC CICS HANDLE or EXEC CICS IGNORE commands or for called programs that issue their own EXEC CICS PUSH HANDLE and EXEC CICS POP HANDLE commands, you can se the CBLPSHPOP parameter to `OFF` to avoid the overhead of these commands.

15.1.2 CLER transaction

Language Environment provides run-time options to control CICS program's processing. There are four levels at which you can specify run-time options:

- **Installation wide**: The installation-wide options for CICS are compiled in CSECT CEEDOPT in the load module CEECCICS in data set CEE.SCEERUN. Members CEECOPT and CEEWCOPT in CEE.SCEESAMP provide a samples source and job to change installation wide definitions and to re-compile CEEDOPT.
- **Region wide**: The region-wide options, specific for individual CICS regions, are compiled in CSECT CEEROPT. This CSECT is link-edited into a load module of the same name and placed in a data set in the DFHRPL concatenation of the CICS job control language (JCL). Members CEECOPT and CEEWROPT in CEE.SCEESAMP provide a samples source and job to change region-wide definitions and to recompile CEEROPT. Options specified in a CEEROPT override CEEDOPT options.

- **Application level**: User-supplied application program level run-time options can be compiled in a CSECT with name CEEUOPT. This CSECT must be linked with the application program itself. Members CEEUOPT and CEEWUOPT in CEE.SCEESAMP provide a samples source and job to change application level definitions and to re-compile CEEUOPT so that it can be linked with the application program. Options specified in a CEEUOPT, override CEEDOPT, CEEROPT options, or both.
- **C and PL/I programs**: In C and PL/I programs, the source statements through programming language specific statements can provide run-time options.

Language Environment Authorized Program Analysis Report (APAR) PQ38838 introduced a CICS transaction called CLER that enables you to:

- Display the actually active Language Environment run-time options for this CICS region
- Write the run-time options to the CESE TD queue for printing
- Modify a subset of the run-time options

CLER is a conversational transaction. Figure 15-1 shows the initial screen.

```
CLER                                                          PJA6 SCSCPJA6

                Language Environment Region Level Runtime Options


 Type in your Choices.

 Runtime option     Choice      Possible choices.


 TRAP          ==>  ON          ON, OFF
 RPTOPTS       ==>  OFF         ON, OFF
 RPTSTG        ==>  OFF         ON, OFF
 ALL31         ==>  ON          ON, OFF
 CBLPSHPOP     ==>  ON          ON, OFF
 TERMTHDACT    ==>  TRACE       QUIET,MSG,TRACE,DUMP,UAONLY,UATRACE,UADUMP,UAIMM


 When finished, press ENTER.


       PF1=Help    3=Quit    5=Current Settings   9=Error List
```

Figure 15-1 CLER transaction initial screen

15.1.3 Monitoring control table

You can define user data fields in performance class monitoring records. User-defined fields are called event monitoring points (EMPs). EMPs allow you to add up to 16K of your own data in each performance monitoring record. The data can consist of a combination of up to 256 counters, 256 clocks, and a single character string of up to 8192 bytes. EMPs have to be specified in the monitoring control table (MCT). The MCT is fully described in the *CICS Transaction Server for z/OS CICS Resource Definition Guide*, SC34-5990.

An EMP is defined with an ID that consists of a NAME and a POINT value. The NAME qualifies the POINT value. EMPs are invoked by the execution of the following command:

```
EXEC CICS MONITOR ENTRYNAME(name) POINT(number)
```

15.1.4 RUWAPOOL SIT option

In the past, when a program ran in an LE environment, a new run unit work area (RUWA) was acquired every time a program issued an EXEC CICS LINK to another program. In CICS Transaction Server (TS) V1.3 and V2.2, the option is available to reuse RUWAs on repeated invocations of applications. This is controlled by the RUWAPOOL SIT parameter.

RUWAPPOL=YES means that CICS creates a pool of storage the first time a program invoked by LE runs in a task. This option provides an available storage pool, which reduces the need to GETMAIN and FREEMAIN RUWAs for every EXEC CICS LINK request.

RUWAPOOL=NO disables the option and provides no RUWA storage pool. Every EXEC CICS LINK to an application results in a GETMAIN for RUWA storage.

Note that the RUWAPOOL parameter affects only application programs running with the LE run-time option ALL31(ON).

15.2 Scenario description

We first compile an MCT containing the required EMPs to show the use of user clocks. We show the sample programs that contain the corresponding monitoring points to start and stop these clocks. A first run shows the CBLPSHPOP overhead when calling a subroutine without any CICS command or other COBOL instruction other than GOBACK. To make it more realistic, we do the same test but with a subroutine containing some EXEC CICS commands. With CICS PA, we produce reports and extracts to analyze the results.

In a similar way, we look at EXEC CICS LINK performance in conjunction with the RUWAPOOL SIT option. We then can also compare EXEC CICS LINK performance with CALL.

The CICS PA reports used afterwards to show the results of the different program runs are performance list reports. To do some manual calculations on the report data, we also use the CICS PA export function to have a data set in tabular form that can be downloaded to a workstation and included in a spreadsheet.

15.3 Measuring CALL performance

In this section, we analyze performance implications of the use of the CALL command.

15.3.1 Sample MCT

Example 15-1 shows the part of the MCT we used for this chapter.

Example 15-1 Sample MCT

```
I1        DFHMCT TYPE=INITIAL,                                    *
                SUFFIX=I1
*
          DFHMCT TYPE=EMP,                                        *
                CLASS=PERFORM,                                    *
                ID=(EMP1.1),                                      *
                CLOCK=(1,CPUCLOCK,ELAPSCLK),                      *
                PERFORM=(SCPUCLK(1),SCLOCK(2))
```

```
*
         DFHMCT TYPE=EMP,                                          *
               CLASS=PERFORM,                                      *
               ID=(EMP1.2),                                        *
               CLOCK=(1,CPUCLOCK,ELAPSCLK),                        *
               PERFORM=(PCPUCLK(1),PCLOCK(2))
*
         .
         .
*
         DFHMCT TYPE=FINAL
         END
```

In this example, we use the EMPs defined with ID name EMP1. EMP1.1 defines two clocks, one measuring CPU time and one measuring elapsed time. The names assigned to the clocks are CPUCLOCK and ELAPSCLK. The number 1 in the CLOCK operand is the number assigned to the first defined clock. Number+1 is assigned to subsequent clock names. The PERFORM operand defines the action to be taken to update the user defined fields. Here we use SCPUCLK(1) to start clock 1, the number that was assigned to our clock with CPUCLOCK. Similarly, we use SCLOCK(2) to start the secondly defined clock with name ELAPSCLK.

The CLOCK operand of EMP1.2 references the same clock names. The PERFORM operand, by specifying PCPUCLK and PCLOCK, asks CICS to stop the clocks when an EXEC CICS MONITOR with POINT ID of 2 is executed.

15.3.2 First run: Program description

We developed two small sample COBOL programs. Example 15-2 shows the calling program.

Example 15-2 COBCALL1: Sample COBOL calling program

```
WORKING-STORAGE SECTION.
01 EMP1P    PIC X(8) VALUE 'EMP1'.
01 LOOP-NUM PIC 99999.
PROCEDURE DIVISION.
BEGIN.
   EXEC CICS MONITOR POINT(1) ENTRYNAME(EMP1P)
   END-EXEC.
   MOVE 0 TO LOOP-NUM.
   PERFORM CALL-LOOP UNTIL LOOP-NUM = 100.
   PERFORM DONE.
CALL-LOOP.
   CALL 'COBCALL2'.
   ADD 1 TO LOOP-NUM.
DONE.
   EXEC CICS MONITOR POINT(2) ENTRYNAME(EMP1P)
   END-EXEC.
   GOBACK.
```

To avoid the overhead of execution of too many EXEC CICS MONITOR commands, we chose to start and stop the clocks only once and to place them outside of the calling loop.

For the called program, in first instance we chose to have an “empty” program, just performing a GOBACK. Example 15-3 shows this program.

Example 15-3 COBCALL2: 'Empty' COBOL called program

```
PROCEDURE DIVISION.
BEGIN.
   GOBACK.
```

Attention: You must use extreme care when using EMP clocks. As opposed to CICS clocks, a user clock continues to run when control is passed to the CICS dispatcher. This means that, if you start a CPU clock and do not stop this clock before you run a CICS command that goes through the CICS dispatcher so that a higher priority task can take control, the CPU time executed for that task is accumulated in your CPU clock.

To avoid program loading, we chose to execute a static program call. The main and only program that is known to CICS is COBCALL1. The called subprogram is COBCALL2, and it is linked into the load module COBCALL1. By changing the LOOP-NUM counter in the program, we changed the number of times we call the subprogram. We decided to have three different runs and call the subprogram 100, 5000 and 10000 times. Finally, we define transaction KALL to run the program COBCALL1. As we are using program autoinstall, we did not have to provide PROGRAM definitions.

15.3.3 Executed scenario

The system we were running on is a test system where CICS systems are running with tracing on. In the case of running with CBLPSHPOP OFF, there are no EXEC CICS commands during a COBOL CALL command. With CBLPSHPOP ON, we have these CICS commands and running with a trace on. There is additional overhead compared to the run without these commands. That is why we decided to switch all tracing off for these exercises.

We followed these steps:

1. Run CETR to switch off all tracing.
2. Compile and link the called program COBCALL2.
3. Compile and ling the calling program COBCALL1.
4. Execute the CEMT transaction to NEWCOPY program COBCALL1.
5. Execute the CLER transaction to set CBLPSHPOP to ON.
6. Execute the KALL transaction six times.
7. Execute the CLER transaction to set CBLPSHPOP to OFF.
8. Execute the KALL transaction five times.

After this, we recompiled the program to change the number of times to call the subroutine and repeated this scenario.

The first time we execute KALL six times because we expect a program load after the newcopy or because it is the first execution after CICS start.

15.3.4 Performance List report generation

After switching the SMF data sets, we used CICS Performance Analyzer in the following way to select the KALL records. The data set containing the SMF records after the switch is SMFDATA.ALLRECS.G8734V00.

In CICS Performance Analyzer, on the Primary Option Menu, we select 1 to go to the System Definitions screen (Figure 15-2).

```
 File  Edit  Filter  View  Options  Help
 ------------------------------------------------------------------------------
                              System Definitions                 Row 1 from 4
 Command ===> new                                             Scroll ===> CSR

 Select a System to edit its definition, SMF Files and Groups.
                                                                  SMF Files
 /   System   Type     Image                Description            System
     SCSCPJA6 CICS              used for creating allfields       SCSCPJA6
     SCSCLSA5 CICS              JTS1 testing                      SCSCLSA5
     SCSCLSA5 CICS              JVM testing                       SCSCLSA5
     SCSCPJA6 CICS              used for export function          SCSCPJA6
```

Figure 15-2 System Definitions screen

On this screen, we entered NEW to create a new System Definition. On the pop-up screen, we entered the new System Name which is the APPLID of the CICS on which we run our tests. In this case, this is SCSCPJA6. For System Type, we chose option 1 to select a CICS System.

We also specified a Dictionary data set name. Because we switch SMF data sets all the time, it can be that the current SMF data set does not contain a dictionary record. In our case, with EMPs defined in the MCT, we could not use the default dictionary record and so we had to define and populate the dictionary data set. The data set itself is created automatically when you specify its name on this screen. To populate it, we placed the cursor under Dictionary in the action bar and pressed Enter. Then we selected 1 as the only possible option to populate a Dictionary data set with the Dictionary record.

We filled in the SMF data set name directly on this screen. We could have added its name to the list of SMF data sets and then selected it from that list. Figure 15-3 shows the final screen after all information is filled in.

```
---------------------------- System Definitions -----------------------------
   File  Edit  Dictionary  View  Options  Help
 ---------------------------------------------------------------------------
                              CICS System              Row 1 of 1 More: >
 Command ===>                                          Scroll ===> CSR

 CICS System definition:
  APPLID . . . . . . . . SCSCPJA6  MVS Image . .
  Description  . . . . . Performance testing
  CICS Version (VRM) . . 620
  MCT Suffix . . . . . . I1
  MCT Load Library . . . 'CICSSYSF.APPL62.LOADLIB'
  SDFHLOAD Library . . . 'CICSTS22.CICS.SDFHLOAD'
  Dictionary DSN . . . . 'CICSLS2.PJA6.DICTREC'

 / Exc              SMF Data Set Name +                UNIT +  SEQ VOLSER +
       'SMFDATA.ALLRECS.G8734V00'
 ******************************** End of list ****************************
```

Figure 15-3 System Definitions final screen

We pressed F3 three times to return to the Primary Option Menu. On this screen, we selected option 3 to create a new Report Form. Figure 15-4 shows the screen where we chose to create the new CALL Report Form.

```
 File  Confirm  Samples  Options  Help
--------------------------------------------------------------------------------
                                Report Forms                 Row 1 to 7 of 7
Command ===> new call                                        Scroll ===> CSR

Report Forms Data Set  . . : CICSLS2.CICSPA.FORM

/   Name    Type             Description                Changed        ID
   APPL     LIST    List Report Form                2003/10/07 19:14 CICSLS2
   DEFAULT  LIST    List Report Form                2003/10/05 23:00 CICSLS2
   EMPX     LISTX   List Extended Report Form       2003/10/07 17:13 CICSLS2
   JTS1     LIST    List Report Form                2003/10/04 16:08 CICSLS2
   JVM      LIST    List Report Form                2003/10/04 15:32 CICSLS2
   JVM2     LIST    List Report Form                2003/10/04 15:06 CICSLS2
   PQ63143  LIST    List Report Form                2003/10/06 18:14 CICSLS2
```

Figure 15-4 Report Forms screen

On the pop-up screen, we chose to have a LIST form. In the Edit List Report Form screen, at the end of the list of all possible CMF performance fields, we find the user-defined EMP fields. With the ISPF move line command, we moved CPUCLOCK and ELAPSCLK before the EOR indicator. We moved also the start time to be included in the report. From the other fields that are before the EOR indicator, we only kept TRAN, PROGRAM, TASKNO, CPU and DISPATCH. Finally, we duplicated the DISPATCH field and on the second field we specified COUNT instead of TIME as the field type.

Figure 15-5 shows the new screen content. Only the fields in front of the EOR indicator appear in the report.

```
  File  Edit  Confirm  Upgrade  Options  Help
--------------------------------------------------------------------------------
                    EDIT LIST Report Form - CALL        Row 1 of 257 More: >
Command ===>                                                 Scroll ===> CSR

Description  . . . List Report Form                 Version (VRM): 620

Selection Criteria:
    Performance

   Field
/  Name +    Type     Description
   TRAN        Transaction identifier PROGRAM       Program name
   TASKNO             Transaction identification number
   START     TIMET    Task start time
   CPU       TIME     CPU time
   DISPATCH  TIME     Dispatch time
   DISPATCH  COUNT    Dispatch time
   CPUCLOCK  TIME     User field: CMF ID=EMP1     S001
   ELAPSCLK  TIME     User field: CMF ID=EMP1     S002
   EOR                ---------------- End of Report ----------------
   EOX                ---------------- End of Extract ---------------
   ABCODEC            Current ABEND code
```

Figure 15-5 Report Form field selection

We pressed F3 to save this form. Back on the Primary Option Menu, we chose option 2 to go to the Report Sets screen. On the command line, we entered `NEW CALL` to create a new Report Set with name CALL. Figure 15-6 shows the resulting screen.

```
  File  Systems  Confirm  Options  Help
--------------------------------------------------------------------------------
EDIT                      Report Set - CALL                        Row 1 of 34
Command ===>                                                   Scroll ===> CSR

Description . . . CICS PA Report Set

Enter "/" to select action.

             ** Reports **                            Active
     -       Options                                    No
                  Global                                No
     -       Selection Criteria                         No
                  Performance                           No
                  Exception                             No
     -       Performance Reports                        No
                  List                                  No
                  List Extended                         No
                  Summary                               No
                  Totals                                No
                  Wait Analysis                         No
                  Cross-System Work                     No
                  Transaction Group                     No
                  BTS                                   No
                  Workload Activity                     No
     -       Exception Reports                          No
```

Figure 15-6 Report Set selection screen

In the Performance Reports category, we selected **List**. On the next screen, we entered the APPLID, the form name, and selected the selection criteria Performance as shown in Figure 15-7.

```
  File  Systems  Options  Help
--------------------------------------------------------------------------------
                      CALL - Performance List Report
Command ===>

System Selection:                        Report Output:
 APPLID . . SCSCPJA6  +                   DDname . . . . . . . . . LIST0001
 Image  . .           +                   Print Lines per Page . .      (1-255)
 Group  . .           +

Report Format:
 Form . . . CALL      +
 Title  . . Performance testing


Selection Criteria:
 s  Performance
```

Figure 15-7 Performance List Report selection criteria

In the resulting screen, we chose to print only the KALL transaction. This was done by entering an I in the Inc/Exc column to indicate that this is an include option. In the Field Name column, we entered TRAN to indicate that the include selection is based on the transaction name and as the first Value, we entered the transaction code KALL. Figure 15-8 shows the resulting screen.

```
  File  Edit  Object Lists  Options  Help
--------------------------------------------------------------------------------
                    CALL - Performance Select Statement     Row 1 of 9 More: >
Command ===>                                                  Scroll ===> CSR

         Active  --------------- Report Interval ----------------
   Inc   Start   -------- From ---------  --------- To ----------
   Exc   Stop    MM/DD/YYYY  HH:MM:SS.TH  MM/DD/YYYY  HH:MM:SS.TH


--------------------------------------------------------------------------------

   Inc  Field             --- Value or Range ---   Object
/  Exc  Name +    Type    Value/From   To          List +
   INC  TRAN              KALL
```

Figure 15-8 Performance Select Statement screen

We then returned to the Report Set screen as shown in Figure 15-6. Now the Global and List options are flagged as active with a Yes in the Active column. On the command line, we entered the RUN command to run the report. This generates the batch job JCL to print the report. On the Run Report Set screen, we typed a slash ('/') in front of Edit JCL before submit to edit the JCL before submitting it. Example 15-4 shows the JCL.

Example 15-4 Generated JCL for batch report

```
//         JOB
/*JOBPARM SYSAFF=SC66
//* CICS PA V1R3 Report JCL
//CICSPA   EXEC PGM=CPAMAIN
//STEPLIB  DD DSN=CPA.SCPALINK,DISP=SHR
//SYSPRINT DD SYSOUT=*
//* SMF Input Files
//SMFIN001 DD DSN=SMFDATA.ALLRECS.G8734V00,
//            DISP=SHR
//* Command Input
//SYSIN DD *
* Report Set =CALL
* Description=CICS PA Report Set
* Reports for System=SCSCPJA6
*            Description=Performance testing
        CICSPA IN(SMFIN001),
               APPLID(SCSCPJA6),
               LINECNT(60),
               FORMAT(':','/'),
            LIST(OUTPUT(LIST0001),
               SELECT(PERFORMANCE(
               INC(TRAN(KALL)))),
               FIELDS(TRAN,
                      PROGRAM,
                      TASKNO,
```

```
                        START(TIMET),
                        CPU(TIME),
                        DISPATCH(TIME),
                        DISPATCH(COUNT),
                        CLOCKTIME(OWNER(EMP1),NUMBER(001)),
                        CLOCKTIME(OWNER(EMP1),NUMBER(002))),
                 TITLE1(
 'Performance testing                                                  '))
/*
//* Dictionary Records
//CPADICTR DD DISP=SHR,DSN=CICSLS2.PJA6.DICTREC
```

We submitted the job and received the output listing shown in Figure 15-9.

```
 V1R3M0                                                CICS Performance Analyzer
                                                           Performance List
                                          ____________________________________________
LIST0001 Printed at 20:07:12 10/28/2003    Data from 19:20:20 10/28/2003                APPLID SCSCPJA6      Page       1
Performance testing

 Tran Program    TaskNo Start        User CPU Dispatch Dispatch CPUCLOCK ELAPSCLK
                        Time           Time     Time     Count    Time     Time
 KALL COBCALL1      485 19:23:39.437    .0024    .0151        3    .0003    .0003
 KALL COBCALL1      486 19:23:40.397    .0006    .0008        1    .0003    .0003
 KALL COBCALL1      487 19:23:41.357    .0006    .0009        1    .0003    .0004
 KALL COBCALL1      488 19:23:42.319    .0006    .0009        1    .0003    .0004
 KALL COBCALL1      489 19:23:43.394    .0006    .0012        1    .0003    .0003
 KALL COBCALL1      490 19:23:44.506    .0006    .0008        1    .0003    .0003
 KALL COBCALL1      492 19:24:10.170    .0003    .0005        1    .0000    .0000
 KALL COBCALL1      493 19:24:11.061    .0003    .0043        1    .0000    .0000
 KALL COBCALL1      494 19:24:11.899    .0003    .0005        1    .0000    .0000
 KALL COBCALL1      495 19:24:12.821    .0003    .0005        1    .0000    .0000
 KALL COBCALL1      496 19:24:13.704    .0003    .0005        1    .0000    .0000
 KALL COBCALL1      499 19:25:41.526    .0156    .0215        3    .0148    .0166
 KALL COBCALL1      500 19:25:42.371    .0152    .0173        1    .0149    .0168
 KALL COBCALL1      501 19:25:43.218    .0151    .0166        1    .0148    .0162
 KALL COBCALL1      502 19:25:44.097    .0152    .0175        1    .0149    .0169
 KALL COBCALL1      503 19:25:44.987    .0152    .0167        1    .0148    .0160
 KALL COBCALL1      504 19:25:45.907    .0153    .0197        1    .0149    .0191
 KALL COBCALL1      506 19:25:56.895    .0016    .0018        1    .0014    .0014
 KALL COBCALL1      508 19:25:57.705    .0017    .0020        1    .0014    .0015
 KALL COBCALL1      509 19:25:58.549    .0017    .0020        1    .0014    .0015
 KALL COBCALL1      510 19:25:59.356    .0017    .0022        1    .0014    .0017
 KALL COBCALL1      511 19:26:00.099    .0017    .0019        1    .0014    .0015
 KALL COBCALL1      514 19:27:01.425    .0308    .0419        3    .0300    .0339
 KALL COBCALL1      515 19:27:02.270    .0299    .0321        1    .0296    .0316
 KALL COBCALL1      516 19:27:03.115    .0303    .0369        1    .0300    .0362
 KALL COBCALL1      517 19:27:03.961    .0300    .0327        1    .0297    .0322
 KALL COBCALL1      518 19:27:04.809    .0301    .0338        1    .0298    .0334
 KALL COBCALL1      519 19:27:05.653    .0300    .0338        1    .0297    .0332
 KALL COBCALL1      521 19:27:18.100    .0031    .0035        1    .0028    .0030
 KALL COBCALL1      522 19:27:19.054    .0031    .0064        1    .0028    .0059
 KALL COBCALL1      523 19:27:19.904    .0031    .0037        1    .0028    .0032
 KALL COBCALL1      524 19:27:20.749    .0031    .0035        1    .0028    .0030
 KALL COBCALL1      525 19:27:21.558    .0031    .0036        1    .0028    .0030
****************************** BOTTOM OF DATA ******************************************************************************
```

Figure 15-9 CICS PA List report: First run

We see that transactions with numbers 485, 499, and 514 have a dispatch count of 3 because they were the first transactions executed after a NEWCOPY of the program. All other runs were dispatched only once so that we are sure that CPU and elapsed wait time only apply to these particular runs.

Transactions 486 to 496 represent the program runs where the subprogram was called 100 times, 500 to 511 are for the runs where the subprogram was called 5000 times, and 515 to 525 are for the runs of 10000 calls.

As expected, the CICS measured transaction CPU time is slightly higher than the EMP CPU clock time. In case of larger applications where smaller isolated parts are measured, this difference may be higher. The same applies for the CICS measured dispatch time and the EMP measured elapsed time, except for the runs where the dispatch count is 3. Here we see a higher dispatch time because it includes the time being dispatched to load the program before the start of the program execution.

For the runs when we call the subprogram 100 times, we see CPU and elapsed times as being zero. The execution time was too short to have it in the fourth digit after the comma.

15.3.5 Data export

With the intention of performing some calculations on the CPU measurement results, we planned to export only the two CPU clock fields to a data set. To have only two columns with those two fields, we created a new Report Form called CALL2. On the Report Forms screen, we entered `NEW CALL2` and received the New Report Form pop-up screen. Here we chose to create CALL2 as a model from CALL as shown in Figure 15-10.

```
---------------------------- Report Forms -----------------------------
   File  Systems  Options  Help
 ----------------------------------------------------------------------
                            New Report Form
 Command ===>

 Specify the name of the new Report Form and its options.

 Name  . . . . . . CALL2

 APPLID  . . . . . SCSCPJA6  +  Version (VRM) . . 620
 MVS Image . . . .
                                   Field Categories

 Form Type or Model . . 4  1. List
                           2. List Extended (Sorted)
                           3. Summary
                           4. Model (specified below)

 Model  CALL
```

Figure 15-10 New Report Form screen

In the CALL2 form, we moved the fields CPU and CPUCLOCK to the top of the list and moved the EOX indicator behind them as shown in Figure 15-11.

```
  File  Edit  Confirm  Upgrade  Options  Help
--------------------------------------------------------------------------------
                      EDIT LIST Report Form - CALL2       Row 1 of 257 More: >
Command ===>                                                  Scroll ===> CSR

Description  . . . List Report Form                  Version (VRM): 620

Selection Criteria:
    Performance

   Field
/  Name +    Type     Description
   CPU       TIME     CPU time
   CPUCLOCK  TIME     User field: CMF ID=EMP1     S001
   EOX                ---------------- End of Extract ---------------
   TRAN               Transaction identifier
   PROGRAM            Program name
   TASKNO             Transaction identification number
   START     TIMET    Task start time
   DISPATCH  TIME     Dispatch time
   DISPATCH  COUNT    Dispatch time
   ELAPSCLK  TIME     User field: CMF ID=EMP1     S002
   EOR                ---------------- End of Report ----------------
   ABCODEC            Current ABEND code
```

Figure 15-11 CALL2 Report Form screen

In the CALL Report Set, this time we deactivated the list report option by entering a `D` in front of List and then selected the **Export** option in the Extracts category. On the screen shown in Figure 15-12, we entered the APPLID, `SCSCPJA6`; the Data Set Name to contain the extract, `CICSLS2.CALL.EXPORT`; specified `1` for the data set disposition; entered `CALL2` for the Extract Format Form; and finally, entered `S` to select the Performance selection criteria.

```
  File  Systems  Options  Help
--------------------------------------------------------------------------------
                                CALL - Export
Command ===>

System Selection:                        Extract Recap:
 APPLID . . SCSCPJA6  +                   DDname  . . . EXPT0001
 Image  . .           +
 Group  . .           +

Output Data Set:
 Data Set Name  . . 'CICSLS2.CALL.EXPORT'
 Disposition  . . . 1  1. OLD   2. MOD   (If cataloged)

Extract Format:                          Enter "/" to select option
 Form  . . . . CALL2     +               /  Include Field Labels
 Delimiter . . ;                            Numeric Fields in Float format

Selection Criteria:                      Summary Processing Options:
 s  Performance                           Time Interval 00:01:00  (hh:mm:ss)
```

Figure 15-12 CALL - Export screen

On the Performance Select Statement screen (Figure 15-13), we entered two selection criteria. One is in the TRAN field to only list the KALL transactions. The other one is in the DISPATCH COUNT field to only list the transactions having a dispatch count of 1. This eliminates the transaction runs where we had a program load.

```
File  Edit  Object Lists  Options  Help
 ------------------------------------------------------------------------------
                     CALL - Performance Select Statement     Row 1 of 2 More: >
 Command ===>                                                  Scroll ===> CSR

          Active  --------------- Report Interval ----------------
    Inc   Start   -------- From ---------  --------- To ----------
    Exc   Stop    MM/DD/YYYY  HH:MM:SS.TH  MM/DD/YYYY  HH:MM:SS.TH


 ------------------------------------------------------------------------------

    Inc  Field             --- Value or Range ---   Object
 /  Exc  Name +    Type    Value/From   To          List +
    INC  TRAN              KALL
    INC  DISPATCH  COUNT   1
 ********************************* End of list *********************************
```

Figure 15-13 Export selection criteria

Back on the first Report Set screen, we re-ran the report and submitted the newly generated JCL. The data set was created. The two columns that we found in the data set were used in a Lotus 1-2-3 spreadsheet. Some calculations were performed shown in Table 15-1.

This spreadsheet shows the *Average total CPU* and *Average CPUCLOCK* times calculated per group of execution runs. The *Program Execution Ratio* column shows the total CPU time for a run with CBLPSHPOP divided by the corresponding total CPU time for a run without CBLPSHPOP. The SUM CALL+PUSH+POP column is the difference between the values of Average CPUCLOCK measured in two runs: with CBLPSHPOP ON and CBLPSHPOP OFF. It gives the CPU time consumed by LE to call the subroutine including the EXEC CICS PUSH HANDLE and the EXEC CICS POP HANDLE command. The last column shows this value divided by the number of calls done to the subroutine and thus is the cost of one call of the subroutine.

Because of the few number of transaction runs, the cost of one call to a subroutine seems to be comparable. This cannot be said of the execution ratio. For the 100-run, we presume that the CPUCLOCK time is so small, even zero in this report, that little deviations can result in significant differences in the calculated ratio. For the other two runs, the ratio is high because of the empty subroutine so that the PUSH and POP commands can be considered to be pure overhead.

Table 15-1 Lotus 1-2-3 spreadsheet created from CICS PA export: First run

Calls/ CBLPSHPOP	Total CPU	CPUCLOCK	AVG Total CPU	Program execution ratio	Avg CPUCLOCK	SUM CALL+ PUSH+POP	1 CALL+PUSH +POP
100/ON	0.0006	0.0003					
	0.0006	0.0003					
	0.0006	0.0003					
	0.0006	0.0003					
	0.0006	0.0003	0.0006		0.0003		
100/OFF	0.0003	0					
	0.0003	0					
	0.0003	0					
	0.0003	0					
	0.0003	0	0.0003	2	0	0.0003	0.000003
5000/ON	0.0152	0.0149					
	0.0151	0.0148					
	0.0152	0.0149					
	0.0152	0.0148					
	0.0153	0.0149	0.0152		0.01486		
5000/OFF	0.0016	0.0014					
	0.0017	0.0014					
	0.0017	0.0014					
	0.0017	0.0014					
	0.0017	0.0014	0.00168	9.04761905	0.0014	0.01346	0.000002692
10000/ON	0.0299	0.0296					
	0.0303	0.03					
	0.03	0.0297					
	0.0301	0.0298					
	0.03	0.0297	0.03006		0.02976		
10000/OFF	0.0031	0.0028					
	0.0031	0.0028					
	0.0031	0.0028					
	0.0031	0.0028					
	0.0031	0.0028	0.0031	9.69677419	0.0028	0.02696	0.000002696

15.3.6 Second run

To obtain a more realistic result, we decided to add some other EXEC CICS commands to the subroutine. We added five EXEC CICS commands that are normally not causing a pass through the CICS dispatcher. Example 15-5 shows the subroutine that we created.

Example 15-5 Subroutine with EXEC CICS commands

```
WORKING-STORAGE SECTION.
01  EIBADDR          POINTER.
01  USERNAME          PIC X(08) VALUE SPACES.
01  CICS-TIME         PIC X(08) VALUE SPACES.
01  PGMTIME.
  03  CURRENT-DATE    PIC X(10).
  03  FILLER          PIC X(01) VALUE SPACES.
  03  CURRENT-TIME    PIC X(08).
01  AREAPTR           POINTER.
PROCEDURE DIVISION.
BEGIN.
        EXEC CICS ADDRESS EIB(EIBADDR)
        END-EXEC.
        EXEC CICS ASSIGN USERID(USERNAME)
        END-EXEC.
        EXEC CICS ASKTIME
```

```
                    ABSTIME(CICS-TIME)
          END-EXEC.
          EXEC CICS FORMATTIME
                    ABSTIME(CICS-TIME)
                    DDMMYYYY(CURRENT-DATE)
                    DATESEP
                    TIME(CURRENT-TIME)
                    TIMESEP
          END-EXEC.
          EXEC CICS GETMAIN SET(AREAPTR)
          FLENGTH(500) INITIMG(' ')
          END-EXEC.
     GOBACK.
```

We did the same exercise again. After the KALL transactions ran, we switched the SMF data sets. We updated the system definition to contain the new SMF data set name. For the rest, we could reuse the CICS PA definitions to print the new results as shown in Figure 15-14.

```
 V1R3M0                                                CICS Performance Analyzer
                                                           Performance List
                                                 ____________________________________________
LIST0001 Printed at 23:42:29 10/28/2003    Data from 23:34:34 10/28/2003                    APPLID SCSCPJA6      Page       1
Performance testing

 Tran Program    TaskNo Start        User CPU Dispatch Dispatch CPUCLOCK ELAPSCLK
                        Time           Time     Time     Count    Time     Time
 KALL COBCALL1       67 23:34:34.344    .0040    .0134        3    .0018    .0020
 KALL COBCALL1       68 23:34:35.228    .0021    .0025        1    .0018    .0020
 KALL COBCALL1       69 23:34:35.996    .0021    .0026        1    .0018    .0021
 KALL COBCALL1       70 23:34:36.780    .0021    .0027        1    .0018    .0021
 KALL COBCALL1       71 23:34:37.498    .0021    .0026        1    .0018    .0020
 KALL COBCALL1       72 23:34:38.227    .0021    .0026        1    .0018    .0020
 KALL COBCALL1       76 23:34:51.485    .0018    .0024        1    .0015    .0017
 KALL COBCALL1       77 23:34:52.216    .0018    .0021        1    .0015    .0016
 KALL COBCALL1       78 23:34:52.907    .0018    .0026        1    .0015    .0020
 KALL COBCALL1       79 23:34:53.601    .0019    .0024        1    .0015    .0018
 KALL COBCALL1       80 23:34:54.291    .0018    .0023        1    .0015    .0017
 KALL COBCALL1       92 23:36:08.551    .0903    .1158        3    .0874    .1022
 KALL COBCALL1       93 23:36:09.434    .0882    .0981        1    .0861    .0952
 KALL COBCALL1       94 23:36:10.242    .0879    .0992        1    .0859    .0968
 KALL COBCALL1       95 23:36:11.258    .0895    .1675        1    .0871    .1643
 KALL COBCALL1       96 23:36:12.099    .0876    .0976        1    .0857    .0952
 KALL COBCALL1       97 23:36:12.817    .0885    .1023        1    .0864    .0996
 KALL COBCALL1       99 23:36:22.175    .0743    .0829        1    .0720    .0801
 KALL COBCALL1      100 23:36:22.943    .0743    .1675        1    .0718    .1643
 KALL COBCALL1      101 23:36:23.788    .0745    .0856        1    .0722    .0820
 KALL COBCALL1      102 23:36:24.557    .0737    .0833        1    .0717    .0806
 KALL COBCALL1      103 23:36:25.286    .0742    .0836        1    .0719    .0809
 KALL COBCALL1      107 23:37:48.098    .1770    .2057        3    .1723    .1954
 KALL COBCALL1      108 23:37:49.102    .1761    .2022        1    .1722    .1974
 KALL COBCALL1      109 23:37:49.964    .1782    .2847        1    .1740    .2794
 KALL COBCALL1      110 23:37:50.848    .1767    .2833        1    .1722    .2779
 KALL COBCALL1      111 23:37:51.695    .1761    .1964        1    .1719    .1914
 KALL COBCALL1      112 23:37:52.541    .1761    .1974        1    .1719    .1921
 KALL COBCALL1      114 23:38:05.094    .1477    .1666        1    .1433    .1616
 KALL COBCALL1      115 23:38:05.901    .1481    .2488        1    .1438    .2436
 KALL COBCALL1      116 23:38:06.706    .1478    .1695        1    .1434    .1644
 KALL COBCALL1      117 23:38:07.476    .1477    .1756        1    .1437    .1707
 KALL COBCALL1      118 23:38:08.281    .1488    .1736        1    .1443    .1682
****************************** BOTTOM OF DATA ******************************************************************************
```

Figure 15-14 CICS PA List report: Second run

The results were again copied to an identical spreadsheet as the one we used for the first report. It is shown in Table 15-2.

Table 15-2 Lotus 1-2-3 spreadsheet created from CICS PA export: Second run

Calls/ CBLPSHPOP	Total CPU	CPUCLOCK	AVG Total CPU	Program execution ratio	Avg CPUCLOCK	SUM CALL+ PUSH+POP	1 CALL+PUSH +POP
100/ON	0.0021	0.0018					
	0.0021	0.0018					
	0.0021	0.0018					
	0.0021	0.0018					
	0.0021	0.0018	0.0021		0.0018		
100/OFF	0.0018	0.0015					
	0.0018	0.0015					
	0.0018	0.0015					
	0.0019	0.0015					
	0.0018	0.0015	0.00182	1.15384615	0.0015	0.0003	0.000003
5000/ON	0.0882	0.0861					
	0.0879	0.0859					
	0.0895	0.0871					
	0.0876	0.0857					
	0.0885	0.0864	0.08834		0.08624		
5000/OFF	0.0743	0.072					
	0.0743	0.0718					
	0.0745	0.0722					
	0.0737	0.0717					
	0.0742	0.0719	0.0742	1.19056604	0.07192	0.01432	0.000002864
10000/ON	0.1761	0.1722					
	0.1782	0.174					
	0.1767	0.1722					
	0.1761	0.1719					
	0.1761	0.1719	0.17664		0.17244		
10000/OFF	0.1477	0.1433					
	0.1481	0.1438					
	0.1478	0.1434					
	0.1477	0.1437					
	0.1488	0.1443	0.14802	1.19335225	0.1437	0.02874	0.000002874

The calculated value for the time of executing one call is in the same order as the first calculation, only slightly higher. The program execution ratio is now more consistent.

The conclusion from our tests is that it is not obvious how much savings you can obtain by setting the CBLPSHPOP parameter to OFF. The overhead of the two additional CICS commands has to be compared with the rest of the application. However, this example shows that when running modular applications that do a lot of calls to relatively small subroutines, the CPU consumption gain can be considerable by switching off CBLPSHPOP, if the application allows you to do so.

15.4 Measuring the EXEC CICS LINK command performance

In this section, we analyze the performance of the EXEC CICS LINK command.

15.4.1 Program description

For the EXEC CICS LINK performance exercise, we used the same programs as for the CALL. However, this time we replaced the CALL by an EXEC CICS LINK and the GOBACK by an EXEC CICS RETURN. Example 15-6 shows the source of the calling program.

Example 15-6 COBLINK1 - calling program

```
WORKING-STORAGE SECTION.
01 EMP1P    PIC X(8) VALUE 'EMP1'.
01 LOOP-NUM PIC 99999.
PROCEDURE DIVISION.
BEGIN.
   EXEC CICS MONITOR POINT(1) ENTRYNAME(EMP1P)
   END-EXEC.
   MOVE 0 TO LOOP-NUM.
   PERFORM CALL-LOOP UNTIL LOOP-NUM = 10000.
   PERFORM DONE.
CALL-LOOP.
   EXEC CICS LINK PROGRAM('COBLINK2')
   END-EXEC.
   ADD 1 TO LOOP-NUM.
DONE.
   EXEC CICS MONITOR POINT(2) ENTRYNAME(EMP1P)
   END-EXEC.
   EXEC CICS RETURN
   END-EXEC.
```

Example 15-7 shows the source of the called program.

Example 15-7 COBLINK2: Called program

```
PROCEDURE DIVISION.
BEGIN.
   EXEC CICS RETURN
   END-EXEC.
```

Unlike in the previous example, here we had no choice between static or dynamic options. We had two different load modules and thus the risk exists that we go through the CICS dispatcher during the execution of the EXEC CICS LINK command. However, we expected that during different transaction runs that use the same program load modules, these load modules would remain loaded in CICS storage. Again, we can checked in the SMF information whether we were dispatched multiple times. To run these application programs, we defined the transaction LINK. Again, no program definitions were required because we used the autoinstall program.

15.4.2 Executed scenario

We followed these steps:

1. Run transaction CETR to switch off all tracing.
2. Compile and link the calling program COBLINK1 with a loop count of 100.
3. Compile and link the called program COBLINK2.
4. Stop and restart CICS to run with SIT parameter `RUWAPOOL=NO`.
5. Execute the LINK transaction six times.
6. Recompile the program COBLINK1 with a loop count of 5000.
7. Execute the CEMT transaction to NEWCOPY program COBLINK1.
8. Execute the LINK transaction six times.
9. Recompile the program COBLINK1 with a loop count of 10000.
10. Execute the CEMT transaction to NEWCOPY program COBLINK1.
11. Execute the LINK transaction six times.
12. Recompile the program COBLINK1 with a loop count of 100.

13. Stop and restart CICS to run with SIT parameter `RUWAPOOL=YES`.
14. Execute the LINK transaction six times.
15. Recompile the program COBLINK1 with a loop count of 5000.
16. Execute the CEMT transaction to NEWCOPY program COBLINK1.
17. Execute the LINK transaction six times.
18. Recompile the program COBLINK1 with a loop count of 10000.
19. Execute the LINK transaction six times.

15.4.3 LINK transaction characteristics

Before concentrating on the CPU and elapsed timer values, we were interested in seeing the typical characteristics of this LINK transaction. In CICS PA, we could continue to use the existing system definition. We needed to change the SMF data set name.

For the typical characteristics, we decided to create a new Report Form. For that, we selected **Report Forms** on the Primary Options Menu. On the Report Forms screen, we entered the `NEW LINK` command to create the new form. A pop-up screen appeared on which we entered option `1` to request a list form. On the LIST Report Form screen, we moved program and storage related SMF field names before the EOR indicator to include these in the list report. Figure 15-15 shows the LINK form as we created it.

```
  File  Edit  Confirm  Upgrade  Options  Help
--------------------------------------------------------------------------------
                      EDIT LIST Report Form - LINK        Row 1 of 257 More: >
Command ===>                                                  Scroll ===> CSR

Description  . . . List Report Form                 Version (VRM): 620

Selection Criteria:
    Performance

   Field
/  Name +   Type    Description Field
   TRAN               Transaction identifier
   PROGRAM            Program name
   TASKNO             Transaction identification number
   DISPATCH  TIME     Dispatch time
   DISPATCH  COUNT    Dispatch time
   CPU       TIME     CPU time
   SUSPEND   TIME     Suspend time
   PCLINK             Program LINK requests
   PCLOADTM  TIME     Program Library wait time
   PCLOADTM  COUNT    Program Library wait time
   PCLURM             Program LINK URM requests
   CHMODECT           Change-TCB modes requests
   SC31UGET           EUDSA GETMAINs above 16MB
   SC31SGET           ECDSA/ESDSA GETMAINs above 16MB
   SC31CGET           ECDSA GETMAINs above 16MB
   EOR                ---------------- End of Report ----------------
```

Figure 15-15 LINK Report Form

We saved this form. Then we returned to the Primary Option Menu, where we selected option `2` to create a new Report Set which we called LINK. The choices of the Performance List report and the Report Set selection criteria are identical to those in Figure 15-6 on page 327 through Figure 15-8 on page 328. The difference is that this time, we selected on transaction

LINK instead of KALL. We ran the report and received the output listing shown in Figure 15-16.

```
V1R3M0                                                CICS Performance Analyzer
                                                          Performance List
                                                 ____________________________________________
LIST0001 Printed at 21:48:35 10/28/2003    Data from 21:33:33 10/28/2003                APPLID SCSCPJA6      Page       1
```

Tran	Program	TaskNo	Dispatch Time	Dispatch Count	User CPU Time	Suspend Time	PCLINK	PCLOADWt Time	PCLOADWt Count	PCLNKURM	ChngMode	SC31UGet	SC31SGet	SC31CGet
LINK	COBLINK1	77	.0880	7	.0068	.0019	101	.0336	3	2	6	104	0	0
LINK	COBLINK1	78	.0029	1	.0025	.0000	101	.0000	0	0	0	101	0	0
LINK	COBLINK1	79	.0028	1	.0025	.0000	101	.0000	0	0	0	101	0	0
LINK	COBLINK1	80	.0163	1	.0025	.0000	101	.0000	0	0	0	101	0	0
LINK	COBLINK1	81	.0032	1	.0026	.0000	101	.0000	0	0	0	101	0	0
LINK	COBLINK1	82	.0029	1	.0025	.0000	101	.0000	0	0	0	101	0	0
LINK	COBLINK1	84	.1338	3	.1087	.0000	5001	.0111	1	0	2	5001	0	0
LINK	COBLINK1	85	.2072	1	.1098	.0000	5001	.0000	0	0	0	5001	0	0
LINK	COBLINK1	86	.1251	1	.1096	.0000	5001	.0000	0	0	0	5001	0	0
LINK	COBLINK1	87	.1246	1	.1093	.0000	5001	.0000	0	0	0	5001	0	0
LINK	COBLINK1	88	.1243	1	.1090	.0000	5001	.0000	0	0	0	5001	0	0
LINK	COBLINK1	89	.1234	1	.1089	.0000	5001	.0000	0	0	0	5001	0	0
LINK	COBLINK1	91	.2481	3	.2174	.0001	10001	.0046	1	0	2	10001	0	0
LINK	COBLINK1	92	.2528	1	.2196	.0000	10001	.0000	0	0	0	10001	0	0
LINK	COBLINK1	93	.2526	1	.2182	.0000	10001	.0000	0	0	0	10001	0	0
LINK	COBLINK1	94	.2602	1	.2193	.0000	10001	.0000	0	0	0	10001	0	0
LINK	COBLINK1	95	.2544	1	.2192	.0000	10001	.0000	0	0	0	10001	0	0
LINK	COBLINK1	96	.2511	1	.2184	.0000	10001	.0000	0	0	0	10001	0	0
LINK	COBLINK1	66	.0864	7	.0073	.0074	101	.0294	3	2	6	105	0	0
LINK	COBLINK1	67	.0026	1	.0022	.0000	101	.0000	0	0	0	1	0	0
LINK	COBLINK1	68	.0026	1	.0022	.0000	101	.0000	0	0	0	1	0	0
LINK	COBLINK1	69	.0026	1	.0023	.0000	101	.0000	0	0	0	1	0	0
LINK	COBLINK1	70	.0027	1	.0022	.0000	101	.0000	0	0	0	1	0	0
LINK	COBLINK1	71	.0028	1	.0023	.0000	101	.0000	0	0	0	1	0	0
LINK	COBLINK1	84	.1179	3	.0952	.0000	5001	.0100	1	0	2	1	0	0
LINK	COBLINK1	85	.1038	1	.0938	.0000	5001	.0000	0	0	0	1	0	0
LINK	COBLINK1	86	.1097	1	.0948	.0000	5001	.0000	0	0	0	1	0	0
LINK	COBLINK1	87	.1053	1	.0946	.0000	5001	.0000	0	0	0	1	0	0
LINK	COBLINK1	88	.1882	1	.0957	.0000	5001	.0000	0	0	0	1	0	0
LINK	COBLINK1	89	.1079	1	.0951	.0000	5001	.0000	0	0	0	1	0	0
LINK	COBLINK1	91	.2221	3	.1903	.0001	10001	.0034	1	0	2	1	0	0
LINK	COBLINK1	92	.2279	1	.1902	.0000	10001	.0000	0	0	0	1	0	0
LINK	COBLINK1	93	.2158	1	.1898	.0000	10001	.0000	0	0	0	1	0	0
LINK	COBLINK1	94	.2163	1	.1901	.0000	10001	.0000	0	0	0	1	0	0
LINK	COBLINK1	95	.3302	1	.1924	.0000	10001	.0000	0	0	0	1	0	0
LINK	COBLINK1	96	.2951	1	.1899	.0000	10001	.0000	0	0	0	1	0	0

```
****************************** BOTTOM OF DATA ******************************************************************************
```

Figure 15-16 LINK transaction characteristics

The first transaction in this list has a PCLOAD wait count of 3. This transaction was the first user transaction initiated from a screen after the CICS restart. CICS required first to load the program autoinstall URM before the loads of COBLINK1 and COBLINK2. Because of the three program loads, we also had a change mode count of six, since each load requires a switch from QR mode to RO mode for the loading of the program and then back to QR. This also explains the high dispatch count: one initial dispatch and one after each change mode.

We see a PCLINK count of 101 because the initial link to program COBLINK1 is included in this link count together with the 100 EXEC CICS LINK commands to program COBLINK2. The link to URMs is not included in the total program link count but is reported in a separate field, PCLNKURM. For this first transaction, we linked twice to the autoinstall URM, once for COBLINK1 and once for COBLINK2. The first transaction has a higher GETMAIN count in the user, shared storage above the 16Mb line than the following transactions, again because of first initialization, or both.

The transactions with task number 84 and 91 in the top half of the list are the first ones we executed after we relinked COBLINK1 and performed a CEMT NEWCOPY of only COBLINK1.

Transactions with task number 77 to 96 in the top half of the list were running during the first CICS run. For these transactions, we see that the SC31UGet column corresponds to the values in the PCLINK column. It clearly shows that we were running with RUWAPOOL=NO and that a GETMAIN was performed for each link.

After we stopped and restarted CICS, we again started with a lower task number. The transaction with task number 66 here also shows the higher values for dispatch count and change mode count. Also the SC31UGet value is still high and in the order of the number of times we issued the EXEC CICS LINK command. The reason is that if you specify RUWAPOOL=YES, the first run of a transaction is the same as with RUWAPOOL=NO, but CICS keeps a history of the total storage of RUWAs requested to run the transaction. This means that when the transaction is run again, CICS issues a single GETMAIN for a RUWAPOOL for the total amount of storage required. As in our case, if the transaction follows the same code path, CICS allocates the storage from the RUWAPOOL and no further GETMAIN has to be performed. Therefore, we see that for all subsequent runs of the LINK transaction we only have one GETMAIN left.

15.4.4 LINK performance

The same way as we did for the CALL performance, we exported the CPU and CPUCLOCK values to a PDS to be used as input for a Lotus 1-2-3 spreadsheet. We could reuse the CALL2 Report Form that was built in 15.3.5, “Data export” on page 330. See Figure 15-10 on page 330 and Figure 15-11 on page 331.

We also reused the LINK Report Set that we earlier defined for this test. However, this time, on the Report Sets screen, we selected the **LINK** Report Set for updating. On the Report Set screen, we selected **Export** in the Performance Extracts category to specify the new data set name `CICSLS2.LINK.EXPORT`, the `CALL2` form, and a selection criteria to only print information about the LINK transaction runs that have a dispatch count equal to 1. This is similar to the actions shown in Figure 15-12 on page 331 and Figure 15-13 on page 332.

On the Report Set screen, we also selected **List** in the Performance Reports category and provided identical information for form and selection criteria. We saw that both List and Export options are flagged as active wit a Yes in the Active column so that both reports are handled in one report run.

We submitted the generated job. We expect an output in the JES spool and an output in the specified data set. Figure 15-17 shows the beginning of the resulting output in the spool. However, the data set will only contain the first two columns because the EOX indicator was moved behind the CPUCLOCK field as shown in Figure 15-11 on page 331.

```
 V1R3M0                                          CICS Performance Analyzer
                                                     Performance List
                                                 ____________________________________________
LIST0001 Printed at 22:09:31 10/28/2003    Data from 21:33:33 10/28/2003                APPLID SCSCPJA6      Page       1


 User CPU CPUCLOCK Tran Program    TaskNo Start        Dispatch Dispatch ELAPSCLK
   Time     Time                          Time           Time     Count    Time
    .0025    .0022 LINK COBLINK1       78 21:38:13.465    .0029        1    .0024
    .0025    .0022 LINK COBLINK1       79 21:38:14.310    .0028        1    .0023
    .0025    .0022 LINK COBLINK1       80 21:38:15.158    .0163        1    .0157
    .0026    .0023 LINK COBLINK1       81 21:38:16.003    .0032        1    .0025
    .0025    .0022 LINK COBLINK1       82 21:38:16.771    .0029        1    .0025
```

Figure 15-17 List output with form EMP2

The figures from the created data set were again transferred to a spreadsheet. Similar calculations were made as we did for the CALL performance test. The spreadsheet is shown in Table 15-3.

Table 15-3 LINK test results: First run

LINKs/ RUWAPOOL	Total CPU	CPUCLOCK	AVG Total CPU	Program execution ratio
100/NO	0.0025	0.0022		
	0.0025	0.0022		
	0.0025	0.0022		
	0.0026	0.0023		
	0.0025	0.0022	0.00252	
100/YES	0.0022	0.0019		
	0.0022	0.0019		
	0.0023	0.002		
	0.0022	0.0019		
	0.0023	0.002	0.00224	1.125
5000/NO	0.1098	0.1095		
	0.1096	0.1093		
	0.1093	0.109		
	0.109	0.1087		
	0.1089	0.1086	0.10932	
5000/YES	0.0938	0.0934		
	0.0948	0.0945		
	0.0946	0.0942		
	0.0957	0.0954		
	0.0951	0.0947	0.0948	1.15316456
10000/NO	0.2196	0.2193		
	0.2182	0.2178		
	0.2193	0.219		
	0.2192	0.2189		
	0.2184	0.2181	0.21894	
10000/YES	0.1902	0.1899		
	0.1898	0.1895		
	0.1901	0.1898		
	0.1924	0.1921		
	0.1899	0.1896	0.19048	1.14941201

This spreadsheet again shows that the program ratio, for the run where the program linked only a hundred times, is inconsistent with the two other runs. As the overhead of one GETMAIN is low compared to the rest of the code path, the calculations of the cost of one GETMAIN did not give accurate results, so we preferred not to include these calculations in this spreadsheet.

We thought it could be of more interest to show a comparison between the program execution with CALL and GOBACK and the program execution with EXEC CICS LINK and EXEC CICS RETURN. To do so, we first made a second run comparable to the second run of the first part of this chapter. As linked to program, we were using the same subroutine containing the five additional EXEC CICS commands. We only had to change the GOBACK to an EXEC CICS RETURN.

Table 15-4 shows the results of this run in a spreadsheet.

Table 15-4 LINK results: Second run

LINKs/ RUWAPOOL	Total CPU	CPUCLOCK	AVG Total CPU	Program execution ratio
100/NO	0.004	0.0037		
	0.0038	0.0035		
	0.0039	0.0036		
	0.0038	0.0035		
	0.0039	0.0036	0.00388	
100/YES	0.0038	0.0036		
	0.0039	0.0036		
	0.0039	0.0036		
	0.0037	0.0035		
	0.0037	0.0034	0.0038	1.02105263
5000/NO	0.1813	0.1788		
	0.18	0.1777		
	0.18	0.1777		
	0.1786	0.1764		
	0.1789	0.1766	0.17976	
5000/YES	0.1733	0.1712		
	0.1736	0.1712		
	0.1737	0.1716		
	0.1705	0.1684		
	0.1721	0.17	0.17264	1.04124189
10000/NO	0.3565	0.3522		
	0.3603	0.3557		
	0.3591	0.3545		
	0.3635	0.3587		
	0.3582	0.3536	0.35952	
10000/YES	0.3459	0.3414		
	0.3461	0.3417		
	0.3441	0.3396		
	0.3445	0.34		
	0.3456	0.3408	0.34524	1.04136253

Table 15-5 shows the result of comparing the runs with a COBOL CALL statement versus the runs with EXEC CICS commands.

Table 15-5 CALL versus LINK comparison

	CALL		**LINK**	
	CBLPSHPOP ON	**CBLPSHPOP OFF**	**RUWAPOOL NO**	**RUWAPOOL YES**
Empty subroutine	3,01	0.31	21.89	19.05
Five commands in subroutine	17.66	14.80	35.95	34.52

The figures in the table are the average total CPU time for one execution of the program expressed in microseconds. They are shown are based on the measurements when the subroutine is called 10000 times.

The lowest figure in the table is 0.31 for the CALL to the empty subroutine with CBLPSHPOP OFF. In this case, during the transaction run, only two EXEC CICS MONITOR commands are

executed, and no other EXEC CICS command is executed during the 10000 times the subroutine is called. With CBLPSHPOP ON, for the same transaction run, one EXEC CICS PUSH and one EXEC CICS POP are executed per CALL, that means 20000 EXEC CICS commands are added. When CALLing the subroutine with the five EXEC CICS commands, we have to add another 50000 EXEC CICS commands to the previous counts so that we come to 50002 for CBLPSHPOP OFF and 70002 for CBLPSHPOP ON. This is reflected in the different results. Note that we did not calculate the time for one EXEC CICS command because each command has a different code path.

For the LINK figures, we have twice the same number of EXEC CICS commands that are executed: 20003 when calling the empty subroutine and 70003 when calling the five commands subroutine. The difference in time is purely the effect of the difference in code path if RUWAPOOL is YES or NO.

When using the subroutine with the five EXEC CICS commands, we can compare the CALL with CBLPSHPOP ON with the LINK results as those runs execute all about 70000 EXEC CICS commands. In this case, we see that there is a remarkable difference between programs using a COBOL CALL statement and EXEC CICS LINK and RETURN commands.

15.5 Conclusion

We conclude from these test runs that the use of CALL instead of EXEC CICS LINK has significant advantage in terms of CPU consumption. If you develop new COBOL applications, consider using CALL commands rather than EXEC CICS LINK commands. In this case, develop subroutines in a way that they do not require EXEC CICS HANDLE commands or that they include their own EXEC CICS PUSH and POP commands so that LE run-time option CBLPSHPOP can be set to OFF.

If you use a lot of EXEC CICS LINK commands, consider defining RUWAPOOL=YES in the SIT if storage utilization allows to do so.

The goal of this topic was to show the ease of use of CICS PA when you want to do your own performance measurement. After you make your setup, it is easy to reuse the previously defined definitions. If by looking at a certain report, a question arises about an SMF field that is not displayed in this report, it is easy to change the Report Form to include the required field. After a new test run, it is often enough to just change the name of the data set that contains the SMF records to produce a new report.

16

Exception reporting

This chapter provides examples of CICS PA exception reports.

16.1 Exception Class records

Exception data provides information about exceptional conditions suffered by a transaction, such as queuing for a file string, waiting for storage to become available, or waiting for temporary storage. This data highlights possible problems in the CICS system. CICS writes one exception record for each exception condition that occurs.

CICS Performance Analyzer (PA) can produce two reports of exceptions: a List report and a Summary report. To obtain exception class records, you need to ensure that you are recording exception class monitoring records.

The SIT parameter MN is used to specify whether monitoring is on or off at initialization. Use the individual monitoring class parameters to control which monitoring classes are to be active. The SIT parameter MNEXC is used to specify whether exception class monitoring is activated during CICS initialization.

After the CICS region is active, you can view and alter the status of exception class monitoring using the CEMT INQUIRE/SET MONITOR command. CICS writes the exception monitoring class data to SMF data sets.

16.2 Performance List report showing EXWAIT field

For this exercise, we assumed that we were running a performance report and selected just one transaction, IT8. While running the performance reports, we used the CICS Performance Analyzer field EXWAIT to report on the number of exceptions.

To obtain the performance reports, we added the SMF data set to the CICS System Definition in the CICS Performance Analyzer Systems Definition screen. Figure 16-1 shows that we used the data set SMFDATA.ALLRECS.G8633V00 for the CICS APPLID SCSCPAA1.

```
---------------------------- System Definitions -----------------------------
   File  Edit  Dictionary  View  Options  Help
 ---------------------------------------------------------------------------
                                CICS System               Row 1 of 1 More: >
 Command ===>                                             Scroll ===> CSR

 CICS System definition:
  APPLID . . . . . . . . SCSCPAA1  MVS Image . . SC66
  Description  . . . . . CICS TS V1.3
  CICS Version (VRM) . . 530
  MCT Suffix . . . . . .
  MCT Load Library . . .
  SDFHLOAD Library . . .
  Dictionary DSN . . . .

 / Exc              SMF Data Set Name +                UNIT +  SEQ VOLSER +
       'SMFDATA.ALLRECS.G8633V00'
```

Figure 16-1 Adding the SMF data set to the CICS System Definition

To produce a performance report which includes the EXWAIT field, we created a new Report Form. From the CICS Performance Analyzer main menu, we selected option is 3 for the Report Form. We created the Report Form by specifying NEW EXCFORM. See Figure 16-2.

```
  File  Confirm  Samples  Options  Help
--------------------------------------------------------------------------------
                                Report Forms                    Row 1 to 5 of 5
Command ===> new excform                                      Scroll ===> CSR

Report Forms Data Set  . . : CICSLS5.CICSPA.FORM

/   Name    Type              Description                Changed        ID
   BADRESP  LISTX   Top 20 Worst Response Times      2003/03/08 00:00 CICSPA
   DB2PERF  LIST    List Report Form                2003/10/15 12:05 CICSLS5
   EJBPERF  LIST    List Report Form                2003/10/23 15:48 CICSLS5
   SUSPEND  LIST    List Report Form                2003/10/22 17:30 CICSLS5
```

Figure 16-2 New Report Form EXCFORM

Using the line commands, we moved the EXWAIT field into the Report Form we set up. We also copied it and made the new copy a Type of COUNT. We did this to see how many times we had an exception. See Figure 16-3.

```
 File  Edit  Confirm  Upgrade  Options  Help
--------------------------------------------------------------------------------
                      EDIT LIST Report Form - EXCFORM     Row 1 of 221 More: >
Command ===>                                                  Scroll ===> CSR

Description  . . . List Report Form                 Version (VRM): 530

Selection Criteria:
    Performance

   Field
/  Name +    Type     Description
   TRAN               Transaction identifier
   STYPE              Transaction start type
   PROGRAM            Program name
   TASKNO             Transaction identification number
   STOP      TIMET    Task stop time
   RESPONSE           Transaction response time
   DISPATCH  TIME     Dispatch time
   CPU       TIME     CPU time
   EXWAIT    TIME     Exception Conditions wait time
   EXWAIT    COUNT    Exception Conditions wait time
   SUSPEND   TIME     Suspend time
   DISPWAIT  TIME     Redispatch wait time
   FCWAIT    TIME     File I/O wait time
   FCAMCT             File access-method requests
   IRWAIT    TIME     MRO link wait time
   EOR                ---------------- End of Report ----------------
```

Figure 16-3 EXCFORM Report Form

To produce a report, we created a new Report Set. From the CICS Performance Analyzer main menu, we selected option 2 for the Report Set. We created a new report called REPIT8 (Figure 16-4).

```
  File  Systems  Confirm  Options  Help
--------------------------------------------------------------------------------
                                Report Sets                    Row 1 to 9 of 9
Command ===> new repit8                                       Scroll ===> CSR

Report Sets Data Set . . : CICSLS5.CICSPA.RSET

 /    Name              Description                 Changed         ID
     DB2REPS  CICS PA Report Set               2003/10/14 12:00 CICSLS5
     DB2REP2  CICS PA Report Set               2003/10/15 13:35 CICSLS5
     EJBREP   CICS PA Report Set               2003/10/23 12:08 CICSLS5
     EXCREP   CICS PA Report Set               2003/10/23 11:28 CICSLS5
     LOGREPS  CICS PA Report Set               2003/10/22 14:39 CICSLS5
     LOGREP2  CICS PA Report Set               2003/10/18 09:48 CICSLS5
     REPORT1  CICS PA Report Set               2003/10/23 08:49 CICSLS5
     REPORT2  CICS PA Report Set               2003/10/25 11:05 CICSLS5
     REPORT3  CICS PA Report Set               2003/10/22 18:47 CICSLS5
```

Figure 16-4 New Report Set REPIT8

On the Report Set screen, we selected List in the Performance Reports category as shown in Figure 16-5.

```
  File  Systems  Confirm  Options  Help
--------------------------------------------------------------------------------
EDIT                      Report Set - REPIT8                     Row 1 of 34
Command ===>                                                  Scroll ===> CSR

Description . . . CICS PA Report Set

Enter "/" to select action.

             ** Reports **                            Active
     -       Options                                    No
                  Global                                No
     -       Selection Criteria                         No
                  Performance                           No
                  Exception                             No
     -       Performance Reports                        No
             s    List                                  No
                  List Extended                         No
                  Summary                               No
                  Totals                                No
                  Wait Analysis                         No
                  Cross-System Work                     No
                  Transaction Group                     No
                  BTS                                   No
```

Figure 16-5 List Performance Report

We added the Report Form we created to the Report Set. We also specified a selection criteria for the transaction IT8. In Figure 16-6, you can see that we specified the Report Form, `EXCFORM`, and requested selection criteria. We also entered a title of CICS PA Report IT8 for the report.

```
  File  Systems  Options  Help
--------------------------------------------------------------------------------
                      REPIT8 - Performance List Report
Command ===>

System Selection:                        Report Output:
 APPLID . .           +                   DDname . . . . . . . . . LIST0001
 Image  . .           +                   Print Lines per Page . .      (1-255)
 Group  . .           +

Report Format:
 Form . . . EXCFORM   +
 Title  . . CICS PA Report IT8


Selection Criteria:
 s  Performance
```

Figure 16-6 Performance List Report

As shown in Figure 16-7, we specified the selection criteria we wanted. In this case, we wanted to include the transaction IT8.

```
  File  Edit  Object Lists  Options  Help
--------------------------------------------------------------------------------
                   REPIT8 - Performance Select Statement   Row 1 of 9 More: >
Command ===>                                                 Scroll ===> CSR

        Active  --------------- Report Interval ----------------
   Inc  Start   -------- From ---------  --------- To ----------
   Exc  Stop    MM/DD/YYYY  HH:MM:SS.TH  MM/DD/YYYY  HH:MM:SS.TH


--------------------------------------------------------------------------------

   Inc  Field            --- Value or Range ---   Object
/  Exc  Name +    Type   Value/From   To          List +
   INC  TRAN             IT8
```

Figure 16-7 Performance Selection

We ran the Report Set, REPIT8. Now, because we did not specify a CICS APPLID in any other place, when we came to the submit, we received the message “`System not specified`”. As shown in Figure 16-8, we specified the CICS APPLID, `SCSCPAA1`, on which we wanted to run the Report Set.

```
  File  Systems  Options  Help
--------------------------------------------------------------------------------
                            Run Report Set REPIT8         System not specified
Command ===>

Specify run Report Set options then press Enter to continue submit.

System Selection:
 CICS APPLID . . scscpaa1  +  Image . .           +  Group . .           +
 DB2 SSID  . . .       +      Image . .           +  Group . .           +
 MQ SSID . . . .       +      Image . .           +  Group . .           +
 Logger  . . . .           +  Image . .           +  Group . .           +

 /  Override System Selections specified in Report Set

                                        ----- Report Interval ------
Missing SMF Files Option:                    MM/DD/YYYY  HH:MM:SS.TH
1  1. Issue error message               From
   2. Leave DSN unresolved in JCL       To
   3. Disregard offending reports

Enter "/" to select option
/  Edit JCL before submit
```

Figure 16-8 Specifying the CICS APPLID

Figure 16-9 shows part of the report that we produced. In this report, you can see the number of exceptions in the Exc Wait Count column.

```
 V1R3M0                                                CICS Performance Analyzer
                                                           Performance List
                                                 ____________________________________________
LIST0001 Printed at 12:16:22 10/25/2003    Data from 08:33:10 10/23/2003                APPLID SCSCPAA1      Page       7
CICS PA Report IT8
```

Tran	SC	Program	TaskNo	Stop Time	Response Time	Dispatch Time	User CPU Time	Exc Wait Time	Exc Wait Count	Suspend Time	DispWait Time	FC Wait	FCAMRq	IR Wait
IT8	TP	DSWIT8VV	59793	8:33:10.248	.1145	.0059	.0030	.0000	0	.1086	.0267	.0000	18	.0000
IT8	TP	DSWIT8VV	59796	8:33:10.275	.1411	.0059	.0032	.0000	0	.1351	.0231	.0000	18	.0000
IT8	TP	DSWIT8VV	59799	8:33:10.276	.1425	.0051	.0030	.0000	0	.1374	.0284	.0000	18	.0000
IT8	TP	DSWIT8VV	59795	8:33:10.280	.1463	.0056	.0030	.0000	0	.1408	.0292	.0000	18	.0000
IT8	TP	DSWIT8VV	59774	8:33:10.286	.2764	.0105	.0031	.0880	1	.2658	.1171	.0000	18	.0000
IT8	TP	DSWIT8VV	59776	8:33:10.287	.2728	.0846	.0030	.0029	1	.1881	.0372	.0000	18	.0000
IT8	TP	DSWIT8VV	59804	8:33:10.371	.2375	.0062	.0035	.0000	0	.2312	.0033	.0000	18	.0000
IT8	TP	DSWIT8VV	59781	8:33:10.372	.2665	.0049	.0030	.0000	0	.2616	.0061	.0000	18	.0000
IT8	TP	DSWIT8VV	59755	8:33:10.373	.7382	.0050	.0030	.0994	1	.7332	.0186	.0000	18	.0000
IT8	TP	DSWIT8VV	59783	8:33:10.374	.2686	.0055	.0029	.0000	0	.2630	.0123	.0000	18	.0000
IT8	TP	DSWIT8VV	59786	8:33:10.375	.2422	.0057	.0030	.0000	0	.2365	.0170	.0000	18	.0000
IT8	TP	DSWIT8VV	59805	8:33:10.377	.2429	.0267	.0028	.0000	0	.2162	.0155	.0000	18	.0000
IT8	TP	DSWIT8VV	59805	8:33:10.377	.2429	.0267	.0028	.0000	0	.2162	.0155	.0000	18	.0000
IT8	TP	DSWIT8VV	59808	8:33:10.377	.2431	.0056	.0030	.0000	0	.2375	.0269	.0000	18	.0000
IT8	TP	DSWIT8VV	59788	8:33:10.391	.2578	.0060	.0034	.0989	1	.2518	.0126	.0000	18	.0000
IT8	TP	DSWIT8VV	59791	8:33:10.393	.2595	.0062	.0032	.0000	0	.2533	.0127	.0000	18	.0000
IT8	TP	DSWIT8VV	59794	8:33:10.393	.2598	.0051	.0031	.0000	0	.2547	.0168	.0000	18	.0000
IT8	TP	DSWIT8VV	59777	8:33:10.501	.4868	.0060	.0031	.0000	0	.4808	.0082	.0000	18	.0000
IT8	TP	DSWIT8VV	59801	8:33:10.501	.3679	.0061	.0032	.0000	0	.3618	.0184	.0000	18	.0000
IT8	TP	DSWIT8VV	59797	8:33:10.505	.3716	.0049	.0028	.0000	0	.3667	.0237	.0000	18	.0000
IT8	TP	DSWIT8VV	59756	8:33:10.513	.8786	.0051	.0029	.0000	0	.8735	.0148	.0000	18	.0000
IT8	TP	DSWIT8VV	59784	8:33:10.516	.4105	.0052	.0028	.0000	0	.4053	.0163	.0000	18	.0000
IT8	TP	DSWIT8VV	59787	8:33:10.517	.3834	.0060	.0030	.0000	0	.3774	.0139	.0000	18	.0000
IT8	TP	DSWIT8VV	59809	8:33:10.517	.3835	.0053	.0030	.0000	0	.3782	.0116	.0000	18	.0000
IT8	TP	DSWIT8VV	59806	8:33:10.645	.5110	.0050	.0031	.0000	0	.5059	.0184	.0000	18	.0000
IT8	TP	DSWIT8VV	59780	8:33:10.646	.5408	.0061	.0032	.0000	0	.5347	.0170	.0000	18	.0000
IT8	TP	DSWIT8VV	59792	8:33:10.647	.5136	.0067	.0032	.0000	0	.5069	.0140	.0000	18	.0000
IT8	TP	DSWIT8VV	59789	8:33:10.648	.5150	.0063	.0034	.0969	1	.5086	.0236	.0000	18	.0000
IT8	TP	DSWIT8VV	59800	8:33:10.662	.5287	.0050	.0029	.0000	0	.5237	.0130	.0000	18	.0000
IT8	TP	DSWIT8VV	59798	8:33:10.665	.5310	.0048	.0032	.0000	0	.5261	.0100	.0000	18	.0000
IT8	TP	DSWIT8VV	59835	8:33:10.687	.0465	.0048	.0028	.0000	0	.0417	.0075	.0000	18	.0000
IT8	TP	DSWIT8VV	59807	8:33:10.692	.5579	.0059	.0031	.0000	0	.5519	.0105	.0000	18	.0000
IT8	TP	DSWIT8VV	59833	8:33:10.692	.0517	.0062	.0034	.0000	0	.0455	.0080	.0000	18	.0000
IT8	TP	DSWIT8VV	59810	8:33:10.697	.5633	.0048	.0029	.0000	0	.5584	.0133	.0000	18	.0000

Figure 16-9 Performance List Report edited

16.3 Exception List report

To see the exceptions, we used the CICS Performance Analyzer Exception report. In Figure 16-10, we requested a new Report Set by specifying NEW EXCREP.

```
   File  Systems  Confirm  Options  Help
 ------------------------------------------------------------------------------
                                 Report Sets                   Row 1 to 7 of 7
 Command ===> new excrep                                      Scroll ===> CSR

 Report Sets Data Set . . : CICSLS5.CICSPA.RSET

  /    Name              Description                Changed        ID        DB2REPS
CICS PA Report Set              2003/10/14 12:00 CICSLS5
       DB2REP2  CICS PA Report Set              2003/10/15 13:35 CICSLS5
       LOGREPS  CICS PA Report Set              2003/10/22 14:39 CICSLS5
       LOGREP2  CICS PA Report Set              2003/10/18 09:48 CICSLS5
       REPORT1  CICS PA Report Set              2003/10/23 08:49 CICSLS5
       REPORT2  CICS PA Report Set              2003/10/23 08:58 CICSLS5
       REPORT3  CICS PA Report Set              2003/10/22 18:47 CICSLS5
```

Figure 16-10 New Report Set EXCREP

To produce an exception report, we selected List in the Exception Reports category as shown in Figure 16-11.

```
   File  Systems  Confirm  Options  Help
 ------------------------------------------------------------------------------
 EDIT                      Report Set - EXCREP                     Row 1 of 25
 Command ===>                                                 Scroll ===> CSR

 Description . . . CICS PA Report Set

 Enter "/" to select action.

             ** Reports **                          Active
      -      Options                                  No
                  Global                              No
      -      Selection Criteria                       No
                  Performance                         No
                  Exception                           No
      +      Performance Reports                      No
      -      Exception Reports                        No
             s    List                                No
                  Summary                             No
      -      Transaction Resource Usage Reports       No
                  File Usage Summary                  No
                  Temporary Storage Usage Summary     No
                  Transaction Resource Usage List     No
      -      Subsystem Reports                        No
                  DB2                                 No
                  WebSphere MQ                        No
```

Figure 16-11 Exception List Report

We pressed Enter and the Exception List Report screen is displayed. We entered a title for the report and left the other fields as the default (Figure 16-12).

```
  File  Systems  Options  Help
--------------------------------------------------------------------------------
                      EXCREP - Exception List Report
Command ===>

System Selection:                        Report Output:
 APPLID . .           +                   DDname . . . . . . . . . XLST0001
 Image  . .           +                   Print Lines per Page . .      (1-255)
 Group  . .           +

Report Format:
 Title  . . CICS PA Exception List Report


Selection Criteria:
    Exception
```

Figure 16-12 Report title

We completed the changes for the Exception List Report screen. We pressed F3 twice to return to the Report Set screen. On this screen, we entered line action RUN on the List to run the report (Figure 16-13).

```
  File  Systems  Confirm  Options  Help
--------------------------------------------------------------------------------
EDIT                        Report Set - EXCREP                     Row 1 of 25
Command ===>                                                  Scroll ===> CSR

Description . . . CICS PA Report Set

Enter "/" to select action.

            ** Reports **                              Active
     -      Options                                      Yes
                 Global                                  Yes
     -      Selection Criteria                           No
                 Performance                             No
                 Exception                               No
     +      Performance Reports                          No
     -      Exception Reports                            Yes
            RUN  List                                   Yes
                 Summary                                 No
     -      Transaction Resource Usage Reports           No
                 File Usage Summary                      No
                 Temporary Storage Usage Summary         No
                 Transaction Resource Usage List         No
     -      Subsystem Reports                            No
                 DB2                                     No
                 WebSphere MQ                            No
```

Figure 16-13 Run Exception List Report

We pressed Enter, and then CICS Performance Analyzer presented the Run Report Set screen (Figure 16-14). On this screen, we verified the CICS APPLID on whose exceptions we wanted to report.

```
  File  Systems  Options  Help
--------------------------------------------------------------------------------
                            Run Report Set EXCREP
Command ===>

Specify run Report Set options then press Enter to continue submit.

System Selection:
 CICS APPLID . . SCSCPAA1  +  Image . .          +  Group . .          +
 DB2 SSID  . . .       +      Image . .          +  Group . .          +
 MQ SSID . . . .       +      Image . .          +  Group . .          +
 Logger  . . . .           +  Image . .          +  Group . .          +

 /  Override System Selections specified in Report Set

                                        ----- Report Interval ------
Missing SMF Files Option:                    MM/DD/YYYY  HH:MM:SS.TH
1  1. Issue error message               From
   2. Leave DSN unresolved in JCL       To
   3. Disregard offending reports

Enter "/" to select option
/  Edit JCL before submit
```

Figure 16-14 Specifying CICS APPLID

Figure 16-15 shows the report that was produced. From the performance report, you can see that task number 59774 had an exception. You can also see that the exception was a string wait on file DEPSUMDB.

```
 V1R3M0                                          CICS Performance Analyzer
                                                      Exception List
                                                 ____________________________________
XLST0001 Printed at 10:37:51 10/23/2003     Data from 08:33:06 10/23/2003                APPLID SCSCPAA1      Page       1
CICS PA Exception List Report

                              Tran     Service  Report          Exp ..... Time ..... Current  Resource                 Exception
Tran Term LUName   Userid   SC Class    Class    Class     Taskno Seq Start    Elapsed Program    Type   Resource ID      Type

/FOR T27  SCSCPTA2 CICSUSER TO                              59478   1 08:33:06    .046 DSWFORVV STORAGE  EUDSA           WAIT
/FOR T26  SCSCPTA2 CICSUSER TO                              59475   1 08:33:06    .046 DSWFORVV STORAGE  EUDSA           WAIT
/FOR T116 SCSCPTA1 CICSUSER TO                              59469   1 08:33:06    .045 DSWFORVV STORAGE  EUDSA           WAIT
IT8  T13  SCSCPTA1 CICSUSER TP                              59471   1 08:33:06    .045 DSWIT8VV STORAGE  EUDSA           WAIT
/FOR T215 SCSCPTA2 CICSUSER TO                              59466   1 08:33:06    .045 DSWFORVV STORAGE  EUDSA           WAIT
/FOR T123 SCSCPTA1 CICSUSER TO                              59459   1 08:33:06    .002 DSWFORVV STORAGE  EUDSA           WAIT
/FOR T243 SCSCPTA2 CICSUSER TO                              59458   1 08:33:06    .004 DSWFORVV STORAGE  EUDSA           WAIT
/FOR T242 SCSCPTA2 CICSUSER TO                              59455   1 08:33:06    .006 DSWFORVV STORAGE  EUDSA           WAIT
/FOR T241 SCSCPTA2 CICSUSER TO                              59453   1 08:33:06    .008 DSWFORVV STORAGE  EUDSA           WAIT
/FOR T222 SCSCPTA2 CICSUSER TO                              59454   1 08:33:06    .009 DSWFORVV STORAGE  EUDSA           WAIT
/FOR T122 SCSCPTA1 CICSUSER TO                              59449   1 08:33:06    .013 DSWFORVV STORAGE  EUDSA           WAIT
/FOR T240 SCSCPTA2 CICSUSER TO                              59451   1 08:33:06    .015 DSWFORVV STORAGE  EUDSA           WAIT
IT8  T134 SCSCPTA1 CICSUSER TP                              59654   1 08:33:07    .024 DSWIT8VV STORAGE  EUDSA           WAIT
IT8  T11  SCSCPTA1 CICSUSER TP                              59776   1 08:33:10    .002 DSWIT8VV FILE     DEPSUMDB        STRING
IT8  T21  SCSCPTA2 CICSUSER TP                              59774   1 08:33:10    .088 DSWIT8VV FILE     DEPSUMDB        STRING
IT8  T17  SCSCPTA1 CICSUSER TP                              59788   1 08:33:10    .098 DSWIT8VV FILE     DEPSUMDB        STRING
IT8  T212 SCSCPTA2 CICSUSER TP                              59755   1 08:33:10    .099 DSWIT8VV FILE     DEPSUMDB        STRING
IT8  T18  SCSCPTA1 CICSUSER TP                              59789   1 08:33:10    .096 DSWIT8VV FILE     DEPSUMDB        STRING
IT8  T23  SCSCPTA2 CICSUSER TP                              60008   1 08:33:13    .019 DSWIT8VV FILE     DEPSUMDB        STRING
IT8  T11  SCSCPTA1 CICSUSER TP                              60009   1 08:33:13    .001 DSWIT8VV FILE     DEPSUMDB        STRING
IT8  T115 SCSCPTA1 CICSUSER TP                              60018   1 08:33:13    .004 DSWIT8VV FILE     DEPSUMDB        STRING
IT8  T110 SCSCPTA1 CICSUSER TP                              60017   1 08:33:13    .008 DSWIT8VV FILE     DEPSUMDB        STRING
```

Figure 16-15 Exception List Report edited

When we set up the Report Set for the exceptions, we did not specify any selection criteria. This resulted in the report in Figure 16-15, which also shows that the APPLID SCSCPAA1 suffered exceptions of Waits for EUDSA.

16.4 Exception Summary report

We ran the Exception Summary report (Figure 16-16). Here we first deactivated the Exception Report: List and then activated the Exception Report: Summary. We could have run both the List and Summary reports together in the same job, by activating both reports on the Report Set screen.

```
File  Systems  Confirm  Options  Help
 ------------------------------------------------------------------------------
 EDIT                      Report Set - EXCREP                      Row 1 of 25
 Command ===>                                                  Scroll ===> CSR

 Description . . . CICS PA Report Set

 Enter "/" to select action.

             ** Reports **                                  Active
     -       Options                                          No
                  Global                                      No
     -       Selection Criteria                               No
                  Performance                                 No
                  Exception                                   No
     +       Performance Reports                              No
     -       Exception Reports                                No
                  List                                        No
             a    Summary                                     No
     -       Transaction Resource Usage Reports               No
                  File Usage Summary                          No
                  Temporary Storage Usage Summary             No
                  Transaction Resource Usage List             No
     -       Subsystem Reports                                No
                  DB2                                         No
                  WebSphere MQ                                No
```

Figure 16-16 Activate Exception Summary Report

We then ran the Exception Summary report. Figure 16-17 shows the output.

```
 V1R3M0                                        CICS Performance Analyzer
                                                   Exception Summary
                                   ____________________________________________________
XSUM0001 Printed at 11:28:25 10/23/2003     Data from 08:33:06 10/23/2003 to 08:34:43 10/23/2003                    Page       1


Tran   Total    TS-Buffer-Wait   TS-String-Wait  Pool-Buffr-Wait  Pool-Strng-Wait  File-Strng-Wait  ..Temp Storage.  ..Main Storage.
 ID   Excepts  Average   Count  Average   Count  Average   Count  Average   Count  Average   Count  Average   Count  Average   Count

/FOR       46                                                                                                              .046      46
IT8        74                                                                                .020      69                    .035       5
       -------  ------- -------  ------- -------  ------- -------  ------- -------  ------- -------  ------- -------  ------- -------
TOTAL     120                                                                                .020      69                    .045      51
```

Figure 16-17 Exception Summary report

The Exception Summary report summarizes the exception records collected by the CICS Monitoring Facility. The records are summarized by transaction identifier. The report provides the total number of exceptions for each transaction. In the report shown in Figure 16-17, you can see that the transaction IT8 had a total of 74 exceptions. Five of them were storage waits and the rest were string waits.

In conclusion, the CICS PA Exception Reports showed the number and type of exceptions from which the CICS System was suffering.

17

Analyzing overall system performance

In this chapter, we generate reports that help use to understand the overall performance behavior of a system that is composed of a number of CICS regions running a mixed transaction workload. We do not use the detailed step-by-step approach as we do in other chapters. Here we describe which definitions we created and only show the most relevant screens.

17.1 Making a subset of CMF performance records

For this chapter, we were collecting CICS Monitoring Facility (CMF) performance records from nine different systems. Refer to Chapter 5, “System setup and scenario overview” on page 129, for a description of our system setup and CICS region connectivity.

Four of our regions are at CICS TS V1.3 level:

- SCSCPTA1 - TOR
- SCSCPTA2 - TOR
- CICSPAA1 - AOR
- CICSPAA4 - AOR

Four other regions are at CICS TS V2.2 level:

- CICSPLA1 - TOR
- CICSPLA2 - TOR
- CICSPJA6 - AOR
- CICSPJA7 - AOR

We also used a stand-alone CICS Transaction Server (TS) V1.3 region, SCSCPAA6, in which we executed some additional CICS Web-based applications.

Because multiple regions are involved, we started by creating a new system definition. We created an MVS image with the name of SC66. From the time we had the load on our CICS systems, we isolated a 15 minutes period. We started from three system management facility (SMF) data sets that we added to our newly created MVS image system definition as shown in Figure 17-1.

```
---------------------------- System Definitions -----------------------------
   File  Edit  View  Options  Help
 ---------------------------------------------------------------------------
                                MVS Image                Row 1 of 3 More: >
 Command ===>                                            Scroll ===> CSR

 MVS Image definition:
  MVS Image  . . . . . SC66
  Description  . . . . Cross system testing

 / Exc              SMF Data Set Name +                UNIT +  SEQ VOLSER +
      'SMFDATA.ALLRECS.G8812V00'                      DASD
      'SMFDATA.ALLRECS.G8813V00'                      DASD
      'SMFDATA.ALLRECS.G8814V00'                      DASD
 ********************************* End of list ****************************
```

Figure 17-1 MVS Image System Definition

We then created a new Report Set with the name CROSS. On the Report Set screen, we selected **Record Selection** in the Extracts category. Figure 17-2 shows the information that we provided.

```
  File  Systems  Options  Help
--------------------------------------------------------------------------------
                      CROSS - Record Selection Extract    Enter required field
Command ===>

System Selection:
 CICS APPLID . .           +  Image . . SC66      +  Group . .           +
 DB2 SSID  . . .       +      Image . .           +  Group . .           +
 MQ SSID . . . .       +      Image . .           +  Group . .           +

Extract Recap:
 DDname  . . . RSEL0001

Output Data Set:
 Data Set Name  . . 'CICSLS2.BIGRUN1'
 Disposition  . . . 1  1. OLD   2. MOD   (If cataloged)

Selection Criteria:
    Performance
```

Figure 17-2 Record Selection Extract information

After we saved this information, we received a summary screen with the information from Figure 17-2. We repeated this summary three times and filled in the generic CICS APPLIDs to arrive at the screen shown in Figure 17-3.

```
  File  Filter  Edit  Systems  Options  Help
--------------------------------------------------------------------------------
                     CROSS - Record Selection Extracts           Row 1 from 4
Command ===>                                                 Scroll ===> CSR

      ---- System Selection -----              Selection
/ Exc APPLID +  Image +  Group +    Recap      Criteria
      SCSCPTA*  SC66                RSEL0001     NO

      Output Data Set . .  'CICSLS2.BIGRUN1'
--------------------------------------------------------------------------------
      SCSCPAA*  SC66                RSEL0001     NO

      Output Data Set . .  'CICSLS2.BIGRUN1'
--------------------------------------------------------------------------------
      SCSCPLA*  SC66                RSEL0001     NO

      Output Data Set . .  'CICSLS2.BIGRUN1'
--------------------------------------------------------------------------------
      SCSCPJA*  SC66                RSEL0001     NO

      Output Data Set . .  'CICSLS2.BIGRUN1'
--------------------------------------------------------------------------------
```

Figure 17-3 Record Selection Extract: Selecting CICS systems

We ran the report but before we submitted the job. Then we filled in the required time limits of the period that we decided to investigate as shown in Figure 17-4.

```
  File  Systems  Options  Help
--------------------------------------------------------------------------------
                            Run Report Set CROSS
Command ===>

Specify run Report Set options then press Enter to continue submit.

System Selection:
 CICS APPLID . .          +  Image . .          +  Group . .          +
 DB2 SSID  . . .      +      Image . .          +  Group . .          +
 MQ SSID . . . .      +      Image . .          +  Group . .          +
 Logger  . . . .          +  Image . .          +  Group . .          +

 /  Override System Selections specified in Report Set

                                        ----- Report Interval ------
Missing SMF Files Option:                    MM/DD/YYYY  HH:MM:SS.TH
1  1. Issue error message               From 10/31/2003  15:40:00.00
   2. Leave DSN unresolved in JCL       To   10/31/2003  15:55:00.00
   3. Disregard offending reports

Enter "/" to select option
/  Edit JCL before submit
```

Figure 17-4 Report Set: Setting time limits

We submitted the batch job. CICS Performance Analyzer (PA) created a data set CICSLS2.BIGRUN1 that contains only the required records we are interested in for the rest of our tests. In the system definition of MVS image SC66, we replaced the names of the three SMF data sets with the single data set name `CICSLS2.BIGRUN1`.

17.2 Working with different CICS system releases

Each new release of CICS usually introduces new CMF performance class fields. Therefore, when you analyze data for CICS systems with mixed releases, some tasks include performance data that is not available for other tasks.

Each CICS system (APPLID) has a CMF Dictionary record that defines which fields are applicable to that system. CICS PA keeps a dictionary record for each CICS APPLID that has CMF performance records in the SMF file. CICS PA uses it to extract field values from the performance records when required.

When using Report Forms to tailor your List, ListX or Summary reports, CICS PA may detect that a required field value is not available, in which case, it is reported as “missing”. This typically happens when your Report Form specifies a CMF field for a new release of CICS, and your SMF file includes CMF performance data for CICS systems at an earlier release.

Note: You can specify a monitoring control table (MCT) to exclude fields from the CMF Dictionary. CICS PA treats all missing fields the same, regardless of whether they are excluded by the MCT or only applicable to a higher release of CICS.

When CICS PA reads the input data set, it uses the first dictionary record that is encountered to build the field layout that will be used for the rest of the run. When you request a field that

appears only in one of the releases, two different situations can occur depending on whether the field is present in the first dictionary record.

17.2.1 Dictionary record does not contain requested field

If the first dictionary record encountered in the input data set is from a release that does not contain a requested field, a CPA0311E message is issued and the associated field is omitted. The report that we now are going to produce is a Performance List report in which we use the CICS PA provided sample Report Form CPULST. However, to show the system name of the CMF performance record, we changed the USERID field to APPLID. Figure 17-5 shows that the first dictionary record read was for SCSCPAA4, which is a CICS TS V1.3 system. Message CPA0311E is issued twice because CMF performance fields RO CPU Time and KY8 CPU Time were requested. These correspond to DFHTASK S270 and S263, respectively.

```
 V1R3M0    15:32:06 11/07/2003                        CICS Performance Analyzer                                    Page      3
                                                            System Messages
                                                 ____________________________________________
CPA0218I  Record processing for SMF File SMFIN001 has started
CPA0220I  SMF records for System SC66 start at 11/05/2003 14:50:03:18
CPA0230I  Dictionary Record default is being used, APPLID=SCSCPAA4, Release= 5.3.0
CPA0311E  Field ID DFHTASK S270 is not defined to Dictionary -  field ignored          from module CPALSTMF+ 000556
CPA0311E  Field ID DFHTASK S263 is not defined to Dictionary -  field ignored          from module CPALSTMF+ 000556
CPA0329E  Dictionary returned error on Field ID DFHTASK S270                           from module CPALSTMF+ 0018D2
CPA0329E  Dictionary returned error on Field ID DFHTASK S263                           from module CPALSTMF+ 0018D2
CPA0230I  Dictionary Record default is being used, APPLID=SCSCPTA1, Release= 5.3.0
CPA0230I  Dictionary Record default is being used, APPLID=SCSCPTA2, Release= 5.3.0
CPA0230I  Dictionary Record default is being used, APPLID=SCSCPAA1, Release= 5.3.0
CPA0359W  Connector ID X'00CC' not mapped by Performance Dictionary record             from module CPADICMF+ 000496
          Field ID=User field  , APPLID=SCSCPAA1, Release= 5.3.0                       from module CPADICMF+ 000496
CPA0230I  Dictionary Record default is being used, APPLID=SCSCPJA7, Release= 6.2.0
CPA0359W  Connector ID X'00F0' not mapped by Performance Dictionary record             from module CPADICMF+ 000496
          Field ID=User field  , APPLID=SCSCPJA7, Release= 6.2.0                       from module CPADICMF+ 000496
CPA0230I  Dictionary Record default is being used, APPLID=SCSCPLA1, Release= 6.2.0
CPA0359W  Connector ID X'00F0' not mapped by Performance Dictionary record             from module CPADICMF+ 000496
          Field ID=User field  , APPLID=SCSCPLA1, Release= 6.2.0                       from module CPADICMF+ 000496
CPA0230I  Dictionary Record default is being used, APPLID=SCSCPLA2, Release= 6.2.0
CPA0359W  Connector ID X'00F0' not mapped by Performance Dictionary record             from module CPADICMF+ 000496
          Field ID=User field  , APPLID=SCSCPLA2, Release= 6.2.0                       from module CPADICMF+ 000496
CPA0228I  Dictionary Record from Dialog is being used, APPLID=SCSCPJA6, SID=SC66
          Record Date=11/01/2003, Time=13:25:08, Release= 6.2.0
CPA0222I  SMF records for System SC66 end at 11/05/2003 15:04:59:49
CPA0219I  End of File processing for SMF File SMFIN001  has started
CPA0229I  CICS PA has completed processing, RC=8
```

Figure 17-5 System messages from a list report showing CPA0311E

Figure 17-6 shows the beginning of the corresponding Performance List report. The header shows that fields DFHTASK S270 and S263 are missing.

```
V1R3M0                                          CICS Performance Analyzer
                                                     Performance List
                                                 ____________________________________________
LIST0001 Printed at 15:32:06 11/07/2003    Data from 14:49:57 11/05/2003                                    Page       1
list all

 Tran APPLID     TaskNo Stop          Response Dispatch User CPU   QR CPU   MS CPU  DFHTASK  DFHTASK   J8 CPU   L8 CPU   S8 CPU
                        Time            Time     Time     Time     Time     Time     S270     S263     Time     Time     Time
 SC6  SCSCPAA4    19257 14:49:57.781    .1930    .0491    .0029    .0029    .0000  Missing  Missing    .0000    .0000    .0000
 /FOR SCSCPAA4    19258 14:49:58.044    .0034    .0034    .0014    .0014    .0000  Missing  Missing    .0000    .0000    .0000
 /FOR SCSCPAA4    19259 14:49:58.100    .0034    .0034    .0012    .0012    .0000  Missing  Missing    .0000    .0000    .0000
 /FOR SCSCPAA4    19260 14:49:58.236    .0044    .0044    .0012    .0012    .0000  Missing  Missing    .0000    .0000    .0000
 SX6  SCSCPAA4    19261 14:49:58.577    .0607    .0162    .0026    .0026    .0000  Missing  Missing    .0000    .0000    .0000
```

Figure 17-6 List report showing missing header and fields

In an attempt to bypass this problem, we made two subsets of CICSLS2.BIGRUN1. One subset contains only CICS TS V1.3 records and the other only CICS TS V2.2 records. An

alternative to creating data sets that contain subsets for specific CICS regions is to create a group definition. Option 3, Maintain Group definitions, on the Systems Definitions Menu screen, allows you to do so. A system definition has to exist for an individual system that you want to add to a group. Figure 17-7 shows the definition of the group we created to contain only our CICS TS V1.3 regions.

```
---------------------------- System Definitions ----------------------------
   File  Edit  Options  Help
 ---------------------------------------------------------------------------
                          Systems in this Group           Row 1 to 5 of 5
 Command ===>                                            Scroll ===> CSR

 Group . . . . . . CICSTS13
 Description . . .

 /  System +  Type     Image                 Description
    SCSCPAA1  CICS     SC66     System added by take-up
    SCSCPAA4  CICS
    SCSCPAA6  CICS
    SCSCPTA1  CICS
    SCSCPTA2  CICS
 ********************************* End of list ***************************
```

Figure 17-7 CICSTS13 Group definition

The name of this group can then be specified in the Group field of the Record selection Extracts screen as shown in Figure 17-8. The Image name was removed to contain only the group name. One of the individual systems from the group has to contain the name of the SMF input data set so that it can be picked up from there.

```
   File  Filter  Edit  Systems  Options  Help
 ------------------------------------------------------------------------------
                     CROSS - Record Selection Extracts           Row 1 from 1
 Command ===>                                                Scroll ===> CSR

      ---- System Selection -----              Selection
 / Exc APPLID +  Image +  Group +    Recap      Criteria
                         CICSTS13   RSEL0001     NO

      Output Data Set . .  'CICSLS2.BIGRUN1.CICSTS13'
 ------------------------------------------------------------------------------
 ********************************* End of list ******************************
```

Figure 17-8 Record Selection Extracts screen

We changed the SC66 system definition so that it now has two input SMF data sets, CICSLS2.BIGRUN1.CICSTS22 and CICSLS2.BIGRUN1.CICSTS13. By defining CICSLS2.BIGRUN1.CICSTS22 before CICSLS2.BIGRUN1.CICSTS13, we made it so that the CICS TS V2.2 dictionary record would be read and used first.

17.2.2 Dictionary record contains requested field

If the first dictionary record encountered is from a release that has the requested field defined, then the field is included in the extract and the subsequent systems that do not have the field defined will have *Missing* substituted for the value. This time CICS PA issues a message CPA0329E. Figure 17-9 shows the system messages for this case.

```
 V1R3M0    15:27:58 11/07/2003                        CICS Performance Analyzer                                    Page     3
                                                            System Messages
                                                 ____________________________________________
CPA0218I  Record processing for SMF File SMFIN001 has started
CPA0220I  SMF records for System SC66 start at 11/05/2003 14:50:00:33
CPA0230I  Dictionary Record default is being used, APPLID=SCSCPJA7, Release= 6.2.0
CPA0359W  Connector ID X'00F0' not mapped by Performance Dictionary record                 from module CPADICMF+ 000496
          Field ID=User field  , APPLID=SCSCPJA7, Release= 6.2.0                           from module CPADICMF+ 000496
CPA0230I  Dictionary Record default is being used, APPLID=SCSCPLA1, Release= 6.2.0
CPA0359W  Connector ID X'00F0' not mapped by Performance Dictionary record                 from module CPADICMF+ 000496
          Field ID=User field  , APPLID=SCSCPLA1, Release= 6.2.0                           from module CPADICMF+ 000496
CPA0230I  Dictionary Record default is being used, APPLID=SCSCPLA2, Release= 6.2.0
CPA0359W  Connector ID X'00F0' not mapped by Performance Dictionary record                 from module CPADICMF+ 000496
          Field ID=User field  , APPLID=SCSCPLA2, Release= 6.2.0                           from module CPADICMF+ 000496
CPA0228I  Dictionary Record from Dialog is being used, APPLID=SCSCPJA6, SID=SC66
          Record Date=11/01/2003, Time=13:25:08, Release= 6.2.0
CPA0230I  Dictionary Record default is being used, APPLID=SCSCPAA4, Release= 5.3.0
CPA0329E  Dictionary returned error on Field ID DFHTASK S270                               from module CPALSTMF+ 0018D2
CPA0329E  Dictionary returned error on Field ID DFHTASK S263                               from module CPALSTMF+ 0018D2
CPA0230I  Dictionary Record default is being used, APPLID=SCSCPTA1, Release= 5.3.0
CPA0230I  Dictionary Record default is being used, APPLID=SCSCPTA2, Release= 5.3.0
CPA0230I  Dictionary Record default is being used, APPLID=SCSCPAA1, Release= 5.3.0
CPA0359W  Connector ID X'00CC' not mapped by Performance Dictionary record                 from module CPADICMF+ 000496
          Field ID=User field  , APPLID=SCSCPAA1, Release= 5.3.0                           from module CPADICMF+ 000496
                      . . . . . . . . . . . . . . . . . . . . . . . . . . . . . . . . . . . . . . . . . . . . . . . . . . . . . . . .
```

Figure 17-9 System Messages when reading first a CICS TS 2.2 dictionary record

Figure 17-10 shows an extract of the result of this run.

```
 V1R3M0                                                   CICS Performance Analyzer
                                                               Performance List
                                                 ____________________________________________
LIST0001 Printed at 15:27:58 11/07/2003    Data from 14:49:58 11/05/2003                                          Page       1
list all

 Tran APPLID     TaskNo Stop          Response Dispatch User CPU   QR CPU   MS CPU   RO CPU  KY8 CPU   J8 CPU   L8 CPU   S8 CPU
                        Time            Time     Time     Time     Time     Time     Time     Time     Time     Time     Time
 JCIN SCSCPJA7     6290 14:49:58.990    .1103    .1004    .0866    .0008    .0000    .0000    .0858    .0858    .0000    .0000
 JDB3 SCSCPJA7     6291 14:49:58.995    .0677    .0528    .0437    .0009    .0000    .0000    .0428    .0418    .0010    .0000
 JDB1 SCSCPJA7     6293 14:49:59.129    .1097    .0883    .0544    .0009    .0000    .0000    .0536    .0493    .0043    .0000
 CIRP SCSCPJA7     6292 14:49:59.144    .1324    .1143    .0766    .0011    .0000    .0000    .0755    .0755    .0000    .0000
.
.
 CIRR SCSCPLA2    26930 14:50:07.336    .0916    .0039    .0015    .0012    .0003    .0000    .0000    .0000    .0000    .0000
 SC6  SCSCPAA4    19257 14:49:57.781    .1930    .0491    .0029    .0029    .0000  Missing  Missing    .0000    .0000    .0000
 /FOR SCSCPAA4    19258 14:49:58.044    .0034    .0034    .0014    .0014    .0000  Missing  Missing    .0000    .0000    .0000
 /FOR SCSCPAA4    19259 14:49:58.100    .0034    .0034    .0012    .0012    .0000  Missing  Missing    .0000    .0000    .0000
 /FOR SCSCPAA4    19260 14:49:58.236    .0044    .0044    .0012    .0012    .0000  Missing  Missing    .0000    .0000    .0000
 SX6  SCSCPAA4    19261 14:49:58.577    .0607    .0162    .0026    .0026    .0000  Missing  Missing    .0000    .0000    .0000
 PS3  SCSCPAA4    19262 14:49:58.685    .0316    .0311    .0048    .0048    .0000  Missing  Missing    .0000    .0000    .0000
```

Figure 17-10 List report showing missing fields for CICS TS 1.3 records

In this last case, where we have a mix of CICS TS V1.3 and CICS TS V2.2 records, if we asked for a Summary report, we would have found *Missing* everywhere for the RO CPU Time and KY8 CPU Time. The reason that the Summary report shows averages and results is different if the average was calculated on reduced task count or on total task count. Running separate reports is more appropriate in this case.

17.3 Looking at overall system performance

We now review the reports that allow us to have a total view of one system or a group of systems. In a specific system or within a CICSplex, we can also look at groups of transactions or compare the behavior of different CICS components within different CICS regions. The intention is to use as much as possible the standard reports as offered by CICS PA.

17.3.1 Performance Totals report

The Performance Totals report summarizes the total system behavior as reflected in CMF performance records. It gives a system-wide overview of system performance and resource usage. It can be used in a daily follow-up of system behavior and, in a way, to compare regions to each other. We started with a totals report of all our systems. We continued to use our CROSS Report Set definition. On the EDIT Report Set screen, we selected **Totals** in the Performance Reports category. We verified that the System Selection Image field was set to `SC66` and did not change the selection criteria. We submitted the batch job, which resulted in seeing page 1 of the output (Figure 17-11). It shows the overall CICS system usage.

```
 V1R3M0                                                CICS Performance Analyzer
                                                           Performance Totals
                                                 ____________________________________________
TOTL0001 Printed at 17:59:12 11/07/2003    Data from 14:18:57 11/05/2003 to 15:04:59 11/05/2003                    Page       1



                                        Dispatched Time           CPU Time
                                      DD HH:MM:SS    Secs   DD HH:MM:SS    Secs

Total Elapsed Run Time                  00:46:02    2762


From Selected Performance Records

QR Dispatch/CPU Time                    00:03:39     219      00:01:01      61
MS Dispatch/CPU Time                    00:00:07       7      00:00:04       4
                                        --------   -----      --------  ------
 TOTAL (QR + MS)                        00:03:46     226      00:01:06      66

L8 CPU Time                                                    00:00:21      21
J8 CPU Time                                                    00:15:28     928
S8 CPU Time                                                    00:00:00       0
                                        --------   -----      --------  ------
 TOTAL (L8 + J8 + S8)                   00:31:55    1915      00:15:49     949

                                        --------   -----      --------  ------
 Total CICS TCB Time                    00:03:46    2141      00:16:55    1015



Total Performance Records (Type C)                     0
Total Performance Records (Type D)                     4
Total Performance Records (Type F)                     0
Total Performance Records (Type S)                     0
Total Performance Records (Type T)                 54865
                                                --------                                                   --------
Total Performance Records (Selected)                54869          Total Performance Records                  54869
```

Figure 17-11 Default Performance Totals report: Page 1

The Total Elapsed Run Time is the time calculated by subtracting the start time from the first encountered SMF record from the stop time of the last SMF record. As we isolated a time period of 15 minutes, the 46 minutes that we see here seem to be rather a high value.

On the second page of the report, we receive a more detailed view of the CPU and dispatch statistics. Figure 17-12 shows the beginning of page 2.

```
 V1R3M0                                          CICS Performance Analyzer
                                                     Performance Totals
                                   ____________________________________________
TOTL0001 Printed at 17:59:12 11/07/2003    Data from 14:18:57 11/05/2003 to 15:04:59 11/05/2003                    Page       2


                                                 ...... C  O  U  N  T  S ......   ........... T  I  M  E ...........
From Selected Performance Records                   Total   Avg/Task   Max/Task       Total    Avg/Task     Max/Task


Dispatch Time                                      795454       14.5       8239        2141        .039       10.650
CPU Time                                                                              1015        .018        3.292
RLS CPU (SRB) Time                                                                      40        .001         .007
Suspend Time                                       795451       14.5       8238       10537        .192     1887.441
Dispatch Wait Time                                 740585       13.5       8238         459        .008       12.807
Dispatch Wait Time (QR Mode)                       342477        6.2         26         184        .003         .684
Response (-TCWait for Type C)                                                            0        .000         .000
Response (All Selected Tasks)                                                        12678        .231     1887.479
QR Dispatch Time                                   397343        7.2         27         219        .004         .641
MS Dispatch Time                                   110220        2.0       8239           7        .000        1.010
RO Dispatch Time                                        1         .0          1           0        .000         .013
QR CPU Time                                                                             61        .001         .007
MS CPU Time                                                                              4        .000         .738
RO CPU TIME                                                                              0        .000         .001
L8 CPU Time                                                                             21        .000         .007
J8 CPU Time                                                                            928        .017        3.288
S8 CPU Time                                                                              0        .000         .000
```

Figure 17-12 Default Performance Totals report: Page 2

In this report, we see a maximum suspend and response time of 1887 seconds. This is a typical value for the CSOL transaction. CSOL is the TCP/IP listener transaction and is an internal CICS transaction. If you specify TCP=YES in the SIT, this transaction is started at CICS initialization. About every 30 minutes, a CMF performance record is written for this transaction. In this example, where we are interested in only application records, we prefer to exclude these records from the report. In other cases, when you want to consider the total system run, they should not be excluded. That is the reason why these internal transactions are not excluded by default. We suggest a list of long running CICS internal transactions that you can consider excluding from your reports:

- CFQR - RLS quiesce
- CFQS - RLS quiesce
- CSHQ - Scheduler services
- CSNC - IRC connection manager
- CSNE - VTAM node abnormal
- CSOL - TCP/IP listener
- CSSY - CICS internal task
- CSTP - CICS internal task
- CSZI - FEPI

If your CICS system is managed by CICSPlex System Manager (SM), you should also consider excluding:

- COIE - CICSPlex SM hearbeat task
- COI0 - CICSPlex SM CMAS communication task
- CONL - CICSPlex SM MAS initialization and control transaction
- CONM - CICSPlex SM monitoring task
- COHT - CICSPlex SM completed task history recorder

Two more transactions to be considered for exclusion are:

- CSKL - TCP/IP default Sockets listener
- CKTI - MQSeries default listener task initiator

We made an Object List, CICSEXCL, containing all the transactions that were mentioned (Figure 17-13). Figure 17-12 shows the content of the Object List.

```
  File  Edit  Confirm  Options  Help
--------------------------------------------------------------------------------
                        EDIT Object List - CICSEXCL          Row 1 to 16 of 16
Command ===>                                                  Scroll ===> CSR

Description  . . . . CICS/CPSM trans to be excluded

Specify the Object List values:

/   1st Value   2nd Value   Sublist
    CFQR
    CFQS
    CSHQ
    CSNC
    CSNE
    CSOL
    CSSY
    CSTP
    CSZI
    COIE
    COIO
    CONL
    CONM
    COHT
    CSKL
    CKTI
```

Figure 17-13 Object list to exclude CICS internal transactions

We specified the name of this Object list in the performance criteria of our totals report as shown in Figure 17-14.

```
  File  Edit  Object Lists  Options  Help
--------------------------------------------------------------------------------
                   CROSS - Performance Select Statement    Row 1 of 1 More: >
Command ===>                                                 Scroll ===> CSR

         Active  --------------- Report Interval ----------------
   Inc   Start   -------- From ---------  --------- To ----------
   Exc   Stop    MM/DD/YYYY  HH:MM:SS.TH  MM/DD/YYYY  HH:MM:SS.TH


--------------------------------------------------------------------------------

   Inc  Field             --- Value or Range ---   Object
/  Exc  Name +    Type    Value/From   To          List +
   EXC  TRAN                                       CICSEXCL
********************************* End of list *********************************
```

Figure 17-14 Exclusion object list specification

After we saved this update, we submitted the batch job again. Figure 17-15 shows page 1 of the report.

```
 V1R3M0                                                CICS Performance Analyzer
                                                           Performance Totals
                                                 ____________________________________________
TOTL0001 Printed at 17:59:58 11/07/2003    Data from 14:49:53 11/05/2003 to 15:04:59 11/05/2003                    Page       1



                                        Dispatched Time           CPU Time
                                      DD HH:MM:SS    Secs   DD HH:MM:SS    Secs

Total Elapsed Run Time                  00:15:06     906


From Selected Performance Records

QR Dispatch/CPU Time                    00:03:39     219      00:01:01      61
MS Dispatch/CPU Time                    00:00:05       5      00:00:03       3
                                        --------   -----      --------  ------
 TOTAL (QR + MS)                        00:03:44     224      00:01:04      64

L8 CPU Time                                                   00:00:21      21
J8 CPU Time                                                   00:15:28     928
S8 CPU Time                                                   00:00:00       0
                                        --------   -----      --------  ------
 TOTAL (L8 + J8 + S8)                   00:31:55    1915      00:15:49     949

                                        --------   -----      --------  ------
 Total CICS TCB Time                    00:03:44    2139      00:16:54    1014
```

Figure 17-15 Performance Totals report with CICSEXCL: Page 1

We see that the Total Elapsed Run Time now reflects the time period of our test. The CPU values did not change that much because CSOL is not using the CPU on QR or MS that much.

Figure 17-16 shows page 2 of the report after excluding the internal CICS transactions.

```
 V1R3M0                                                CICS Performance Analyzer
                                                           Performance Totals
                                                 ____________________________________________
TOTL0001 Printed at 17:59:58 11/07/2003    Data from 14:49:53 11/05/2003 to 15:04:59 11/05/2003                    Page       2


                                              ...... C  O  U  N  T  S ......   ........... T  I  M  E ...........
From Selected Performance Records                Total   Avg/Task   Max/Task       Total    Avg/Task     Max/Task


Dispatch Time                                   781034       14.2         52        2139        .039       10.650
CPU Time                                                                           1014        .018        3.292
RLS CPU (SRB) Time                                                                   40        .001         .007
Suspend Time                                    781034       14.2         52        2989        .054       10.654
Dispatch Wait Time                              726169       13.2         51         434        .008         .684
Dispatch Wait Time (QR Mode)                    342472        6.2         26         184        .003         .684
Response (-TCWait for Type C)                                                         0        .000         .000
Response (All Selected Tasks)                                                      5128        .093       10.678
QR Dispatch Time                                397337        7.2         27         219        .004         .641
MS Dispatch Time                                 95806        1.7         13           5        .000         .062
RO Dispatch Time                                     0         .0          0           0        .000         .000
QR CPU Time                                                                           61        .001         .007
MS CPU Time                                                                            3        .000         .001
RO CPU TIME                                                                            0        .000         .000
L8 CPU Time                                                                           21        .000         .007
J8 CPU Time                                                                          928        .017        3.288
S8 CPU Time                                                                            0        .000         .000
```

Figure 17-16 Performance Totals report with CICSEXCL: Page 2

From the total suspend time, we can calculate that in the first report four CSOL transactions were added. Comparing the other values, we see some significant changes in the suspend

time and dispatch wait time. However, these figures represent more the figures that we expected for our application tests.

Figure 17-17 shows part of what follows in the Totals report starting from page 3. It shows the resource utilizations statistics. Each data field from the CMF performance record is summarized in Total, Avg/Task and Max/Task. For clock fields, the count and time components are broken down. For the other fields where there is no time component, only the count values are reported.

```
V1R3M0                                          CICS Performance Analyzer
                                                     Performance Totals
                                   ____________________________________________
TOTL0001 Printed at 17:59:58 11/07/2003    Data from 14:49:53 11/05/2003 to 15:04:59 11/05/2003                    Page       3


                                                 ...... C  O  U  N  T  S ......   ........... T  I  M  E ...........
From Selected Performance Records                   Total   Avg/Task   Max/Task       Total    Avg/Task     Max/Task

FCWAIT   File I/O wait time                            0         .0          0           0        .000         .000
RLSWAIT  RLS File I/O wait time                    37566         .7         13         389        .007         .695
TSWAIT   VSAM TS I/O wait time                         0         .0          0           0        .000         .000
TSSHWAIT Asynchronous Shared TS wait time              0         .0          0           0        .000         .000
JCWAIT   Journal I/O wait time                      7276         .1         18          62        .001        1.088
TDWAIT   VSAM transient data I/O wait time             0         .0          0           0        .000         .000
IRWAIT   MRO link wait time                        17540         .3          5         317        .006        1.278
CFDTWAIT CF Data Table access requests wait time       0         .0          0           0        .000         .000
CFDTSYNC CF Data Table syncpoint wait time             0         .0          0           0        .000         .000
RUNTRWAI BTS run Process/Activity wait time            0         .0          0           0        .000         .000
SYNCDLY  SYNCPOINT parent request wait time            0         .0          0           0        .000         .000
RMITIME  Resource Manager Interface (RMI) elapsed time 63796     1.2         18          38        .001         .205
RMISUSP  Resource Manager Interface (RMI) suspend time 0         .0          0           0        .000         .000
JVMITIME JVM initialize elapsed time               47379         .9          3           0        .000         .002
JVMTIME  JVM elapsed time                         126654        2.3         10        2368        .043       10.674
.
.
PCLOADTM Program Library wait time                     0         .0          0           0        .000         .000
SYNCTIME SYNCPOINT processing time                 70749        1.3          2         121        .002         .558
OTSINDWT OTS Indoubt Wait time                         0         .0          0           0        .000         .000
EXWAIT   Exception Conditions wait time                0         .0          0           0        .000         .000
TCMSGIN1 Messages received count                   11067         .2          1
TCCHRIN1 Terminal characters received count       378040        6.9        245
TCMSGOU1 Messages sent count                       11067         .2          1
TCCHROU1 Terminal characters sent count           2934543       53.5       1561
TCMSGIN2 Messages received from LU6.1                  0         .0          0
TCCHRIN2 LU6.1 characters received count               0         .0          0
TCMSGOU2 Messages sent to LU6.1                        0         .0          0
TCCHROU2 LU6.1 characters sent count                   0         .0          0
TCALLOC  TCTTE ALLOCATE requests                   27705         .5          2
TCM62IN2 LU6.2 messages received count                 0         .0          0
TCC62IN2 LU6.2 characters received count               0         .0          0
TCM62OU2 LU6.2 messages sent count                     0         .0          0
TCC62OU2 LU6.2 characters sent count                   0         .0          0
FCADD    File ADD requests                         20087         .4          9
FCBROWSE File Browse requests                       2741         .0          5
FCDELETE File DELETE requests                        793         .0          1
FCGET    File GET requests                         92865        1.7         34
FCPUT    File PUT requests                          4482         .1          9
FCTOTAL  File Control requests                    122208        2.2         34
.
.
```

Figure 17-17 Performance Totals report with CICSEXCL: Page 3

17.3.2 Performance Summary report

Summary reports where clock and count fields are summarized statistically can also be produced with Performance Summary reports. Any field from a CMF performance record can be included in the Performance Summary report so that this allows you to tailor these reports to your more specific reporting requirements. Summary reports allow you also to look at specific transaction or a set of transactions.

Example 17-1 shows the list of sample Summary Report Forms that are available in your Report Forms data set. You can use these as a starting point for further tailoring. To have the Report form effectively available, you must select it from the pop-up screen that you see after you select Samples in the option bar in the Report Forms screen.

Example 17-1 CICS PA provided Sample Summary Report Forms

```
ABNDSUM    Transaction Abend Summary
BTSRQSUM   CICS BTS Request Activity
COMMWSUM   Transaction Comms Wait Analysis
CPUSEXTR   CPU Analysis and Extract
CPUSUM     Transaction CPU Analysis
DHSUM      CICS Document Handler Analysis
ENQSUM     CICS ENQueue/Lock Delay Analysis
FCSUM      File Request Activity
FCWTSUM    File Wait Analysis
FDSPSUM    First Dispatch Delay Analysis
FEPISUM    FEPI Request Activity
ICSUM      Interval Control Activity
IMSDBSUM   Transaction DBCTL Usage Analysis
IMSRQSUM   Transaction DBCTL Req Analysis
IMSSUM     IMS DBCTL PSB Usage Analysis
JCSUM      Journaling/Logging Activity
JVMSUM     Java Virtual Machine Analysis
PCSUM      Program Request Activity
PSTORSUM   Program Storage Analysis
RMIDBSUM   CICS RMI Analysis - DB2 Overview
RMIMSSUM   CICS RMI Analysis - IMS Overview
RMIOVSUM   CICS RMI Analysis - Overview
RMISUM1    CICS RMI Analysis - Summary (1)
RMISUM2    CICS RMI Analysis - Summary (2)
RTETRSUM   Transaction Routing Analysis (2)
SOAPSUM    SOAP for CICS Usage - Summary
SSTORSUM   Shared Storage Analysis
TCLDLSUM   Tclass Delays by Tranclass Name
TCPIPSUM   Transactions by TCP/IP Service
TCPSUM     CICS Support for TCP/IP Analysis
TCSUM2     Terminal Control Activity (2)
TDSUM      Transient Data Activity
TRAPLSUM   Transactions by Application Tran
TRARTSUM   Transaction Routing Analysis (3)
TRATDSUM   Transactions by Applid and TOD
TRRTESUM   Transaction Routing Analysis (1)
TRTCLSUM   Transactions by Tranclass Name
TRTESUM    Transaction Usage by Terminal ID
TRTODSUM   Transactions by Time-of-Day
TRTRASUM   Transaction Routing Analysis (4)
TSSUM      Temporary Storage Activity
TSWTSUM    Temporary Storage Wait Analysis
USTORSUM   User (Task) Storage Analysis
WEBSUM     CICS Web Support Analysis
```

As an example, we start to show a CPU Summary report. To avoid “missing” data, we run the report on the CICSTS22 subset of our CMF performance records. Figure 17-18 shows the contents of the CPUSUM report form.

```
  File  Edit  Confirm  Upgrade  Options  Help
--------------------------------------------------------------------------------
                    EDIT SUMMARY Report Form - CPUSUM      Row 1 of 16 More: >
Command ===>                                                  Scroll ===> CSR

Description  . . . Transaction CPU Analysis          Version (VRM): 620

Selection Criteria:
    Performance

   Field
/  Name +    S Type    Fn   Description
   TRAN      A              Transaction identifier
   TASKCNT                  Total Task count
   RESPONSE            AVE  Transaction response time
   RESPONSE            MAX  Transaction response time
   DISPATCH    TIME    AVE  Dispatch time
   CPU         TIME    AVE  CPU time
   SUSPEND     TIME    AVE  Suspend time
   QRCPU       TIME    AVE  CICS QR TCB CPU time
   MSCPU       TIME    AVE  CICS TCBs CPU time
   ROCPU       TIME    AVE  CICS RO TCB CPU time
   KY8CPU      TIME    AVE  CICS Key 8 TCB CPU time
   J8CPU       TIME    AVE  CICS J8 TCB CPU time
   L8CPU       TIME    AVE  CICS L8 TCB dispatch time
   S8CPU       TIME    AVE  CICS S8 TCB CPU time
   EOR                      ---------------- End of Report ----------------
   EOX                      ---------------- End of Extract ---------------
```

Figure 17-18 CPUSUM sample Report Form

The form shows that we selected TRAN and sorted the report in ascending order. Figure 17-19 shows the resulting output.

```
 V1R3MO                                                CICS Performance Analyzer
                                                          Performance Summary
                                                 ____________________________________________
SUMM0001 Printed at 14:44:49 11/08/2003     Data from 14:19:50 11/05/2003 to 15:04:59 11/05/2003                    Page       1
Transaction CICS TCB CPU Analysis - Summary
```

Tran	#Tasks	Avg Response Time	Max Response Time	Avg Dispatch Time	Avg User CPU Time	Avg Suspend Time	Avg QR CPU Time	Avg MS CPU Time	Avg RO CPU Time	Avg KY8 CPU Time	Avg J8 CPU Time	Avg L8 CPU Time	Avg S8 CPU Time
CDTS	14	.0043	.0171	.0016	.0013	.0028	.0013	.0000	.0000	.0000	.0000	.0000	.0000
CIRP	3965	.1561	10.6778	.1278	.0611	.0283	.0011	.0000	.0000	.0600	.0600	.0000	.0000
CIRR	15768	.1309	10.6563	.0024	.0012	.1285	.0010	.0002	.0000	.0000	.0000	.0000	.0000
CITS	17	.0028	.0034	.0012	.0010	.0016	.0010	.0000	.0000	.0000	.0000	.0000	.0000
CSMI	1320	.0059	.2249	.0010	.0005	.0049	.0005	.0000	.0000	.0000	.0000	.0000	.0000
CSOL	3	1887.33	1887.47	.6293	.4393	1886.70	.0001	.4392	.0003	.0000	.0000	.0000	.0000
DB2N	174	.0083	.0297	.0041	.0026	.0042	.0008	.0000	.0000	.0018	.0000	.0018	.0000
DB2U	636	.0021	.0290	.0017	.0011	.0004	.0006	.0000	.0000	.0005	.0000	.0005	.0000
JCIM	606	.1689	1.1021	.1423	.0801	.0266	.0009	.0000	.0000	.0791	.0791	.0000	.0000
JCIN	305	.1743	3.0177	.1533	.0731	.0210	.0009	.0000	.0000	.0722	.0722	.0000	.0000
JCI1	303	.1069	.5476	.0765	.0431	.0304	.0010	.0000	.0000	.0421	.0421	.0000	.0000
JCI3	606	.1122	3.0357	.0859	.0414	.0263	.0009	.0000	.0000	.0404	.0404	.0000	.0000
JCI4	305	.1904	2.2279	.1592	.0807	.0312	.0011	.0000	.0000	.0796	.0796	.0000	.0000
JCI5	1212	.1097	2.3669	.0816	.0425	.0281	.0010	.0000	.0000	.0415	.0415	.0000	.0000
JCI6	304	.1666	1.2564	.1379	.0756	.0287	.0010	.0000	.0000	.0746	.0746	.0000	.0000
JCI7	304	.1134	1.9295	.0840	.0441	.0293	.0010	.0000	.0000	.0430	.0430	.0000	.0000
JDBM	608	.1766	1.2794	.1480	.0805	.0286	.0010	.0000	.0000	.0795	.0786	.0009	.0000
JDBN	303	.3321	2.5468	.3084	.1201	.0237	.0009	.0000	.0000	.1192	.1184	.0008	.0000
JDB1	306	.1284	1.9091	.0965	.0484	.0318	.0010	.0000	.0000	.0474	.0428	.0046	.0000
JDB3	609	.1160	2.4298	.0886	.0432	.0274	.0010	.0000	.0000	.0422	.0413	.0009	.0000
JDB4	303	.2013	3.7688	.1701	.0925	.0312	.0010	.0000	.0000	.0915	.0883	.0032	.0000
JDB5	1215	.1266	4.8343	.0965	.0485	.0301	.0010	.0000	.0000	.0475	.0443	.0032	.0000
JDB6	304	.2036	10.4893	.1744	.0841	.0292	.0010	.0000	.0000	.0831	.0797	.0034	.0000
JDB7	304	.1283	.9939	.0951	.0487	.0332	.0010	.0000	.0000	.0478	.0431	.0046	.0000
SQLM	605	.1727	2.1050	.1449	.0787	.0278	.0010	.0000	.0000	.0777	.0768	.0009	.0000
SQLN	303	.3421	3.9273	.3195	.1159	.0226	.0009	.0000	.0000	.1150	.1141	.0009	.0000
SQL1	302	.1295	2.4471	.0990	.0485	.0305	.0010	.0000	.0000	.0475	.0428	.0047	.0000
SQL3	604	.1270	7.1156	.0995	.0474	.0275	.0010	.0000	.0000	.0464	.0455	.0009	.0000
SQL4	303	.1893	2.1465	.1558	.0807	.0335	.0010	.0000	.0000	.0797	.0765	.0032	.0000
SQL5	1209	.1232	2.8840	.0918	.0481	.0314	.0010	.0000	.0000	.0471	.0438	.0033	.0000
SQL6	303	.1811	1.1894	.1500	.0790	.0311	.0010	.0000	.0000	.0780	.0743	.0037	.0000
SQL7	302	.1229	.9066	.0910	.0484	.0319	.0010	.0000	.0000	.0474	.0427	.0047	.0000

```
****************************** BOTTOM OF DATA ******************************************************************************
```

Figure 17-19 Default CPU Analysis Summary report

Since we have CMF performance records of different systems, we can also ask for the list of transactions per CICS system. To obtain this, we only have to add the APPLID to our Report Form. Figure 17-20 shows that we added APPLID as the first sort field. The sort order is also ascending.

```
  File  Edit  Confirm  Upgrade  Options  Help
--------------------------------------------------------------------------------
                     EDIT SUMMARY Report Form - CPUSUM      Row 1 of 17 More: >
Command ===>                                                   Scroll ===> CSR

Description  . . . Transaction CPU Analysis          Version (VRM): 620

Selection Criteria:
    Performance

   Field
/  Name +    S Type    Fn   Description
   APPLID    A              CICS Generic APPLID
   TRAN      A              Transaction identifier
   TASKCNT                  Total Task count
   RESPONSE            AVE  Transaction response time
   RESPONSE            MAX  Transaction response time
   DISPATCH    TIME    AVE  Dispatch time
   CPU         TIME    AVE  CPU time
```

Figure 17-20 Modified CPUSUM Report Form

Figure 17-21 shows the new Summary report. You see that the result shows all transactions executed per APPLID. You receive an additional line that gives the averages per APPLID as well.

```
 V1R3M0                                                CICS Performance Analyzer
                                                         Performance Summary
                                                 ____________________________________________
SUMM0001 Printed at 15:01:47 11/08/2003     Data from 14:19:50 11/05/2003 to 15:04:59 11/05/2003                    Page       1
Transaction CICS TCB CPU Analysis - Summary

                                Avg      Max       Avg      Avg      Avg      Avg      Avg      Avg      Avg      Avg      Avg
APPLID   Tran       #Tasks Response Response Dispatch User CPU  Suspend   QR CPU   MS CPU   RO CPU  KY8 CPU   J8 CPU   L8 CPU
                                Time     Time     Time     Time     Time     Time     Time     Time     Time     Time     Time
SCSCPJA6 CIRP         1806    .1686  10.6778    .1375    .0577    .0311    .0010    .0000    .0000    .0567    .0567    .0000
SCSCPJA6 CSMI         1320    .0059    .2249    .0010    .0005    .0049    .0005    .0000    .0000    .0000    .0000    .0000
SCSCPJA6 JCIM          270    .1845   1.0295    .1535    .0767    .0310    .0009    .0000    .0000    .0757    .0757    .0000
SCSCPJA6 JCIN          149    .2101   3.0177    .1855    .0718    .0245    .0009    .0000    .0000    .0710    .0710    .0000
.
.
SCSCPJA6 SQL5          582    .1342   2.8840    .0999    .0453    .0343    .0009    .0000    .0000    .0444    .0411    .0033
SCSCPJA6 SQL6          137    .1972   1.1894    .1626    .0754    .0346    .0010    .0000    .0000    .0744    .0708    .0036
SCSCPJA6 SQL7          139    .1373    .9066    .1007    .0459    .0366    .0009    .0000    .0000    .0450    .0403    .0047
-------------------------------------------------------------------------------------------------------------------------------------
SCSCPJA6              8626    .1431  10.6778    .1152    .0496    .0279    .0009    .0000    .0000    .0487    .0476    .0011

SCSCPJA7 CDTS           14    .0043    .0171    .0016    .0013    .0028    .0013    .0000    .0000    .0000    .0000    .0000
SCSCPJA7 CIRP         2159    .1456  10.2244    .1197    .0639    .0259    .0011    .0000    .0000    .0629    .0629    .0000
SCSCPJA7 CITS           17    .0028    .0034    .0012    .0010    .0016    .0010    .0000    .0000    .0000    .0000    .0000
.
.
SCSCPJA7 SQL5          627    .1130   1.2724    .0842    .0506    .0288    .0010    .0000    .0000    .0496    .0463    .0033
SCSCPJA7 SQL6          166    .1678   1.0332    .1396    .0819    .0282    .0010    .0000    .0000    .0809    .0772    .0037
SCSCPJA7 SQL7          163    .1107    .5799    .0828    .0504    .0279    .0010    .0000    .0000    .0494    .0447    .0047
-------------------------------------------------------------------------------------------------------------------------------------
SCSCPJA7              9329    .3291  1887.47    .1032    .0577    .2259    .0010    .0000    .0000    .0567    .0555    .0012

SCSCPLA1 CIRR         8815    .1300  10.6563    .0024    .0012    .1276    .0010    .0002    .0000    .0000    .0000    .0000
SCSCPLA1 CSOL            1  1887.18  1887.18   1.0098    .7384  1886.17    .0000    .7384    .0000    .0000    .0000    .0000
-------------------------------------------------------------------------------------------------------------------------------------
SCSCPLA1              8816    .3441  1887.18    .0025    .0013    .3416    .0010    .0003    .0000    .0000    .0000    .0000

SCSCPLA2 CIRR         6953    .1319  10.3505    .0024    .0012    .1296    .0010    .0002    .0000    .0000    .0000    .0000
SCSCPLA2 CSOL            1  1887.33  1887.33    .8070    .5648  1886.53    .0000    .5648    .0000    .0000    .0000    .0000
-------------------------------------------------------------------------------------------------------------------------------------
SCSCPLA2              6954    .4033  1887.33    .0025    .0013    .4008    .0010    .0003    .0000    .0000    .0000    .0000
****************************** BOTTOM OF DATA ******************************************************************************
```

Figure 17-21 CPU Summary report with APPLID added as sort field

On the Performance Summary Report screen, it is also possible to specify an interval time. To use this time interval option, you need to specify the STOP or START field as a sort field. In this case, CICS PA accumulates the data for each interval in the report period and writes a report line for each. Figure 17-22 shows that we set the Time Interval option to 7:30 minutes to have our originally measured interval divided into two separate intervals. You can also see that the Performance selection criteria is active. To eliminate the influence of long running CICS transactions, we preferred to use the CICSEXCL Object List as well.

```
  File  Systems  Options  Help
-------------------------------------------------------------------------------
                     CROSS22 - Performance Summary Report
Command ===>

System Selection:                        Report Output:
 APPLID . .           +                   DDname . . . . . . . . . SUMM0001
 Image  . . SC66      +                   Print Lines per Page . .      (1-255)
 Group  . .           +

Report Format:
 Form . . . CPUSUM    +
 Title  . .



Processing Options:                            Reporting Options:
 Time Interval  . . . 00:07:30  (hh:mm:ss)        Exclude Totals

Selection Criteria:
    Performance  *
```

Figure 17-22 Performance Summary Report: Time Interval selection

Figure 17-23 shows the resulting report. This report shows the start time of the interval in the first column. You see the same pattern as in Figure 17-21 on page 371. The full dashed line separates the time interval reports.

```
 V1R3M0                                                CICS Performance Analyzer
                                                          Performance Summary
                                          ____________________________________________
SUMM0001 Printed at 16:50:21 11/08/2003     Data from 14:49:57 11/05/2003 to 15:04:59 11/05/2003                    Page       1
Transaction CICS TCB CPU Analysis - Summary

                                      Avg      Max       Avg      Avg      Avg      Avg      Avg      Avg      Avg      Avg
Start    APPLID   Tran       #Tasks Response Response Dispatch User CPU  Suspend   QR CPU   MS CPU   RO CPU  KY8 CPU   J8 CPU
Interval                              Time     Time     Time     Time     Time     Time     Time     Time     Time     Time
14:45:00 SCSCPJA6 CIRP          238    .2399   2.3418    .1991    .0591    .0408    .0010    .0000    .0000    .0581    .0581
14:45:00 SCSCPJA6 CSMI          263    .0058    .0951    .0011    .0005    .0046    .0005    .0000    .0000    .0000    .0000
14:45:00 SCSCPJA6 JCIM           22    .3219   1.0295    .2736    .0814    .0483    .0009    .0000    .0000    .0805    .0805
.
.
14:45:00 SCSCPJA6 SQL5           69    .2144   2.1352    .1687    .0488    .0457    .0009    .0000    .0000    .0478    .0446
14:45:00 SCSCPJA6 SQL6           18    .3026   1.1894    .2559    .0802    .0467    .0009    .0000    .0000    .0792    .0758
14:45:00 SCSCPJA6 SQL7           21    .2319    .9066    .1768    .0525    .0550    .0010    .0000    .0000    .0515    .0469
- - - - - - - - - - - - - - - - - - - - - - - - - - - - - - - - - - - - - - - - - - - - - - - - - - - - - - - - - - - - - - - - - - - -
14:45:00 SCSCPJA6             1194    .2030  10.4893    .1680    .0476    .0350    .0008    .0000    .0000    .0467    .0457

14:45:00 SCSCPJA7 CDTS           7    .0033    .0034    .0015    .0013    .0018    .0013    .0000    .0000    .0000    .0000
14:45:00 SCSCPJA7 CIRP         425    .1349  10.2244    .1122    .0640    .0227    .0010    .0000    .0000    .0630    .0630
.
.
14:45:00 SCSCPJA7 SQL5         132    .0862    .2718    .0654    .0510    .0207    .0010    .0000    .0000    .0501    .0469
14:45:00 SCSCPJA7 SQL6          33    .1234    .2179    .1036    .0825    .0198    .0010    .0000    .0000    .0815    .0779
14:45:00 SCSCPJA7 SQL7          29    .0902    .1379    .0706    .0503    .0195    .0010    .0000    .0000    .0493    .0447
- - - - - - - - - - - - - - - - - - - - - - - - - - - - - - - - - - - - - - - - - - - - - - - - - - - - - - - - - - - - - - - - - - - -
14:45:00 SCSCPJA7             1848    .1045  10.2244    .0849    .0594    .0196    .0010    .0000    .0000    .0584    .0572

14:45:00 SCSCPLA1 CIRR        1424    .1476  10.0224    .0036    .0012    .1440    .0010    .0002    .0000    .0000    .0000
- - - - - - - - - - - - - - - - - - - - - - - - - - - - - - - - - - - - - - - - - - - - - - - - - - - - - - - - - - - - - - - - - - - -
14:45:00 SCSCPLA1             1424    .1476  10.0224    .0036    .0012    .1440    .0010    .0002    .0000    .0000    .0000

14:45:00 SCSCPLA2 CIRR        1228    .1591  10.3505    .0037    .0012    .1554    .0010    .0002    .0000    .0000    .0000
- - - - - - - - - - - - - - - - - - - - - - - - - - - - - - - - - - - - - - - - - - - - - - - - - - - - - - - - - - - - - - - - - - - -
14:45:00 SCSCPLA2             1228    .1591  10.3505    .0037    .0012    .1554    .0010    .0002    .0000    .0000    .0000
-------------------------------------------------------------------------------------------------------------------------------------
14:45:00                      5694    .1477  10.4893    .0645    .0298    .0832    .0010    .0001    .0000    .0288    .0282
14:52:30 SCSCPJA6 CIRP         882    .1682  10.6778    .1385    .0581    .0297    .0010    .0000    .0000    .0571    .0571
14:52:30 SCSCPJA6 CSMI         682    .0058    .2249    .0009    .0005    .0048    .0005    .0000    .0000    .0000    .0000
14:52:30 SCSCPJA6 JCIM         150    .1684    .5653    .1392    .0748    .0292    .0009    .0000    .0000    .0739    .0739
.
.
```

Figure 17-23 CPU Summary report using Time Interval option

17.3.3 Performance List Extended report

The Performance List Extended report provides similar functionality to the Performance List report except that it sorts the CMF performance records prior to reporting. The sort fields are defined in the Report Form, providing the flexibility to present CMF performance data in your preferred order.

One of the sort fields can specify a limit to restrict the output. For example, you can request sorting by transaction ID (ascending) and response time (descending). Specifying a limit of 20 restricts reporting to the 20 worst performing transactions of each transaction ID. At a glance, this report can highlight poor performing transactions. Then by adjusting the Report Form, you can drill down to determine the reasons for poor performance.

As examples, the sample provided Report Forms contain two LISTX Report Forms, BADCPU and BADRESP. We now look at BADCPU. The content of this Report Form is shown in Figure 17-24. It shows TRAN as a first sort field. Within this selection, we sort by CPU time but print only the number as specified in the limit field. Notice that for this example we changed the number from 20 to 3.

```
  File  Edit  Confirm  Upgrade  Options  Help
--------------------------------------------------------------------------------
                      EDIT LISTX Report Form - BADCPU       Row 1 of 16 More: >
Command ===>                                                   Scroll ===> CSR

Description  . . . Top 3 Worst CPU Times             Version (VRM): 620

Selection Criteria:
    Performance

   Field
/  Name +    S Type    Limit     Description
   TRAN      A                   Transaction identifier
   CPU       D TIME    3         CPU time
   USERID    *                   User ID
   TASKNO                        Transaction identification number
   STOP      * TIMET             Task stop time
   RESPONSE  *                   Transaction response time
   DISPATCH  * TIME              Dispatch time
   DISPATCH  * COUNT             Dispatch time
   CPU       * TIME              CPU time
   SUSPEND   * TIME              Suspend time
   SUSPEND   * COUNT             Suspend time
   DISPWAIT  * TIME              Redispatch wait time
   DISPWAIT  * COUNT             Redispatch wait time
   IRWAIT      TIME              MRO link wait time
   EOR                           ---------------- End of Report --------------
   EOX                           ---------------- End of Extract -------------
```

Figure 17-24 Default sample BADCPU LISTX Report Form

Figure 17-25 shows the report produced with this BADCPU LISTX Report Form.

```
 V1R3M0                                          CICS Performance Analyzer
                                                 Performance List Extended
                                                 ____________________________________________
LSTX0001 Printed at 17:48:55 11/08/2003 Data from 14:19:50 11/05/2003 to 15:04:59 11/05/2003                    Page       1
Top 3 Worst CPU Times

 Tran User CPU Userid     TaskNo Stop          Response Dispatch Dispatch User CPU  Suspend  Suspend DispWait DispWait  IR Wait
       Time                     Time            Time     Time     Count    Time     Time     Count    Time     Count    Time
 CDTS    .0015 CICSUSER    10706 14:56:30.349    .0171    .0020        3    .0015    .0151        3    .0006        2    .0000
 CDTS    .0014 CICSUSER    13656 15:01:25.989    .0042    .0016        3    .0014    .0026        3    .0000        2    .0000
 CDTS    .0014 CICSUSER     7370 14:51:19.251    .0033    .0016        3    .0014    .0017        3    .0000        2    .0000
 CIRP   2.2373 CICSUSER     9148 14:53:58.324   3.0009   2.9728       29   2.2373    .0282       29    .0032       28    .0037
 CIRP    .6662 CICSUSER     9230 14:54:03.007    .8143    .7646       25    .6662    .0497       25    .0003       24    .0000
 CIRP    .6548 CICSUSER     6342 14:50:03.883   1.0350   1.0238       25    .6548    .0113       25    .0028       24    .0000
 CIRR    .0027 CICSUSER    40192 14:50:23.972   1.0798    .0274       24    .0027   1.0524       24    .1576       23    .0000
 CIRR    .0026 CICSUSER    42853 14:55:00.721    .5283    .0120       23    .0026    .5162       23    .3014       22    .0000
 CIRR    .0026 CICSUSER    42852 14:55:00.969    .9883    .0390       24    .0026    .9492       24    .6158       23    .0000
 CITS    .0012 CICSUSER     6561 14:50:19.576    .0031    .0014        3    .0012    .0016        3    .0000        2    .0000
 CITS    .0012 CICSUSER     6567 14:50:19.815    .0031    .0016        3    .0012    .0016        3    .0000        2    .0000
 CITS    .0011 CICSUSER     8814 14:53:29.901    .0032    .0013        3    .0011    .0019        3    .0002        2    .0000
.
.
```

Figure 17-25 Top three worst CPU times per transaction

The output shows the worst CPU consumers per transaction. Since we saw more than two seconds for a CIRP transaction, we were wondering what would be the worst transactions within the whole system. To produce this information, we edited the BADCPU Report Form and removed the A for the TRAN field so that it is no longer a sort field, we changed the limit

value from 3 to 10 in the Limit field of the CPU field and changed the USERID field to APPLID. Figure 17-26 shows these modifications.

```
  File  Edit  Confirm  Upgrade  Options  Help
--------------------------------------------------------------------------------
                     EDIT LISTX Report Form - BADCPU       Row 1 of 16 More: >
Command ===>                                                  Scroll ===> CSR

Description  . . . Top 10 Worst CPU Times            Version (VRM): 620

Selection Criteria:
    Performance

   Field
/  Name +    S Type    Limit     Description
   TRAN      *                   Transaction identifier
   CPU       D TIME    10        CPU time
   APPLID    *                   CICS Generic APPLID
   TASKNO                        Transaction identification number
   STOP      * TIMET             Task stop time
   RESPONSE  *                   Transaction response time
```

Figure 17-26 Modified BADCPU Report Form

Figure 17-27 shows the result of running with this Report Form.

```
 V1R3M0                                          CICS Performance Analyzer
                                                 Performance List Extended
                                                 ____________________________________________
LSTX0001 Printed at 17:55:19 11/08/2003 Data from 14:19:50 11/05/2003 to 15:04:59 11/05/2003                    Page       1
Top 10 Worst CPU Times

 Tran User CPU APPLID     TaskNo Stop          Response Dispatch Dispatch User CPU  Suspend  Suspend DispWait DispWait  IR Wait
        Time                    Time            Time     Time     Count    Time     Time     Count    Time     Count    Time
 JDB5   3.2922 SCSCPJA6     9452 15:01:45.653   4.8343   4.8172       43   3.2922    .0171       43    .0023       42    .0000
 JDB4   2.8532 SCSCPJA7     9952 14:55:13.922   3.7688   3.7538       49   2.8532    .0149       49    .0005       48    .0000
 SQL3   2.3613 SCSCPJA7    13497 15:01:08.403   7.1156   7.0732       31   2.3613    .0424       31    .0225       30    .0000
 CIRP   2.2373 SCSCPJA7     9148 14:53:58.324   3.0009   2.9728       29   2.2373    .0282       29    .0032       28    .0037
 JDB6   1.0107 SCSCPJA6     2892 14:50:08.372  10.4893  10.3844       43   1.0107    .1050       43    .0941       42    .0000
 SQLN    .9781 SCSCPJA6     3111 14:50:37.149   3.9273   3.9128       28    .9781    .0144       28    .0050       27    .0000
 JDBN    .9511 SCSCPJA6     8729 15:00:37.624   2.5468   2.5126       29    .9511    .0342       29    .0193       28    .0000
 JCI5    .9131 SCSCPJA6     3464 14:51:24.014   2.3669   2.3597       27    .9131    .0072       27    .0013       26    .0000
 JDBN    .9096 SCSCPJA6    10123 15:02:43.445   1.6267   1.6077       29    .9096    .0190       29    .0012       28    .0000
****************************** BOTTOM OF DATA ******************************************************************************
```

Figure 17-27 Top 10 of the worst CPU consumers

17.3.4 Cross-System Work report

Another way to look at the total system is to know where transactions are entering the system, where the resulting application programs run, and which type of requests are executed and where. The Cross-System Work report can be of help in this case because it correlates CMF performance records by network UOW ID. Since the Cross-System Work report only produces lists of transaction and no summaries, we recommend that you run this report for a rather short time period of data. You can use this report to understand a transaction flow, probably in combination with the Transaction Group report.

When you print a Cross-System Work report, CICS PA allows you to choose the kind of UOWs to see. We selected to have only those UOWs printed that have more than one record. The way to do so is to set Processing Options to 1 as shown in Figure 17-28.

```
  File  Systems  Options  Help
--------------------------------------------------------------------------------
                      CROSS - Cross-System Work Report
Command ===>

System Selection:                        Report Output:
 APPLID . .           +                   DDname . . . . . . . . . CROS0001
 Image  . . SC66      +                   Print Lines per Page . .      (1-255)
 Group  . .           +

Processing Options:
 1  1. UOWs with more than one record
    2. UOWs with a single record
    3. All UOWs

Report Format:
 Form . . .           +
 Title  . . UOW with more than one record


Selection Criteria:
    Performance
```

Figure 17-28 Processing Options selection

Figure 17-29 shows the two different cases we found in our output listing.

```
 V1R3M0                                          CICS Performance Analyzer
                                                     Cross-System Work
                                                 ____________________________
CROS0001 Printed at 12:34:38 11/14/2003 Data from 14:18:57 11/05/2003 to 15:04:59 11/05/2003                        Page       1
UOW with more than one record

                                     Request          Fcty  Conn                  UOW                 R              Response A
Tran Userid   SC TranType Term  LUName   Type   Program  T/Name Name NETName          Seq APPLID     Task T   Stop Time    Time   B

CIRP CICSUSER TO U        <AC3 SCSCPLA1 AP:     DFJIIRP  T/<AC3 PLA1 USIBMSC.SCSCPLA1    2 SCSCPJA7   6357 T 14:50:04.397    .2066
CSMI CICSUSER TO UMD      <AN1 SCSCPJA7 AP:F--- TRADERBL T/<AN1 PJA7 USIBMSC.SCSCPLA1    1 SCSCPJA6   2919 T 14:50:04.266    .0031
.
.
SX6  CICSUSER TP U        P000 SCSTP000 TR:PAA4          T/P000      USIBMSC.SCSTP000    1 SCSCPTA1  18675 T 14:51:19.768    .1127
SX6  CICSUSER TP U        T12  SCSCPTA1 AP:     DSWSX6VV S/P000 PTA1 USIBMSC.SCSTP000    1 SCSCPAA4  19744 T 14:51:19.736    .0792
```

Figure 17-29 Cross-System Work report

The first line is a CIRP transaction executing the initial program DFJIIRP. APPLID SCSCPJA7 states that this Request Processor task executes in system SCSCPJA7. LUNAME and NETNAME indicate that the request is coming from SCSCPLA1. This indicates that an IIOP request entered SCSCPLA1 where the request receiver task decided to send this request to SCSCPJA7. The MRO session ID on which this transaction request entered SCSCPJA7 is <AC3.

The second line is a CSMI transaction executing in SCSCPJA6. This indicates that a function shipping request came from SCSCPJA7. The Transaction Type of UMD indicates that this mirror transaction is for a Dynamic Program Link request. The program linked to is TRADERBL, as indicated in the PROGRAM field. The Request Type field is AP:F---, which means that under this mirror transaction a file request was executed. If the file request was not executed in a DPLed program but was a real function shipped file request, we would have seen a program name of DFHMIRS and a Request Type of FS:F---.

The second group shows a transaction SX6 that is initiated in system SCSCPTA1 from terminal P000. There is no program name provided because the transaction does not execute in this CICS system. Indeed, the Request Type field indicates that this TOR performed a transaction routing towards system ID PAA4. The second line indicates that the SX6 transaction executes with the same name in SCSCPAA4. The name of the initial program executed is DSWSX6VV.

You can tailor this Cross-System Work report to your needs by creating a LIST or LISTX Report Form. For this report, there is no difference between a LIST or LISTX Report Form as the sort sequences from a LISTX Report Set are ignored in this case.

Figure 17-30 shows the CROSSDET LISTX Report Form that we created to have other output in the Cross-System Work report.

```
  File  Edit  Confirm  Upgrade  Options  Help
--------------------------------------------------------------------------------
                     EDIT LISTX Report Form - CROSSDET    Row 1 of 267 More: >
Command ===>                                                 Scroll ===> CSR

Description  . . . List Extended Report Form        Version (VRM): 620

Selection Criteria:
    Performance

   Field
/  Name +    S Type    Limit     Description
   START     A TIMET             Task start time
   APPLID    *                   CICS Generic APPLID
   TRAN      *                   Transaction identifier
   PROGRAM   *                   Program name
   TASKNO    *                   Transaction identification number
   RSYSID    *                   Remote System ID
   TERM      *                   Terminal ID
   STYPE     *                   Transaction start type
   TRANTYPE                      Transaction type
   ORIGIN    *                   Transaction origin type
   NETNAME   *                   Originating System VTAM network name
   UOWID                         Network UOW ID
   UOWSEQ                        Network UOW Sequence Number
   EOR                           ---------------- End of Report --------------
```

Figure 17-30 List Extended Report Form

To have the report with the information as requested in the CROSSDET Report Form, we added the report name CROSSDET to the Form field in the Cross-System Work Reports panel and re-ran the report. Figure 17-31 shows that transactions belonging to the same network UOW ID are grouped the same way as before, and only the information printed in the individual records is different.

```
 V1R3M0                                              CICS Performance Analyzer
                                                     Cross-System Work Extended
                                                 ____________________________________________
CROS0001 Printed at  6:30:41 11/18/2003 Data from 14:18:57 11/05/2003 to 15:04:59 11/05/2003                        Page       1
UOW with more than one record

 Start        APPLID   Tran Program    TaskNo RSID Term SC TranType Origin NETName              Network       UOW
 Time                                                                                           UOW ID       SeqNo

 14:50:04.190 SCSCPJA7 CIRP DFJIIRP      6357      <AC3 TO U        MRO    USIBMSC.SCSCPLA1     7C741189BFA2     2
 14:50:04.263 SCSCPJA6 CSMI TRADERBL     2919      <AN1 TO UMD      MRO    USIBMSC.SCSCPLA1     7C741189BFA2     1
 .
 .
 14:51:19.655 SCSCPTA1 SX6  #######    18675 PAA4 P000 TP U        TERM   USIBMSC.SCSTP000     7C745982088F     1
 14:51:19.656 SCSCPAA4 SX6  DSWSX6VV    19744      T12  TP U        MRO    USIBMSC.SCSTP000     7C745982088F     1
```

Figure 17-31 Cross-System Work Extended report

17.3.5 MVS Workload Activity report

There are two options for the MVS Workload Activity report. You can request a list report which is very similar to the Cross-System Work report because it also uses the network UOW ID to correlate transactions that execute in one single CICS region or multiple CICS regions through transaction routing, function shipping, or distributed transaction routing. Otherwise, you can ask for a Workload Activity Summary report that summarizes response time by WLM service and report classes which can be used to set or verify the goals that were defined to the WLM.

To show reporting on different service classes, we defined one of our AORs, SCSCPJA7, to execute in a different service class (CICSWORK) than all the other regions (CICSDFLT). We also changed the CICSPlex SM workload specification to use the GOAL mode rather than the default QUEUE mode that we used for all other scenarios.

Figure 17-32 shows the Workload Activity Report setup screen.

```
  File  Systems  Options  Help
 ------------------------------------------------------------------------------
                         CROSS - Workload Activity Report
 Command ===>

 System Selection:                          Report Output:
  APPLID . .          +                      DDname . . . . . . . . . WKLD0001
  Image  . . SC66     +                      Print Lines per Page . .      (1-255)
  Group  . .          +

 Reports Required:                          Processing Options:
  /  List                                    Peak Percentile . . . 90   (50-100)
     Summary     Include EXE Y tasks

 Report Format:
  Title  . .


 Selection Criteria:
     Performance
```

Figure 17-32 Workload Activity Report setup screen

The List report is selected by entering a slash character next to the List option. Figure 17-33 shows the Workload Manager Activity List report.

```
 V1R3M0                                                CICS Performance Analyzer
                                                     Workload Manager Activity List
                                                  ___________________________________________
WKLD0001 Printed at 12:21:49 11/18/2003 Data from 14:18:57 11/05/2003 to 15:04:59 11/05/2003                          Page       1


                                      Request           Fcty  Conn Service  Report                    R                  Response A
Tran Userid   SC TranType Term  LUName   Type   Program  T/Name Name Class    Class    APPLID     Task T  P  C  Stop Time   Time   B

CSOL CICSUSER U  S                     AP:     DFHSOL               CICSDFLT WASC     SCSCPLA1      3 D BTE   14:51:17.56 1887.18
. .
CSOL CICSUSER U  S                     AP:     DFHSOL               CICSWORK WASC     SCSCPJA7      3 D BTE   14:54:01.39 1887.47
. .
CIRR CICSUSER U  U                     AP:     DFHIIRRS             CICSDFLT WASC     SCSCPLA1  39983 T BTE   14:50:07.89

JDB6 CICSUSER TO U        <AC1 SCSCPLA1 AP:     DFJIIRP  T/<AC1 PLA1                   SCSCPJA6   2892 T EXE N 14:50:08.37 10.4893
. .
CIRP CICSUSER TO U        <AC3 SCSCPLA1 AP:     DFJIIRP  T/<AC3 PLA1                   SCSCPJA7   6357 T EXE N 14:50:04.39   .2066
CSMI CICSUSER TO UMD      <AN1 SCSCPJA7 AP:F--- TRADERBL T/<AN1 PJA7                   SCSCPJA6   2919 T EXE N 14:50:04.26   .0031
. .
SX6  CICSUSER TP U        P000 SCSTP000 TR:PAA4          T/P000      CICSDFLT WASC     SCSCPTA1  18675 T BTE   14:51:19.76   .1127
SX6  CICSUSER TP U        T12  SCSCPTA1 AP:     DSWSX6VV S/P000 PTA1                   SCSCPAA4  19744 T EXE Y 14:51:19.73   .0792
. .
DB2U CICSUSER TO U        P000 SCSTP000 TR:PJA7          T/P000      CICSDFLT WASC     SCSCPTA1  18920 T BTE   14:52:13.45
DB2U CICSUSER TO U        <AY1 SCSCPTA1 AP:     PROGDB2U S/P000 PTA1                   SCSCPJA7   7918 T EXE Y 14:52:13.45
```

Figure 17-33 Workload Manager Activity List report

The MVS Workload Manager divides the life span of a transaction into two phases: a begin-to-end phase and an execution phase. Applied to the CICS environment, this means that the phase where the TOR receives a transaction and ends it is called the begin-to-end phase. The phase where the transaction moves into an AOR, FOR or elsewhere and is processed is called the execution phase. For a more detailed explanation about Workload Manager state information, refer to *OS/390 V2R10.0 MVS Workload Management Services*, GC28-1773.

The first two lines of the report show CSOL transactions. The TranType column indicates that these are system transactions. This first CSOL transaction is running in CICS system with APPLID SCSCPLA1. Address space SCSCPLA1 has WLM service class CICSDFLT. The second CSOL transaction is running in SCSCPJA7. This address space has service class CICSWORK. Only SCSCPJA7 has service class CICSWORK. The whole installation has only one report class, WASC. As explained in 17.3.1, “Performance Totals report” on page 362, CSOL is running permanently but about every 30 minutes, a CMF performance record is written. This explains the D in the RT field. This is a record output written by a user event monitoring point DELIVER request. The P column displays the phase information.

For the CSOL transactions, we see BTE, standing for Begin-To-End, indicating that this part of the CSOL transaction execution started and ended in this CICS region without going to another CICS region. The completion field is always blank for BTE phase transactions.

The next line shows a CIRR transaction. The U in the TranType field indicates that this is a user transaction. CIRR is an IIOP request receiver task that starts a request processor task but is not related to it. As request receiver tasks and request processor tasks have different network UOW IDs, they are not grouped together like function shipped mirror tasks or transaction routed tasks. A request receiver is considered to run on its own and thus it is shown as a BTE phase task. The record type is T, indicating that the CMF performance record is written at task termination.

The next transaction in the list is a JDB6 transaction. This transaction is running as a request processor task because it is started by an IIOP request receiver task. For the same reason as for the CIRR transaction, a request processor task appears as a single record. This transaction executes an SQL request that is executed by DB2. This means that only a part of the execution took place in SCSCPJA6. The other part took place in DB2 but we do not have

SMF records from the DB2 region. Because only a part of the execution took place in this region, we see EXE N in the combined Phase and Completion fields.

The following part of the report corresponds to the transaction pairs described in 17.3.4, “Cross-System Work report” on page 375. The first transaction is again a request processor task. However, as we saw before, this task does a Dynamic Program Link to SCSCPJA6 where it performs a file request. Here also, because only a part of the execution took place in each region, we see them flagged as EXE N.

Next two records describe the behavior of transaction SX6. This transaction is attached in TOR SCSCPTA1 but is routed to AOR SCSCPAA4. The transaction starts and terminates in the TOR. That is why this task is flagged as a `BTE` phase task. The execution phase is done completely in the AOR. This is reflected by the EXE Y.

For tasks with phase EXE, the service and report classes are not provided in the List report. However, when CICS starts an EXE phase task on behalf of an originating task, a WLM token is passed with it to identify the service class. The EXE phase tasks always has the same service class as the originating task. This explains why in this last case, the EXE Y task DB2U that runs on SCSCPJA7, have a service class of CICSDFLT, and not CICSWORK. You can verify this in the WLM Summary report shown in Figure 17-34.

Next to the Workload Activity List report, you can also ask for a Workload Summary report which summarizes response times by WLM service and report classes. The report can be run for BTE phase transactions only but you can also ask to include the EXE Y transactions in the report. The selection of the Summary report and the inclusion of the EXE Y tasks, is done on the Workload Activity Report panel under the heading Reports Required. You can see this in Figure 17-32 on page 378.

Figure 17-34 shows the Workload Manager Activity Summary reports arranged by Service Class and by Report Class.

```
 V1R3M0                                          CICS Performance Analyzer
                                      Workload Manager Activity Summary by Service Class
                                      ___________________________________________________
WKLD0001 Printed at 16:41:47 11/18/2003 Data from 14:18:57 11/05/2003 to 15:04:59 11/05/2003                    Page       1


Service                                   -------------- Response Time --------------
Class      APPLID      Phase        #Tasks     Average     Std Dev     90% Peak    Maximum

CICSDFLT   SCSCPAA1    BTE              51       .0377       .1073       .1753       .5600
           SCSCPAA4    BTE              17     111.043     457.767     697.900     1887.44
           SCSCPLA1    BTE            8816       .3441     20.0989     26.1108     1887.18
           SCSCPLA2    BTE            6954       .4033     22.6318     29.4172     1887.33
           SCSCPTA1    BTE            6624       .0356       .0792       .1371      1.2963
           SCSCPTA2    BTE            4680       .0412       .0891       .1555      1.1289
CICSDFLT   *Total*     BTE           27142       .3005     19.8410     25.7367     1887.44

CICSWORK   SCSCPJA7    BTE              32     58.9871     333.661     486.741     1887.47


                                      Workload Manager Activity Summary by Report Class

Report                                    -------------- Response Time --------------
Class      APPLID      Phase        #Tasks     Average     Std Dev     90% Peak    Maximum

WASC       SCSCPAA1    BTE              51       .0377       .1073       .1753       .5600
           SCSCPAA4    BTE              17     111.043     457.767     697.900     1887.44
           SCSCPJA7    BTE              32     58.9871     333.661     486.741     1887.47
           SCSCPLA1    BTE            8816       .3441     20.0989     26.1108     1887.18
           SCSCPLA2    BTE            6954       .4033     22.6318     29.4172     1887.33
           SCSCPTA1    BTE            6624       .0356       .0792       .1371      1.2963
           SCSCPTA2    BTE            4680       .0412       .0891       .1555      1.1289
```

Figure 17-34 WLM Activity Summary report

As requested, only BTE phase transactions are considered in this report. We see that service class CICSDFLT covers all regions except SCSCPJA7 which runs in service class CICSWORK.

Since there is only one report class, SCSCPJA7 is grouped with the other regions. In this report, again we see some maximum response times of 1887 seconds. As explained in 17.3.1, “Performance Totals report” on page 362, this is because of the presence of the CSOL transaction. Its long response time has a negative influence on the other values of average, standard deviation and the 90% peak value.

Figure 17-35 shows the Workload Manager Activity Summary report produced with the same SMF input records, but here with the transaction group CICSEXCL specified for selection criteria to exclude all CICS long running transactions. We also chose to include the EXE Y phase transactions.

```
V1R3M0                                                CICS Performance Analyzer
                                          Workload Manager Activity Summary by Service Class

WKLD0001 Printed at 16:47:26 11/18/2003 Data from 14:49:53 11/05/2003 to 15:04:59 11/05/2003                    Page       1


Service                                          -------------- Response Time --------------
Class      APPLID      Phase         #Tasks     Average     Std Dev     90% Peak    Maximum

CICSDFLT   SCSCPAA1    BTE               51       .0377       .1073       .1753       .5600
           SCSCPAA1    EXE             1533       .0316       .0781       .1316      1.1133
           SCSCPAA4    BTE               16       .0186       .0271       .0534       .1149
           SCSCPAA4    EXE             8239       .0204       .0569       .0934      1.2754
           SCSCPJA7    EXE              810       .0035       .0043       .0090       .0297
           SCSCPLA1    BTE             8815       .1300       .2044       .3921     10.6563
           SCSCPLA2    BTE             6953       .1319       .1954       .3824     10.3505
           SCSCPTA1    BTE             6624       .0356       .0792       .1371      1.2963
           SCSCPTA2    BTE             4680       .0412       .0891       .1555      1.1289
CICSDFLT   *Total*     BTE            27139       .0919       .1685       .3079     10.6563
           *Total*     EXE            10582       .0207       .0587       .0960      1.2754
CICSWORK   SCSCPJA7    BTE               31       .0035       .0026       .0068       .0171

                                          Workload Manager Activity Summary by Report Class

Report                                           -------------- Response Time --------------
Class      APPLID      Phase         #Tasks     Average     Std Dev     90% Peak    Maximum

WASC       SCSCPAA1    BTE               51       .0377       .1073       .1753       .5600
           SCSCPAA1    EXE             1533       .0316       .0781       .1316      1.1133
           SCSCPAA4    BTE               16       .0186       .0271       .0534       .1149
           SCSCPAA4    EXE             8239       .0204       .0569       .0934      1.2754
           SCSCPJA7    BTE               31       .0035       .0026       .0068       .0171
           SCSCPJA7    EXE              810       .0035       .0043       .0090       .0297
           SCSCPLA1    BTE             8815       .1300       .2044       .3921     10.6563
           SCSCPLA2    BTE             6953       .1319       .1954       .3824     10.3505
           SCSCPTA1    BTE             6624       .0356       .0792       .1371      1.2963
           SCSCPTA2    BTE             4680       .0412       .0891       .1555      1.1289
```

Figure 17-35 WLM Activity Summary report with CICS system tasks excluded

We see that the report includes now also the EXE Y phase transactions. The values of the number of EXE Y phase transactions is one less for SCSCPAA4, SCSCPLA1, SCSCPLA2 and SCSCPJA7 compared to the previous report. These are the CSOL transactions that are not counted now. We now have a better distribution in the different values for the response times.

17.3.6 Using DB2

We followed exactly the instructions in 19.4.5, “Export HDB data sets to DB2” on page 441, to load our system data into a DB2 table that we called ITSO.CICSPATB.

In 17.3.3, “Performance List Extended report” on page 373, we calculated the top 10 of the worst CPU consumers. We used CICS PA and the provided sample LISTX Report Form, BADCPU. Using DB2, we show how to produce a report that shows the worst storage consumers.

To do so, we add the fields SC31CHWM (ECDSA) and SC31UHWM (EUDSA) and sort on this sum that we called TOTAL31, as shown in Example 17-2. We also calculate the sum of SC24CHWM (CDSA) and the SC24UHWM (UDSA). Next to that, we show the individual fields that were used in this calculation.

Example 17-2 Worst storage consumers query

```
SELECT
     TRAN,
     APPLID,
     TASKNO,
     (SC31CHWM + SC31UHWM) AS TOTAL31,
     (SC24CHWM + SC24UHWM) AS TOTAL24,
     SC31CHWM,
     SC31UHWM,
     SC24CHWM,
     SC24UHWM,
     SC31GSHR,
     SC24GSHR
  FROM ITSO.CICSPATB A
     WHERE 10 >= (SELECT COUNT(*)
                  FROM ITSO.CICSPATB B
                  WHERE  (A.SC31CHWM + A.SC31UHWM)
                              <= (B.SC31CHWM + B.SC31UHWM)
                 )
  ORDER BY TOTAL31 DESC;
```

Figure 17-36 shows the output of this query.

```
---------+---------+---------+---------+---------+---------+---------+---------+---------+---------+---------+---------+----
--
TRAN  APPLID         TASKNO     TOTAL31     TOTAL24     SC31CHWM    SC31UHWM    SC24CHWM    SC24UHWM    SC31GSHR    SC24GSHR
---------+---------+---------+---------+---------+---------+---------+---------+---------+---------+---------+---------+----
--
CWBA  SCSCPJA6       29847      8634288         576       32784      8601504           0         576           0           0
CWBA  SCSCPJA6       29835      8634256           0       32784      8601472           0           0           0           0
CWBA  SCSCPJA6       27816      8634240           0       32784      8601456           0           0           0           0
CWBA  SCSCPJA6       29956      8599248           0        5744      8593504           0           0           0           0
CWBA  SCSCPJA6       28401      8599248           0        5744      8593504           0           0           0           0
CWBA  SCSCPJA6       28405       120880           0        2400       118480           0           0           0           0
CWBA  SCSCPJA6       29840       120880           0        2400       118480           0           0           0           0
CWBA  SCSCPJA6       29960       120880           0        2400       118480           0           0           0           0
CWBA  SCSCPJA6       29915       120880           0        2400       118480           0           0           0           0
CWBA  SCSCPJA6       27822       120880           0        2400       118480           0           0           0           0
DSNE610I NUMBER OF ROWS DISPLAYED IS 10
DSNE616I STATEMENT EXECUTION WAS SUCCESSFUL, SQLCODE IS 100
---------+---------+---------+---------+---------+---------+---------+---------+---------+---------+---------+---------+----
```

Figure 17-36 Worst storage consumers query output

DB2 Version 7 introduced new SQL statements that allow you to select a limited number of rows. We used the FETCH FIRST 10 ROWS ONLY statement to create a query similar to the one shown in Figure 17-2. The query and the SPUFI output are shown in Figure 17-37.

```
---------+---------+---------+---------+---------+---------+---------+---------+---------+---------+---------+---------+---------+-
 SELECT
      TRAN,
      APPLID,
      TASKNO,
      (SC31CHWM + SC31UHWM) AS TOTAL31,
      (SC24CHWM + SC24UHWM) AS TOTAL24,
      SC31CHWM,
      SC31UHWM,
      SC24CHWM,
      SC24UHWM,
      SC31GSHR,
      SC24GSHR
   FROM ITSO.CICSPATB
   ORDER BY TOTAL31 DESC
   FETCH FIRST 10 ROWS ONLY
---------+---------+---------+---------+---------+---------+---------+---------+---------+---------+---------+---------+---------+-
TRAN  APPLID         TASKNO      TOTAL31      TOTAL24     SC31CHWM     SC31UHWM     SC24CHWM     SC24UHWM     SC31GSHR     SC24GSHR
---------+---------+---------+---------+---------+---------+---------+---------+---------+---------+---------+---------+---------+-
CWBA  SCSCPJA6        29847      8634288          576        32784      8601504            0          576            0            0
CWBA  SCSCPJA6        29835      8634256            0        32784      8601472            0            0            0            0
CWBA  SCSCPJA6        27816      8634240            0        32784      8601456            0            0            0            0
CWBA  SCSCPJA6        28401      8599248            0         5744      8593504            0            0            0            0
CWBA  SCSCPJA6        29956      8599248            0         5744      8593504            0            0            0            0
CWBA  SCSCPJA6        29960       120880            0         2400       118480            0            0            0            0
CWBA  SCSCPJA6        29915       120880            0         2400       118480            0            0            0            0
CWBA  SCSCPJA6        29840       120880            0         2400       118480            0            0            0            0
CWBA  SCSCPJA6        28405       120880            0         2400       118480            0            0            0            0
CWBA  SCSCPJA6        27822       120880            0         2400       118480            0            0            0            0
```

Figure 17-37 DB2 Version 7 query for CWBA transaction

The output of this SQL statement shows only CWBA transactions in region SCSCPJA6. The query shown in Figure 17-38 lists 10 different transactions with the worst storage usage from all of our CICS regions.

```
SELECT
      TRAN,
      APPLID,
      MAX(SC31CHWM + SC31UHWM) AS TOTAL31,
      MAX(SC24CHWM + SC24UHWM) AS TOTAL24
  FROM ITSO.CICSPATB
  GROUP BY TRAN,APPLID
  ORDER BY TOTAL31 DESC,TRAN ASC
  FETCH FIRST 10 ROWS ONLY ;
---------+---------+---------+---------+---------+---------+---------+---------+---------+---------+---------+---------+---------+--
TRAN  APPLID        TOTAL31      TOTAL24
---------+---------+---------+---------+---------+---------+---------+---------+---------+---------+---------+---------+---------+--
CWBA  SCSCPJA6      8634288          576
CLER  SCSCPJA6        97760         1168
CETR  SCSCPJA6        61632        12384
CIRP  SCSCPJA6        33248            0
CSMI  SCSCPJA6        32320            0
CEMT  SCSCPJA6        26256            0
CIRR  SCSCPLA2        21632            0
CIRR  SCSCPLA1        21632            0
CEOT  SCSCPJA6        21088           96
CECI  SCSCPJA6        21072           96
```

Figure 17-38 Worst storage consumers DB2 Version 7 query

18

Using CICS Performance Analyzer reports for problem determination

This chapter demonstrates how to use CICS Performance Analyzer (PA) reports to diagnose a new response time problem. The various CICS Performance Analyzer reports we use to analyze the problem are discussed in detail.

18.1 CICS VSAM problem determination scenario description

To produce useful and realistic performance data for the problem determination scenario project, we used a traditional 3270 COBOL VSAM application as referred to in other projects earlier in this book. We also added one new transaction, BR1.

The base application uses nine VSAM files. We chose to place the files in a File Owning Region (FOR) to mimic a common customer environment. We used the Teleprocessing Network Simulator (TPNS) to simulate a realistic 3270 workload environment.

The 3270 VSAM application workload consists of four business applications:

- **HotelRes**: A simple 3270 hotel reservation application using two VSAM data sets. Two transactions, HX1 and HX2, are available which drive the application.
- **Inventory**: An inventory tracking application. It mainly uses two transactions to manage the inventory. Transaction IX8 updates the inventory, and transaction IX2 is used to inquire about part locations within the inventory.
- **Specification**: A bill of material management application. It uses two transactions (PX2 and PX3) to inquire on information about part lists.
- **Stock**: A stock control application. Transaction SX2 is used to update any inventory, transaction SX4 allows you to insert new vendors, and transaction SX6 is used to delete parts from the stock. Our new transaction BR1 is part of this application. It performs inquiries on the vendor file.

Figure 18-1 illustrates the VSAM file usage of the entire workload. We do not describe non-VSAM related aspects of the workload, such as program and map design, since they are not relevant to our problem determination scenario.

Refer to Chapter 5, “System setup and scenario overview” on page 129, for a full description of the CICS environment setup that we used to run the workload.

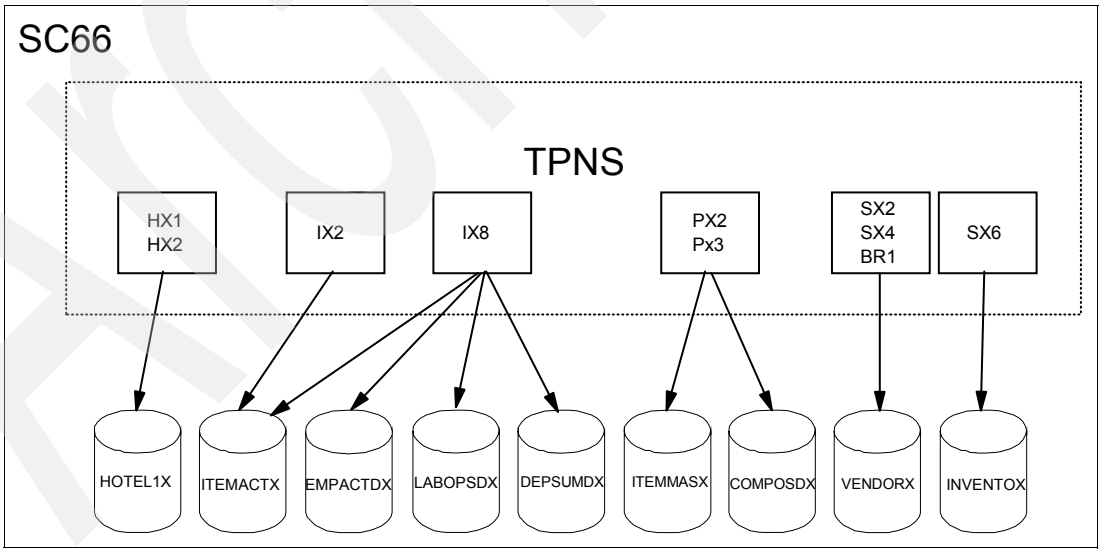

Figure 18-1 3270 VSAM application workload

18.1.1 Workload generation

We used Teleprocessing Network Simulator (TPNS) to generate an appropriate 3270 VSAM workload for our scenario. TPNS is a terminal and network simulation tool. You can find a

brief overview of its capabilities in 6.2.1, “RLS workload generation” on page 141. The only difference between what we used for this scenario and what is described in 6.2.1, “RLS workload generation” on page 141, is the list of transactions and the probability of distribution for our workload. Example 18-1 shows our transaction list and how we specified the probability of distribution for our workload scenario.

Example 18-1 Probability of distribution

```
1        PATH  PX3,PX2,IX8,IX1,IX2,HX1,
               SX6,SX2,SX4,TX1,BR1
*
1        DIST  90,100,80,30,60,30,
               100,30,20,40,40
```

18.1.2 Performance objectives

The performance objectives and priorities depend very much on user expectations. From our previous experiences with the application and the files in an FOR configuration, we know what average response times we can expect for different transactions. From the point of view of a terminal user, this is the most important characteristic.

Table 18-1 summarizes our performance objectives.

Table 18-1 VSAM FOR scenario performance objectives

Application	Transaction	Response average	Response maximum
HOTEL	HX1	< 0,02	0,2
INVENTORY	IX8	<0,05	0,3
INVENTORY	IX2	<0,03	0,28
SPECIFIC	PX2,PX3	<0,04	0,46
STOCK	SX2 SX4,SX6 BR1	<0,06 <0,03 <0,01	0,8 0,3 0,08

We are ready to start the VSAM workload using TPNS. We gather the necessary baseline performance data and analyze the results using a CICS Performance Analyzer summary report.

18.2 Running the scenario

This section describes the tasks that we performed to collect the performance data for our VSAM application. First we used CICS Performance Analyzer functionality to provide an overview of the performance behavior of the application. We performed the following steps:

1. Start TPNS and run the entire application for about 15 minutes. The application runs through region PAA1, which is used as both a TOR and AOR, a setup common in many environments, and PTA1, which was optimized to function as an FOR for this scenario.
2. Stop TPNS.

3. Switch the SMF data sets. Note the name of the archived SMF data set that contains the performance data.
4. Create the baseline summary performance report using CICS Performance Analyzer.

18.2.1 Collecting SMF data

During our TPNS run, the SMF data sets filled up and switched a number of times. We kept track of the name of each archive SMF data set produced during the test. After we ran TPNS for about 15 minutes, we stopped TPNS, switched SMF data sets, and obtained the name of the final archived SMF data set. We ran a separate extract on all the archived SMF data sets created during the test to create a single data set that we would use for reporting. The sample job in Example 18-2 was used to do this. This is an optional step that we performed for two reasons.

- The archived SMF data on our test system was kept in generation data group (GDG) data sets. We did not want our test data to roll off and be deleted before we completed our analysis.
- We wanted only a subset of all SMF data produced. The sample job in Example 18-2 only selects SMF record types 110, 101, 116, and 88. Reporting on this smaller extract is faster.

Example 18-2 Sample job to extract a subset of SMF records

```
//SMFPA     JOB ACCNT#,'CICSRS7     ',MSGLEVEL=(1,1),
//    NOTIFY=&SYSUID,REGION=5M
//*******************************************************************
//*                                                                 *
//* This job extracts selected SMF records to a separate file.  The *
//* new file contains SMF records used by CICS Performance Analyzer *
//*                                                                 *
//*******************************************************************
//EXTRACT EXEC PGM=IFASMFDP
//INDD      DD DISP=SHR,DSN=SMFDATA.CICSRECS.G0164V00
//          DD DISP=SHR,DSN=SMFDATA.CICSRECS.G0165V00
//          DD DISP=SHR,DSN=SMFDATA.CICSRECS.G0166V00
//OUTDD     DD DISP=OLD,DSN=CICSRS7.SMF110.TESTCASE
//SYSUDUMP  DD SYSOUT=*
//SYSPRINT  DD SYSOUT=*
//SYSIN     DD *
     INDD(INDD,OPTIONS(DUMP))
     OUTDD(OUTDD,TYPE(110,101,116,88))
     START(1006)
     END(1022)
/*
//
```

For an explanation about how to use program IFASMFDP, see *z/OS V1R4.0 MVS System Management Facilities (SMF)*, SA22-7630.

18.2.2 Updating system definitions

CICS Performance Analyzer can automatically populate your system's definitions with details extracted from SMF files. To check that we are using the correct SMF data set and that we collected performance data for all the systems, we used the Take-up function first.

To perform the data take-up from our SMF extract, we performed these steps:

1. From the CICS Performance Analyzer Primary Option Menu, select option 1.
2. One the System Definitions menu, select option 4.
3. Update the Data Take-Up from SMF screen with the SMF data set name as shown in Figure 18-2. Press Enter to generate a batch job to extract the details from the SMF data set.

When the job completes, you are prompted to update the system definitions with the results of the batch job. The prompt appears when you arrive at the System Definitions screen the next time.

```
------------------------- System Definitions -------------------------
   File  Options  Help
 ---------------------------------------------------------------------
                        Data Take-Up from SMF
 Command ===>

 Specify the SMF File for data take-up.

 Data Set Name . . . 'CICSRS7.SMF110.TESTCASE'

 Specify details if data set is not cataloged:
  UNIT  . . . . .          +       VOLSER  . . .        +
  SEQ Number  . .      (1 to 255)

 Execution Mode:
 2  1. Submit Batch JCL
    2. Edit Batch JCL
```

This is the SMF data set we created using the job in Example 18-2

We select Execution Mode option 2 to edit the JCL first

Figure 18-2 Data Take-Up from SMF screen

When the generated batch job completed, we verified that we had SMF records for MVS image SC66 as well as for the CICS systems participating in the workload. We also checked that the time interval of our TPNS run was processed using this SMF data set. Figure 18-3 shows the output that was produced by the take-up job.

```
V1R3M0    13:34:20  9/24/2003                    CICS Performance Analyzer                          Page     1
                                                     Take-up from SMF
                                                     ________________

 CPA2012I  Processing started for SMF file SMFIN001
 CPA2017I  SMF records for System SC66 start at 9/24/2003 10:06:00.06
 CPA2014I  CMF record for CICS system found, APPLID=SCSCPAA1 Release=6.2.0
 CPA2014I  CMF record for CICS system found, APPLID=SCSCPTA1 Release=6.2.0
 CPA2014I  CMF record for CICS system found, APPLID=SCSCPFA1 Release=5.3.0
 CPA2014I  CMF record for CICS system found, APPLID=SCSCPJA3 Release=6.2.0
 CPA2014I  CMF record for CICS system found, APPLID=SCSCPJA6 Release=6.2.0
 CPA2014I  CMF record for CICS system found, APPLID=SCSCPJA7 Release=6.2.0
 CPA2014I  CMF record for CICS system found, APPLID=SCSCPTA2 Release=6.2.0
 CPA2014I  CMF record for CICS system found, APPLID=SCSCPAA4 Release=6.2.0
 CPA2016I  MVS System Logger record found, System=SC66LOGR
 CPA2015I  DB2 Accounting record found, DB2 SSID=D7Q2 Release=7.1
 CPA2014I  CMF record for CICS system found, APPLID=SCSCPJA9 Release=6.2.0
 CPA2013I  Processing ended for SMF file SMFIN001 - 11 system(s) found
 CPA2000I  Take-up processing has completed, RC=0
```

Figure 18-3 Take-Up from SMF output

Take-up processing updates the system definitions automatically. From the System Definitions Menu, we selected option 1 to open the Systems Definitions screen. Figure 18-4

shows the System Definition screen after processing Take-Up from SMF. It shows that the CICS systems we used were added automatically during take-up processing.

```
File  Edit  Filter  View  Options  Help
--------------------------------------------------------------------------------
                              System Definitions                Row 1 from 12
Command ===>                                                  Scroll ===> CSR

Select a System to edit its definition, SMF Files and Groups.
                                                                    SMF Files
/   System   Type     Image                Description              System
  S SC66     Image             System added by take-up              SC66
    SCSCPAA1 CICS     SC66     System added by take-up              SC66
    SCSCPTA1 CICS     SC66     System added by take-up              SC66
    SCSCPFA1 CICS     SC66     System added by take-up              SC66
    SCSCPJA3 CICS     SC66     System added by take-up              SC66
    SCSCPJA6 CICS     SC66     System added by take-up              SC66
    SCSCPJA7 CICS     SC66     System added by take-up              SC66
    SCSCPTA2 CICS     SC66     System added by take-up              SC66
    SCSCPAA4 CICS     SC66     System added by take-up              SC66
    SC66LOGR Logger   SC66     System added by take-up              SC66
    D7Q2     DB2      SC66     System added by take-up              SC66
    SCSCPJA9 CICS     SC66     System added by take-up              SC66
********************************* End of list *********************************
```

Figure 18-4 System Definitions after Take-Up from SMF

We typed line action S next to the SC66 Image entry to select it. Figure 18-5 shows the MVS Image screen that is displayed.

```
---------------------------- System Definitions -----------------------------
   File  Edit  View  Options  Help
 ---------------------------------------------------------------------------
                                MVS Image                Row 1 of 1 More: >
 Command ===>                                            Scroll ===> CSR

 MVS Image definition:
  MVS Image  . . . . . SC66
  Description  . . . . System added by take-up

 / Exc             SMF Data Set Name +                UNIT +  SEQ VOLSER +
      'CICSRS7.SMF110.TESTCASE'                      DASD
 ********************************* End of list ****************************
```

Figure 18-5 System Definition for MVS Image after Take-Up from SMF

We verified that the SMF data set name listed was the one we used in our take-up job. We pressed F3 to return to the System Definitions screen. Out of curiosity, we selected a few more entries from the table by typing line action S, and then pressing F3 repeatedly until we returned to the CICS Performance Analyzer Primary Option Menu.

18.3 Producing the baseline Performance Summary report

This section explains how we produced our baseline Performance Summary Report.

Before we could quantitatively measure a reported response time problem, we needed to know how an application performed in the past. Often times we can detect minor changes in performance of tasks before they become noticeable to users, or before minor performance problems become large financial bills for customers with a charge-back system. To understand our current application, we produced a Performance Summary Report.

18.3.1 Creating the Object List

One of our goals in producing the reports for our application is to eliminate entries for non-application related transactions. This allows us to focus purely on our application, and not on other tasks. CICS Performance Analyzer gives us the ability to define a list of those transactions which belong to our application and then produce reports and extracts which contain only on those transactions. To do this, we created an Object List.

The process of creating an Object List is discussed in 2.12, “Maintaining Object Lists” on page 56. For our application, we created an Object List called VSAMFSHP with the 10 transactions shown in Figure 18-6.

```
File  Edit  Confirm  Options  Help
--------------------------------------------------------------------------------
                        EDIT Object List - VSAMFSHP         Row 1 to 10 of 10
Command ===>                                                 Scroll ===> CSR

Description  . . . . CICS PA Object List

Specify the Object List values:

/   1st Value   2nd Value   Sublist
    BR1
    CSMI
    HX1
    IX2
    IX8
    PX2
    PX3
    SX2
    SX4
    SX6
********************************* End of list *********************************
```

These are the only transactions we are interested in for our application

Figure 18-6 Object List VSAMFSHP

We included all transactions for our application and the CICS mirror transaction CSMI. We included CSMI because our application environment uses function shipping. File access to remote files by the application was done under the mirror transaction, not our application transaction.

18.3.2 Creating the Report Set

To begin creating our report, we created a Report Set. We selected option `2` from the CICS Performance Analyzer Primary Option Menu. The Report Sets screen is displayed.

On the command line, we typed `NEW` and pressed Enter. On the New Report Set screen, we entered BASELINE for the name of the Report Set, and then pressed Enter. The Report Set screen shown in Figure 18-7 was displayed.

```
File  Systems  Confirm  Options  Help
--------------------------------------------------------------------------------
EDIT                      Report Set - BASELINE                    Row 1 of 34
Command ===>                                                  Scroll ===> CSR

Description . . . CICS PA Report Set

Enter "/" to select action.

             ** Reports **                            Active
     -       Options                                    No
                  Global                                No
     -       Selection Criteria                         No
                  Performance                           No
                  Exception                             No
     -       Performance Reports                        No
                  List                                  No
                  List Extended                         No
             S    Summary                               No
                  Totals                                No
                  Wait Analysis                         No
                  Cross-System Work                     No
                  Transaction Group                     No
                  BTS                                   No
                  Workload Activity                     No
     -       Exception Reports                          No
                  List                                  No
                  Summary                               No
     -       Transaction Resource Usage Reports         No
                  File Usage Summary                    No
                  Temporary Storage Usage Summary       No
                  Transaction Resource Usage List       No
     -       Subsystem Reports                          No
                  DB2                                   No
                  WebSphere MQ                          No
     -       System Reports                             No
                  System Logger                         No
     -       Performance Graphs                         No
                  Transaction Rate                      No
                  Transaction Response Time             No
     -       Extracts                                   No
                  Cross-System Work                     No
                  Export                                No
                  Record Selection                      No
             ** End of Reports **
```

Figure 18-7 Report Set BASELINE

18.3.3 Creating the Performance Summary report

We typed line action `S` next to Summary within the Performance Reports category. The Performance Summary Report screen shown in Figure 18-8 was displayed.

```
File  Systems  Options  Help
--------------------------------------------------------------------------------
                     BASELINE - Performance Summary Report
Command ===>

System Selection:                        Report Output:
 APPLID . .          +                    DDname . . . . . . . . . SUMM0001
 Image  . .          +                    Print Lines per Page . .      (1-255)
 Group  . .          +

Report Format:
 Form . . .          +
 Title  . .



Processing Options:                           Reporting Options:
 Time Interval  . . . 00:01:00  (hh:mm:ss)       Exclude Totals

Selection Criteria:
 S  Performance
```

Figure 18-8 Performance Summary Report screen

We typed line action S next to the Performance selection criteria and pressed Enter. The Performance Select Statement screen in Figure 18-9 was displayed. We wanted to produce a report of our application transactions from a five minute interval in the middle of our TPNS test run. Therefore, we specified a selection condition to include only tasks in our object list VSAMFSHP that started on 09/24/2003 between the time 10:06:29.00 and 10:11:29.00 (Figure 18-9.)

```
File  Edit  Object Lists  Options  Help
--------------------------------------------------------------------------------
                 BASELINE - Performance Select Statement Row 1 of 9 More: >
Command ===>                                                Scroll ===> CSR

        Active  --------------- Report Interval ----------------
   Inc  Start   -------- From ---------  --------- To ----------
   Exc  Stop    MM/DD/YYYY  HH:MM:SS.TH  MM/DD/YYYY  HH:MM:SS.TH
   INC  START   09/24/2003  10:06:29.00  09/24/2003  10:11:29.00

--------------------------------------------------------------------------------

   Inc  Field            --- Value or Range ---   Object
/  Exc  Name +    Type   Value/From   To          List +
   INC  TRAN                                      VSAMFSHP

********************************** End of list ***********************************
```

Date and time selection condition

Include only those transactions in our Object List

Figure 18-9 Performance Select Statement screen

We entered both the time and transaction selection conditions on a single Performance Select Statement screen. Both conditions must be met before a record is selected for inclusion in the report (AND processing.) If we created two separate select statements for each condition, then a transaction would be included in the report if it met either one (OR processing.) We pressed F3 times to return to the Report Set screen.

18.3.4 Submitting the batch job

To submit our job, we typed the `RUN` line action next to the Summary Report and pressed Enter. The Run Report Set screen was displayed (Figure 18-10.)

```
  File  Systems  Options  Help
-------------------------------------------------------------------------
CPARSRUN                    Run Report Set BASELINE
Command ===>

Specify run Report Set options then press Enter to continue submit.

System Selection:
 CICS APPLID . .          +  Image . . SC66      +  Group . .          +
 DB2 SSID  . . .       +     Image . .           +  Group . .          +
 MQ SSID . . . .       +     Image . .           +  Group . .          +
 Logger  . . . .          +  Image . .           +  Group . .          +

    Override System Selections specified in Report Set

                                        ----- Report Interval ------
Missing SMF Files Option:                   MM/DD/YYYY  HH:MM:SS.TH
1  1. Issue error message               From
   2. Leave DSN unresolved in JCL       To
   3. Disregard offending reports

Enter "/" to select option
/  Edit JCL before submit
```

We leave CICS APPLID blank, and only specify Image SC66

We use the / line action to indicate that we want to edit the JCL before submitting the job

Figure 18-10 Run Report Set

We left CICS APPLID blank and only specified a CICS System Selection criteria of SC66. We entered a forward slash (/) next to Edit JCL before submit because we wanted the option to change the job name for each job. Keeping track of which job ran which report is easier when the job names are unique. We pressed Enter. Then we were placed into ISPF Edit mode for our batch JCL, shown in Figure 18-11.

```
  File  Edit  Edit_Settings  Menu  Utilities  Compilers  Test  Help
--------------------------------------------------------------------------------
ISREDDE3   CICSRS7.SC66.SPFTEMP1.CNTL                          Columns 00001 00080
Command ===> SUBMIT                                               Scroll ===> CSR
****** ********************************* Top of Data ***********************************
000001 //PERFSUMB  JOB ACCNT#,'CICSPA JOB',MSGLEVEL=(1,1),NOTIFY=&SYSUID
000002 /*JOBPARM SYSAFF=SC66
000003 //*****************************************************************
000004 //*                                                               *
000005 //* CICSPA V1R3 Report JCL
000006 //CICSPA   EXEC PGM=CPAMAIN
000007 //STEPLIB  DD DSN=CPA13.SCPALINK,DISP=SHR
000008 //SYSPRINT DD SYSOUT=*
000009 //* SMF Input Files
000010 //SMFIN001 DD DSN=CICSRS7.SMF110.TESTCASE,
000011 //            DISP=SHR
000012 //* External Work Data Sets
000013 //CPAXW001 DD DSN=&&CPAXW001,DISP=(NEW,DELETE),
000014 //             UNIT=SYSDA,SPACE=(CYL,(300,100))
000015 //* Sort Work Data Sets
000016 //CPASWK01 DD DSN=&&CPASWK01,DISP=(NEW,DELETE),
000017 //             UNIT=SYSDA,SPACE=(CYL,(300,100))
000018 //CPASWK02 DD DSN=&&CPASWK02,DISP=(NEW,DELETE),
000019 //             UNIT=SYSDA,SPACE=(CYL,(300,100))
000020 //CPASWK03 DD DSN=&&CPASWK03,DISP=(NEW,DELETE),
000021 //             UNIT=SYSDA,SPACE=(CYL,(300,100))
000022 //CPASWK04 DD DSN=&&CPASWK04,DISP=(NEW,DELETE),
000023 //             UNIT=SYSDA,SPACE=(CYL,(300,100))
000024 //SYSOUT   DD SYSOUT=*
000025 //* Command Input
000026 //SYSIN DD *
000027 * Report Set =BASELINE
000028 * Description=CICS PA Report Set
000029 * Reports for Image=SC66
000030 *            Description=System added by take-up
000031          CICSPA IN(SMFIN001),
000032                 NOAPPLID,
000033                 LINECNT(60),
000034                 FORMAT(':','/'),
000035              SUMMARY(OUTPUT(SUMM0001),
000036                 EXTERNAL(CPAXW001),
000037                 SELECT(PERFORMANCE(
000038                 INC(START(FROM(2003/09/24,10:06:29.00),
000039                           TO(2003/09/24,10:11:29.00))),
000040                 INC(TRAN(BR1,
000041                           CSMI,
000042                           HX1,
000043                           IX2,
000044                           IX8,
000045                           PX2,
000046                           PX3,
000047                           SX2,
000048                           SX4,
000049                           SX6)))))
000050 /*
```

We provide a meaningful job name

We verify the SMF data set is the one we want to use

We see the report options and selection criteria that we entered on the ISPF screens are turned into report selection control statements

Figure 18-11 Performance Summary Report JCL

After providing a unique job name, we entered SUBMIT on the command line and pressed Enter. When the job completed, it produced the output shown in Figure 18-12.

```
V1R3M0                                                CICS Performance Analyzer
                                                          Performance Summary
                                                 ____________________________________________
SUMM0001 Printed at 13:32:56  9/25/2003     Data from 10:06:29  9/24/2003 to 10:11:29  9/24/2003                    Page       1
```

Tran	#Tasks	Avg Response Time	Max Response Time	Avg Dispatch Time	Avg User CPU Time	Avg Suspend Time	Max Suspend Time	Avg DispWait Time	Avg FC Wait Time	Avg FCAMRq	Avg IR Wait Time	Avg SC24UHWM	Avg SC31UHWM
BR1	858	.0078	.0857	.0014	.0009	.0064	.0843	.0004	.0000	0	.0044	432	33232
CSMI	12486	.0199	.7749	.0013	.0009	.0186	.7719	.0009	.0055	19	.0127	0	3
HX1	610	.0156	.2118	.0032	.0022	.0125	.2061	.0007	.0000	0	.0087	432	92811
IX2	1303	.0257	.2844	.0057	.0043	.0199	.2771	.0023	.0000	0	.0169	432	92832
IX8	1721	.0333	.3270	.0054	.0040	.0279	.3084	.0025	.0000	0	.0246	432	92771
PX2	2163	.0261	.4537	.0062	.0045	.0198	.4317	.0025	.0000	0	.0168	432	92753
PX3	1962	.0367	.4654	.0087	.0066	.0280	.4490	.0041	.0000	0	.0250	432	92775
SX2	651	.0529	.8121	.0058	.0045	.0471	.8049	.0027	.0000	0	.0443	432	92763
SX4	412	.0249	.3801	.0049	.0036	.0200	.3538	.0020	.0000	0	.0146	432	92596
SX6	2201	.0186	.2507	.0036	.0024	.0150	.2452	.0011	.0000	0	.0118	432	92792

The average response times are in line with what we would expect for this application in the current environment

Figure 18-12 Performance Summary Report baseline

The average response times are in line with what we expected from this application in the current environment. Only those transactions that were part of our VSAMFSHP Object are reported, and only those that started during our specified time interval.

If this was a live production application, as part of our normal application monitoring procedures, we would want to produce this report daily and distribute it to our applications management. We would set it up to run through our production job scheduling package, where the input SMF data is updated automatically and the reports are sent to an online viewing facility such as IBM Content Manager OnDemand for iSeries®.

18.4 Application changes implemented

Next we simulated our applications development group implementing program changes. Programs and maps were updated and moved to production. The next time our regular Performance Summary report ran after the application changes are made, we saw the report in Figure 18-13.

The average response time for the transactions in our application remained within our expected ranges shown in Table 18-1 on page 387 with the exception of transaction BR1. Comparing the data from our current report in Figure 18-13 with that of our baseline report from Figure 18-12, we see a 571% increase in average response time for transaction BR1. Looking closer at transaction BR1, we also see a 588% increase in average CPU time, 581% increase in average suspend time, 1450% increase in average dispatch wait time, and 752% increase in average IR wait time.

```
V1R3M0                                          CICS Performance Analyzer
                                                    Performance Summary
                                                 ____________________________________
SUMM0001 Printed at 10:35:02  9/24/2003     Data from 10:16:43  9/24/2003 to 10:21:43  9/24/2003                    Page       1
```

Tran	#Tasks	Avg Response Time	Max Response Time	Avg Dispatch Time	Avg User CPU Time	Avg Suspend Time	Max Suspend Time	Avg DispWait Time	Avg FC Wait Time	Avg FCAMRq	Avg IR Wait Time	Avg SC24UHWM	Avg SC31UHWM
BR1	858	.0446	1.2273	.0074	.0053	.0372	1.2030	.0058	.0000	0	.0331	432	33232
CSMI	12895	.0247	1.2091	.0014	.0011	.0233	1.2053	.0010	.0054	23	.0175	0	3
HX1	609	.0160	.3028	.0032	.0022	.0128	.2956	.0008	.0000	0	.0088	432	92851
IX2	1302	.0270	.3864	.0058	.0043	.0212	.3799	.0030	.0000	0	.0177	432	92818
IX8	1719	.0350	.8573	.0057	.0040	.0293	.8500	.0026	.0000	0	.0262	432	92871
PX2	2158	.0266	.8969	.0061	.0045	.0205	.8865	.0035	.0000	0	.0171	432	92906
PX3	1961	.0388	.9365	.0089	.0067	.0299	.9265	.0052	.0000	0	.0264	432	92853
SX2	651	.0539	1.0864	.0059	.0045	.0480	1.0760	.0038	.0000	0	.0443	432	92814
SX4	414	.0246	.8808	.0052	.0036	.0194	.8743	.0022	.0000	0	.0152	432	92940
SX6	2200	.0193	.7659	.0036	.0025	.0158	.7599	.0013	.0000	0	.0124	432	92875
		Increased 571%		Increased 588%		Increased 581%		Increased 1450%			Increased 752%		

Figure 18-13 Performance Summary Report after application changes

We used Lotus 1-2-3 to create a chart of the average response times for the transactions in our application so we could visually compare the changes (Figure 18-14.)

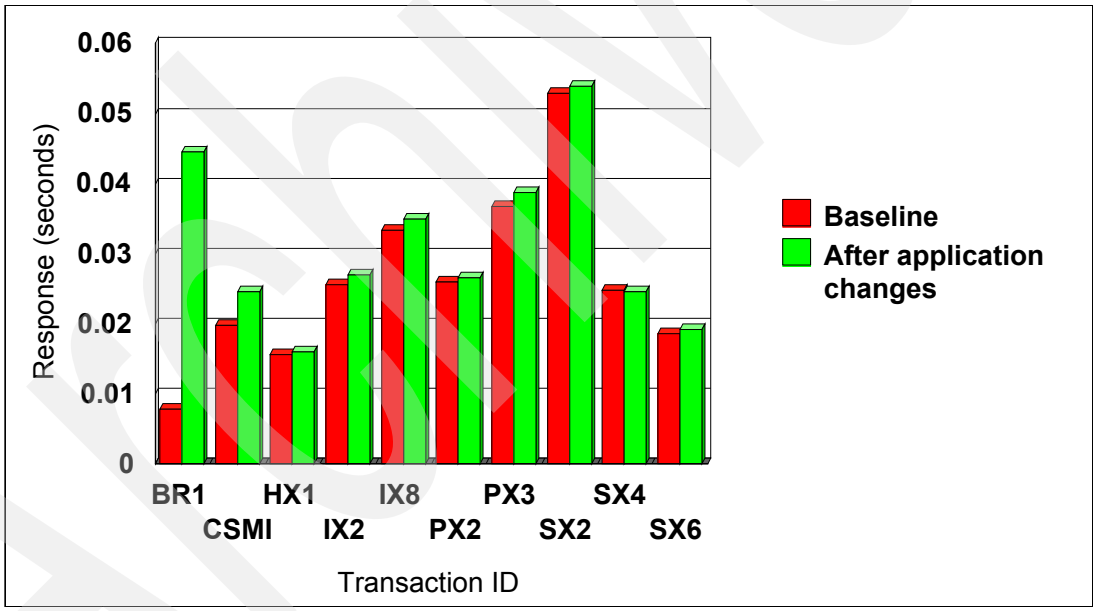

Figure 18-14 Average response time comparison chart

The chart shows the dramatic increase in average response time for transaction BR1. We decided to look closely at the rest of the averages for transaction BR1 (Figure 18-15.)

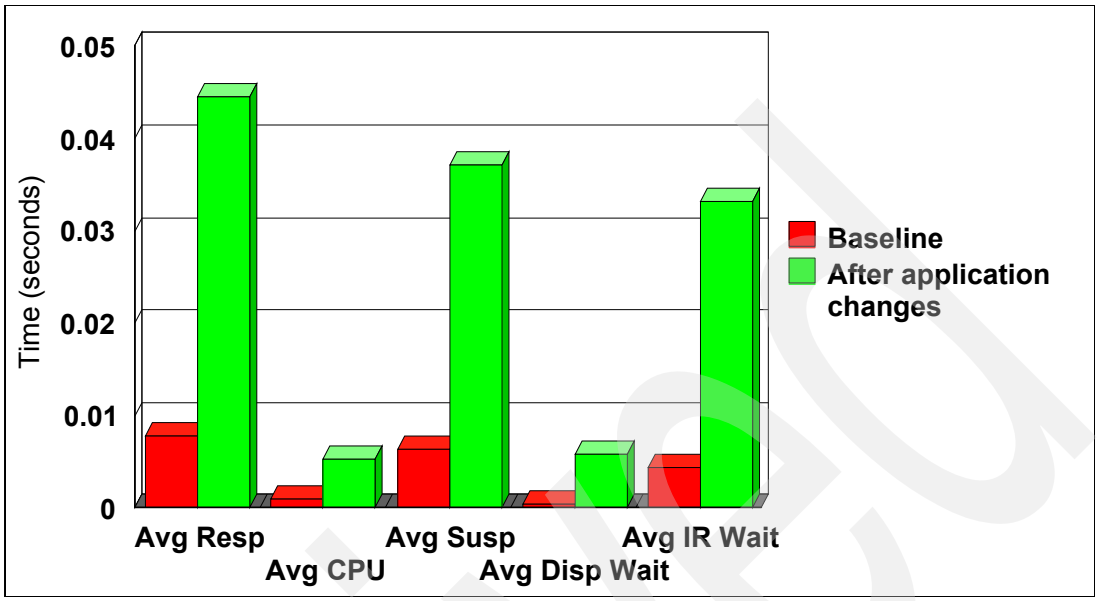

Figure 18-15 Transaction BR1 averages chart

In our five minute sampling, 858 BR1 transactions ran. If this sample was representative of the entire day, a small increase in CPU utilization per transaction could have a large impact, especially for customers who use charge-back systems.

Taking a proactive approach, we decided to investigate the cause of the increase. Because of the increase in the average suspend time and average IR wait time, we ran the Wait Analysis Report.

18.5 Producing the Wait Analysis report

To produce the Wait Analysis report, we selected option 2 from the CICS Performance Analyzer Primary Option Menu. Then we typed line action S next to the Report Set we created in Figure 18-7 on page 392 to we return to the Report Sets screen. We typed line action S next to the Wait Analysis report and pressed Enter. The Wait Analysis Report screen shown in Figure 18-16 is displayed.

We wanted to see the difference that the application changes made, so we produced two separate reports. One report shows a wait analysis before any application changes were made. The other report shows a wait analysis after the changes were made.

For the baseline report, we entered an appropriate title on the screen shown in Figure 18-16, typed line action S next to the Performance selection criteria option, and pressed Enter.

```
File  Systems  Options  Help
--------------------------------------------------------------------------------
                        BASELINE - Wait Analysis Report
Command ===>

System Selection:                        Report Output:
 APPLID . .           +                   DDname . . . . . . . . . WAIT0001
 Image  . .           +                   Print Lines per Page . .      (1-255)
 Group  . .           +

Order by:
 1 . .           +  2 . .           +  3 . .           +

Processing Options:
 Time Interval  . . .           (hh:mm:ss)

Report Format:
 Title  . . Wait Analysis Baseline


Selection Criteria:
 S  Performance
```

We enter a title and line action S

Figure 18-16 Wait Analysis Report screen

The Performance Select Statement screen in Figure 18-17 was displayed.

```
 File  Edit  Object Lists  Options  Help
 --------------------------------------------------------------------------------
                     BASELINE - Performance Select Statement Row 1 of 9 More: >
 Command ===>                                                  Scroll ===> CSR

          Active  --------------- Report Interval ----------------
    Inc   Start   -------- From ---------  --------- To ----------
    Exc   Stop    MM/DD/YYYY  HH:MM:SS.TH  MM/DD/YYYY  HH:MM:SS.TH
    INC   START   09/24/2003  10:06:29.00  09/24/2003  10:11:29.00

 --------------------------------------------------------------------------------

    Inc  Field             --- Value or Range ---   Object
 /  Exc  Name +    Type    Value/From   To          List +
    INC  TRAN                                       VSAMFSHP

********************************** End of list **********************************
```

Figure 18-17 Performance Select Statement screen

We entered the same selection criteria that we used to produce our baseline Performance Summary report in Figure 18-9 on page 393 and then pressed F3 three times to return to the Wait Analysis Reports screen (Figure 18-18.)

```
File  Filter  Edit  Systems  Options  Help
--------------------------------------------------------------------------------
                      BASELINE - Wait Analysis Reports          Row 1 from 2
Command ===>                                                 Scroll ===> CSR

Select to edit report options.

        ---- System Selection -----             Selection
/  Exc  APPLID +  Image +  Group +   Output     Criteria
                                    WAITBASE    YES
                                    WAITAFTR    YES
********************************* End of list *********************************
```

We enter line action R next to the first entry to repeat the selection criteria, and then type line action S next to the second one to specify different date and time criteria

We want our two reports written to separate DD statements, so we change the DDnames to identify which report is written to it

Figure 18-18 Wait Analysis Reports screen

We wanted to produce both reports with one job, so we entered line action R next to our first selection criteria and pressed Enter. We changed the output DDnames for each selection criteria to indicate which report is being written to it, and then typed line action S next to the second entry to change the date and time selection criteria.

The Wait Analysis Report screen was displayed for our second selection criteria entry (Figure 18-19). Then we changed the title appropriately, typed line action S next to the Performance selection criteria option, and pressed Enter.

```
File  Systems  Options  Help
--------------------------------------------------------------------------------
                      BASELINE - Wait Analysis Report
Command ===>

System Selection:                        Report Output:
 APPLID . .          +                    DDname . . . . . . . . . WAITAFTR
 Image  . .          +                    Print Lines per Page . .      (1-255)
 Group  . .          +

Order by:
 1 . .          +  2 . .          +  3 . .          +

Processing Options:
 Time Interval  . . . 00:01:00  (hh:mm:ss)

Report Format:
 Title  . . Wait Analysis After Application Changes


Selection Criteria:
 S  Performance  *
```

We enter a title and line action S

Figure 18-19 Wait Analysis Report screen

The Performance selection criteria screen was displayed. We typed line action `S` next to our criteria, and pressed Enter. The Performance Select Statement screen shown in Figure 18-20 was displayed.

```
File  Edit  Object Lists  Options  Help
--------------------------------------------------------------------------------
                    BASELINE - Performance Select Statement Row 1 of 9 More: >
Command ===>                                                  Scroll ===> CSR

         Active  --------------- Report Interval ----------------
   Inc   Start   -------- From ---------  --------- To ----------
   Exc   Stop    MM/DD/YYYY  HH:MM:SS.TH  MM/DD/YYYY  HH:MM:SS.TH
   INC   START   09/24/2003  10:16:43.00  09/24/2003  10:21:43.00

--------------------------------------------------------------------------------

   Inc  Field             --- Value or Range ---   Object
/  Exc  Name +    Type    Value/From   To          List +
   INC  TRAN                                       VSAMFSHP



********************************* End of list *********************************
```

We change the date and time interval fields to match the Performance Summary report, which we ran after the application changes were implemented

Figure 18-20 Performance Select Statement screen

After changing the time interval to match the Performance Summary report from Figure 18-13 on page 397, we pressed F3 four times to return to the Report Set screen, and entered line action `RUN` next to the Wait Analysis report. We entered a / next to Edit JCL before submit and pressed Enter. We entered ISPF edit mode for our batch JCL, as shown in Figure 18-21.

```
File  Edit  Edit_Settings  Menu  Utilities  Compilers  Test  Help
------------------------------------------------------------------------------------
EDIT       CICSRS7.SC66.SPFTEMP1.CNTL                          Columns 00001 00080
Command ===> SUBMIT                                               Scroll ===> CSR
****** ********************************* Top of Data **********************************
000001 //WAITANAL  JOB ACCNT#,'CICSPA JOB',MSGLEVEL=(1,1),NOTIFY=&SYSUID
000002 /*JOBPARM SYSAFF=SC66
000003 //*********************************************************************
000004 //*                                                                   *
000005 //*********************************************************************
000006 //* CICSPA V1R3 Report JCL
000007 //CICSPA   EXEC PGM=CPAMAIN
000008 //STEPLIB  DD DSN=CPA13.SCPALINK,DISP=SHR
000009 //SYSPRINT DD SYSOUT=*
000010 //* SMF Input Files
000011 //SMFIN001 DD DSN=CICSRS7.SMF110.TESTCASE,
000012 //            DISP=SHR
000013 //* Command Input
000014 //SYSIN DD *
- - - - - - - - - - - - - - - - - - - - - - -   42 Line(s) not Displayed
000057 /*
000058 //
''''''
****** ********************************* Bottom of Data *******************************
```

This SMF data set contains records for our baseline interval and our post-application change interval. It is the data set we created in 18.2.1, “Collecting SMF data” on page 388.

Figure 18-21 JCL for the Wait Analysis Report job

We provided a meaningful job name, entered `SUBMIT` on the command line, and pressed Enter. When the job completed, we had the two reports shown in Figure 18-22 and Figure 18-23. In the reports that were produced, all transactions from our application were reported. However, we only included transaction BR1 in these examples.

```
V1R3M0                                          CICS Performance Analyzer
                                                    Wait Analysis Report

WAITBASE Printed at 14:39:41  9/26/2003    Data from 10:06:29  9/24/2003 to 10:11:29  9/24/2003                    Page       1
Wait Analysis Baseline

-------------------------------------------------------------------------------------------------------------------------------
Tran=BR1
  Summary Data                                        -------- Time ---------    ------ Count ------    ------ Ratio ------
                                                            Total     Average       Total    Average
    # Tasks                                                                           858
    Response Time                                          6.6672      0.0078
    Dispatch Time                                          1.1872      0.0014        6002        7.0     17.8% of Response
1   CPU Time                                               0.8034      0.0009        6002        7.0     67.7% of Dispatch
    Suspend Wait Time                                      5.4727      0.0064        6002        7.0     82.1% of Response
    Dispatch Wait Time                                 3   0.3371      0.0004        5144        6.0      6.2% of Suspend
    Resource Manager Interface (RMI) elapsed time          0.0000      0.0000           0        0.0      0.0% of Response
    Resource Manager Interface (RMI) suspend time          0.0000      0.0000           0        0.0      0.0% of Suspend

  Suspend Detail                                      ------------------- Suspend Time ------------------- ----- Count -----
                                                            Total     Average    %age  Graph                  Total  Average
2   IRIOWTT  MRO link wait time                        4   3.7627      0.0044   68.8% |*************          5145      6.0
    DSPDELAY First dispatch wait time                      1.7099      0.0020   31.2% |******                  858      1.0

-------------------------------------------------------------------------------------------------------------------------------
```

Figure 18-22 Wait Analysis Report before application changes

```
V1R3M0                                          CICS Performance Analyzer
                                                    Wait Analysis Report

WAITAFTR Printed at 14:47:06  9/26/2003    Data from 10:16:43  9/24/2003 to 10:21:43  9/24/2003                    Page       1
Wait Analysis After Application Changes

-------------------------------------------------------------------------------------------------------------------------------
Tran=BR1
  Summary Data                                        -------- Time ---------    ------ Count ------    ------ Ratio ------
                                                            Total     Average       Total    Average
    # Tasks                                                                           858
    Response Time                                         38.2913      0.0446
    Dispatch Time                                          6.3530      0.0074       67703       78.9     16.6% of Response
1   CPU Time                                               4.5703      0.0053       67703       78.9     71.9% of Dispatch
    Suspend Wait Time                                     31.9313      0.0372       67703       78.9     83.4% of Response
    Dispatch Wait Time                                 3   4.9502      0.0058       66845       77.9     15.5% of Suspend
    Resource Manager Interface (RMI) elapsed time          0.0000      0.0000           0        0.0      0.0% of Response
    Resource Manager Interface (RMI) suspend time          0.0000      0.0000           0        0.0      0.0% of Suspend

  Suspend Detail                                      ------------------- Suspend Time ------------------- ----- Count -----
                                                            Total     Average    %age  Graph                  Total  Average
2   IRIOWTT  MRO link wait time                        4  28.4143      0.0331   89.0% |****************       66853     77.9
    DSPDELAY First dispatch wait time                      3.5170      0.0041   11.0% |**                     858      1.0

-------------------------------------------------------------------------------------------------------------------------------
```

Figure 18-23 Wait Analysis Report after application changes

The Wait Analysis report has two sections:

- The first section **1** provides a summary of common performance metrics.
- The second section **2** provides a detailed breakdown of suspend time by component.

We compared the Dispatch Wait Time **3** in the Summary Data section. This figure increased 1450%. It gives us the elapsed time for which the user task waited for redispatch by the CICS dispatcher domain. It is the aggregate of the wait times between each wait event completion and the user task being redispatched by the CICS dispatcher domain.

In the Count Average column, before the application changes were made, each BR1 had an average of 6.0 wait events. After the application changes, each BR1 had an average of 77.8 wait events. Each time a task enters a wait state, it gives up control and must be redispatched by CICS after the wait event completes. This count tells us that something in the application is making the task give up control almost 13 times more often than it used to.

Next we looked at the Suspend Detail section 2. This section details the components of the Suspend Wait Time reported in the Summary Data section 1. The Suspend Detail includes one report line for every Suspend component clock with a non-zero value. The components are reported in descending wait time order. In both reports, IRIOWTT 4 is the wait time that contributes the most to the total task suspend time. However, comparing the average IRIOWTT time from both reports, we see the 752% increase that was shown in the Performance Summary report we produced earlier (Figure 18-13.)

The Wait Analysis report verified that the MRO link wait time is the main contributor to the increase in the total BR1 suspend wait time. It also tells us that each BR1 transaction is incurring approximately 13 times more MRO link wait events that it used to.

Now we need to determine what is causing that increase in MRO link wait events, so we turn to the Cross-System Work report.

18.6 Producing the Cross-System Work report

This section explains how we used the Cross-System Work report to uncover the details of the increased MRO activity for transaction BR1.

From the CICS Performance Analyzer Primary Option Menu, we selected option 2. Then we typed line action S next to the Report Set we created in Figure 18-7 on page 392 to return to the Report Sets screen. We typed line action S next to the Cross-System Work report and pressed Enter. The Cross-System Work Report screen shown in Figure 18-24 was displayed.

```
File  Systems  Options  Help
--------------------------------------------------------------------------------
                    BASELINE - Cross-System Work Report
Command ===>

System Selection:                          Report Output:
 APPLID . .          +                      DDname . . . . . . . . . CROSBASE
 Image  . .          +                      Print Lines per Page . .     (1-255)
 Group  . .          +

Processing Options:
 1  1. UOWs with more than one record
    2. UOWs with a single record
    3. All UOWs

Report Format:
 Form . . .          +
 Title  . . Cross-System Baseline


Selection Criteria:
 S  Performance
```

We changed the DDname to be meaningful

We use Processing Option 1

We enter a title and line action S

Figure 18-24 Cross-System Work Report screen

Because we again produce two reports with one job, we changed the DDname to something meaningful, selected Processing option `1`, provided a report title, and typed line action `S` next to the Performance selection criteria option.

As we did for the Wait Analysis report, we created two sets of Performance selection criteria, each going to a separate DDname. The first set of selection criteria was for the time range before the application changes were made. The second set was for the time range after the application changes were made. When we completed entering our selection criteria, we pressed F3 repeatedly until we reached the Report Set screen. Then we entered the `RUN` line action on the Cross-System Work report to submit the job.

When our job was complete, we had the two reports shown in Figure 18-25 and Figure 18-26.

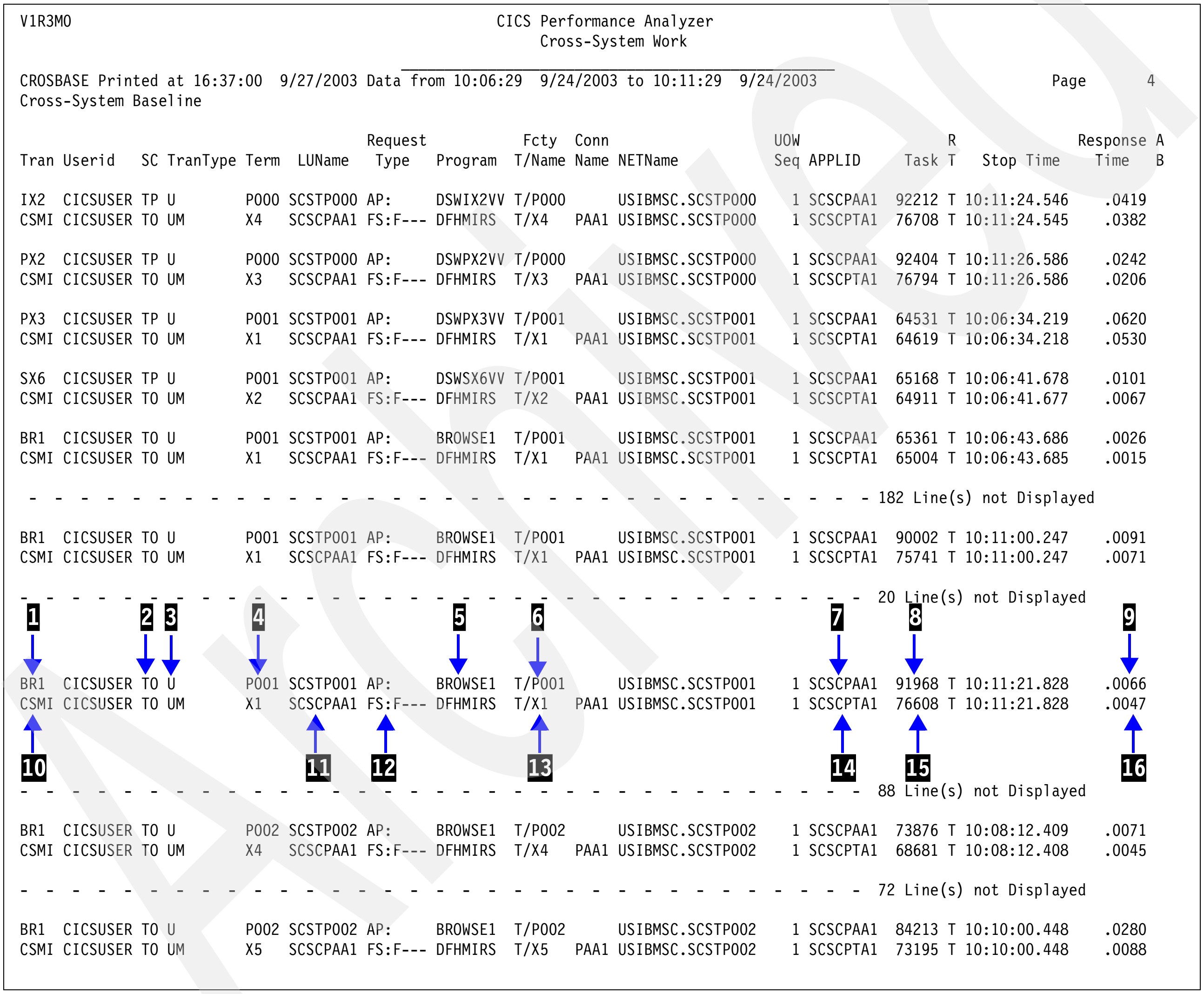

```
V1R3M0                                              CICS Performance Analyzer
                                                        Cross-System Work
                                            ________________________________________
CROSBASE Printed at 16:37:00  9/27/2003 Data from 10:06:29  9/24/2003 to 10:11:29  9/24/2003                 Page       4
Cross-System Baseline

                                   Request          Fcty  Conn                   UOW                  R              Response A
Tran Userid   SC TranType Term  LUName   Type   Program  T/Name Name NETName          Seq APPLID     Task T   Stop Time     Time   B

IX2  CICSUSER TP U        P000 SCSTP000 AP:     DSWIX2VV T/P000      USIBMSC.SCSTP000   1 SCSCPAA1  92212 T 10:11:24.546   .0419
CSMI CICSUSER TO UM       X4   SCSCPAA1 FS:F--- DFHMIRS  T/X4   PAA1 USIBMSC.SCSTP000   1 SCSCPTA1  76708 T 10:11:24.545   .0382

PX2  CICSUSER TP U        P000 SCSTP000 AP:     DSWPX2VV T/P000      USIBMSC.SCSTP000   1 SCSCPAA1  92404 T 10:11:26.586   .0242
CSMI CICSUSER TO UM       X3   SCSCPAA1 FS:F--- DFHMIRS  T/X3   PAA1 USIBMSC.SCSTP000   1 SCSCPTA1  76794 T 10:11:26.586   .0206

PX3  CICSUSER TP U        P001 SCSTP001 AP:     DSWPX3VV T/P001      USIBMSC.SCSTP001   1 SCSCPAA1  64531 T 10:06:34.219   .0620
CSMI CICSUSER TO UM       X1   SCSCPAA1 FS:F--- DFHMIRS  T/X1   PAA1 USIBMSC.SCSTP001   1 SCSCPTA1  64619 T 10:06:34.218   .0530

SX6  CICSUSER TP U        P001 SCSTP001 AP:     DSWSX6VV T/P001      USIBMSC.SCSTP001   1 SCSCPAA1  65168 T 10:06:41.678   .0101
CSMI CICSUSER TO UM       X2   SCSCPAA1 FS:F--- DFHMIRS  T/X2   PAA1 USIBMSC.SCSTP001   1 SCSCPTA1  64911 T 10:06:41.677   .0067

BR1  CICSUSER TO U        P001 SCSTP001 AP:     BROWSE1  T/P001      USIBMSC.SCSTP001   1 SCSCPAA1  65361 T 10:06:43.686   .0026
CSMI CICSUSER TO UM       X1   SCSCPAA1 FS:F--- DFHMIRS  T/X1   PAA1 USIBMSC.SCSTP001   1 SCSCPTA1  65004 T 10:06:43.685   .0015

 - - - - - - - - - - - - - - - - - - - - - - - - - - - - - - - - 182 Line(s) not Displayed

BR1  CICSUSER TO U        P001 SCSTP001 AP:     BROWSE1  T/P001      USIBMSC.SCSTP001   1 SCSCPAA1  90002 T 10:11:00.247   .0091
CSMI CICSUSER TO UM       X1   SCSCPAA1 FS:F--- DFHMIRS  T/X1   PAA1 USIBMSC.SCSTP001   1 SCSCPTA1  75741 T 10:11:00.247   .0071

- - - - - - - - - - - - - - - - - - - - - - - - - - - - - - - -  20 Line(s) not Displayed

BR1  CICSUSER TO U        P001 SCSTP001 AP:     BROWSE1  T/P001      USIBMSC.SCSTP001   1 SCSCPAA1  91968 T 10:11:21.828   .0066
CSMI CICSUSER TO UM       X1   SCSCPAA1 FS:F--- DFHMIRS  T/X1   PAA1 USIBMSC.SCSTP001   1 SCSCPTA1  76608 T 10:11:21.828   .0047

- - - - - - - - - - - - - - - - - - - - - - - - - - - - - - - -  88 Line(s) not Displayed

BR1  CICSUSER TO U        P002 SCSTP002 AP:     BROWSE1  T/P002      USIBMSC.SCSTP002   1 SCSCPAA1  73876 T 10:08:12.409   .0071
CSMI CICSUSER TO UM       X4   SCSCPAA1 FS:F--- DFHMIRS  T/X4   PAA1 USIBMSC.SCSTP002   1 SCSCPTA1  68681 T 10:08:12.408   .0045

- - - - - - - - - - - - - - - - - - - - - - - - - - - - - - - -  72 Line(s) not Displayed

BR1  CICSUSER TO U        P002 SCSTP002 AP:     BROWSE1  T/P002      USIBMSC.SCSTP002   1 SCSCPAA1  84213 T 10:10:00.448   .0280
CSMI CICSUSER TO UM       X5   SCSCPAA1 FS:F--- DFHMIRS  T/X5   PAA1 USIBMSC.SCSTP002   1 SCSCPTA1  73195 T 10:10:00.448   .0088
```

Figure 18-25 Cross-System Work baseline report

In Figure 18-25, you see the Cross-System Work report before any application changes were made. Each line is printed from a single CMF performance class record. Records that are part of the same network unit of work are printed sequentially in groups separated by blank lines. All the transactions that are part of our VSAMFSHP object are reported. For transaction BR1, you see that it is always paired with one CSMI mirror task. We took a single unit of work and described the output.

Transaction BR1 1 was attached by terminal input 2. It is a user transaction 3 being entered at termid P001 4. The initial program is BROWSE1 5. The task's principal facility is a terminal by name of P001 6. The task ran on a CICS region with APPLID of SCSCPAA1 7. It had a task ID of 91968 8, and its response time was .0066 seconds 9. While it was running, the application issued EXEC CICS commands to access files. The files were not in the same CICS region, so CICS generated a function shipping request for file control 12. The function shipping requests were sent over from CICS region SCSCPAA1 11 to a CICS File Owning Region (FOR) with APPLID SCSCPTA1 14 to be executed. In this FOR, the mirror task transaction CSMI 10 ran on session X1 13 as task number 76608 15, and the response time of these function shipping requests were .0047 seconds 16.

```
V1R3M0                                                CICS Performance Analyzer
                                                          Cross-System Work
                                                 ____________________________________________
CROSAFTR Printed at 16:37:00  9/27/2003 Data from 10:16:43  9/24/2003 to 10:21:43  9/24/2003                          Page       1
Cross-System After Application Changes

                                      Request           Fcty  Conn                    UOW                 R              Response A
Tran Userid   SC TranType Term  LUName   Type   Program  T/Name Name NETName            Seq APPLID     Task T   Stop Time    Time   B

IX8  CICSUSER TP U        P000 SCSTP000 AP:     DSWIX8VV T/P000      USIBMSC.SCSTP000    1 SCSCPAA1   4599 T 10:16:46.173    .0228
CSMI CICSUSER TO UM       X1   SCSCPAA1 FS:F--- DFHMIRS  T/X1   PAA1 USIBMSC.SCSTP000    1 SCSCPTA1  81777 T 10:16:46.172    .0198

SX2  CICSUSER TP U        P000 SCSTP000 AP:     DSWSX2VV T/P000      USIBMSC.SCSTP000    1 SCSCPAA1   4811 T 10:16:48.617    .0396
CSMI CICSUSER TO UM       X2   SCSCPAA1 FS:F--- DFHMIRS  T/X2   PAA1 USIBMSC.SCSTP000    1 SCSCPTA1  81869 T 10:16:48.617    .0348

SX6  CICSUSER TP U        P000 SCSTP000 AP:     DSWSX6VV T/P000      USIBMSC.SCSTP000    1 SCSCPAA1   5190 T 10:16:53.056    .0140
CSMI CICSUSER TO UM       X2   SCSCPAA1 FS:F--- DFHMIRS  T/X2   PAA1 USIBMSC.SCSTP000    1 SCSCPTA1  82035 T 10:16:53.055    .0096

BR1  CICSUSER TO U        P000 SCSTP000 AP:     BROWSE1  T/P000      USIBMSC.SCSTP000    1 SCSCPAA1   5378 T 10:16:55.068    .0051 ] 1
CSMI CICSUSER TO UM       X1   SCSCPAA1 FS:F--- DFHMIRS  T/X1   PAA1 USIBMSC.SCSTP000    1 SCSCPTA1  82125 T 10:16:55.067    .0029 ]

BR1  CICSUSER TO U        P000 SCSTP000 AP:     BROWSE1  T/P000      USIBMSC.SCSTP000    1 SCSCPAA1   5410 T 10:16:55.480    .0094
CSMI CICSUSER TO UM       X2   SCSCPAA1 FS:F--- DFHMIRS  T/X2   PAA1 USIBMSC.SCSTP000    1 SCSCPTA1  82144 T 10:16:55.480    .0068

-  -  -  -  -  -  -  -  -  -  -  -  -  -  -  -  -  -  -  -  -  -  -  -  -  -  -  -  -  -  -  -  - 127 Line(s) not Displayed

BR1  CICSUSER TO U        P000 SCSTP000 AP:     BROWSE1  T/P000      USIBMSC.SCSTP000    1 SCSCPAA1  23603 T 10:20:05.592    .0396
CSMI CICSUSER TO UM       X1   SCSCPAA1 FS:F--- DFHMIRS  T/X1   PAA1 USIBMSC.SCSTP000    1 SCSCPTA1  90062 T 10:20:05.592    .0390
CSMI CICSUSER TO UM       <AY1 SCSCPTA1 FS:-I-- DFHMIRS  T/<AY1 PTA1 USIBMSC.SCSTP000    1 SCSCPJA7    936 T 10:20:05.591    .0380

-  -  -  -  -  -  -  -  -  -  -  -  -  -  -  -  -  -  -  -  -  -  -  -  -  -  -  -  -  -  -  -  -   8 Line(s) not Displayed

BR1  CICSUSER TO U        P000 SCSTP000 AP:     BROWSE1  T/P000      USIBMSC.SCSTP000    1 SCSCPAA1  25368 T 10:20:23.683    .0023
CSMI CICSUSER TO UM       X1   SCSCPAA1 FS:F--- DFHMIRS  T/X1   PAA1 USIBMSC.SCSTP000    1 SCSCPTA1  90837 T 10:20:23.682    .0014

-  -  -  -  -  -  -  -  -  -  -  -  -  -  -  -  -  -  -  -  -  -  -  -  -  -  -  -  -  -  -  -  -  33 Line(s) not Displayed

BR1  CICSUSER TO U        P000 SCSTP000 AP:     BROWSE1  T/P000      USIBMSC.SCSTP000    1 SCSCPAA1  32717 T 10:21:41.648    .0345
CSMI CICSUSER TO UM       X1   SCSCPAA1 FS:F--- DFHMIRS  T/X1   PAA1 USIBMSC.SCSTP000    1 SCSCPTA1  94057 T 10:21:41.648    .0336
CSMI CICSUSER TO UM       <AY1 SCSCPTA1 FS:-I-- DFHMIRS  T/<AY1 PTA1 USIBMSC.SCSTP000    1 SCSCPJA7   1212 T 10:21:41.647    .0327

BR1  CICSUSER TO U        P001 SCSTP001 AP:     BROWSE1  T/P001      USIBMSC.SCSTP001    1 SCSCPAA1   4385 T 10:16:44.273    .1644 ]
CSMI CICSUSER TO UM       X3   SCSCPAA1 FS:F--- DFHMIRS  T/X3   PAA1 USIBMSC.SCSTP001    1 SCSCPTA1  81677 T 10:16:44.273    .1612 ]  2
CSMI CICSUSER TO UM       <AY1 SCSCPTA1 FS:-I-- DFHMIRS  T/<AY1 PTA1 USIBMSC.SCSTP001    1 SCSCPJA7    379 T 10:16:44.273    .1601 ]
 ↑                         ↑            ↑            ↑                                    ↑          ↑
 3                         4            5            6                                    7          8
-  -  -  -  -  -  -  -  -  -  -  -  -  -  -  -  -  -  -  -  -  -  -  -  -  -  -  -  -  -  -  -  - 150 Line(s) not Displayed

BR1  CICSUSER TO U        P001 SCSTP001 AP:     BROWSE1  T/P001      USIBMSC.SCSTP001    1 SCSCPAA1  26432 T 10:20:33.884    .0049
CSMI CICSUSER TO UM       X1   SCSCPAA1 FS:F--- DFHMIRS  T/X1   PAA1 USIBMSC.SCSTP001    1 SCSCPTA1  91296 T 10:20:33.883    .0026

-  -  -  -  -  -  -  -  -  -  -  -  -  -  -  -  -  -  -  -  -  -  -  -  -  -  -  -  -  -  -  -  - 143 Line(s) not Displayed

BR1  CICSUSER TO U        P002 SCSTP002 AP:     BROWSE1  T/P002      USIBMSC.SCSTP002    1 SCSCPAA1  11351 T 10:17:57.549    .0481
CSMI CICSUSER TO UM       X2   SCSCPAA1 FS:F--- DFHMIRS  T/X2   PAA1 USIBMSC.SCSTP002    1 SCSCPTA1  84739 T 10:17:57.549    .0471
CSMI CICSUSER TO UM       <AY1 SCSCPTA1 FS:-I-- DFHMIRS  T/<AY1 PTA1 USIBMSC.SCSTP002    1 SCSCPJA7    589 T 10:17:57.549    .0460
```

Figure 18-26 Cross-System Work report after application changes

Now let's look at the Cross-System Work report in Figure 18-26 after the application changes were made. You see the same kind of pairing of a single BR1 transaction and a single CSMI

tasks 1. However, for many units of work, you see multiple CSMI tasks 2. In addition, when there are multiple CSMI tasks associated with a BR1 transaction unit of work, the response times are longer. The interpretation of the data from the BR1 entry and the first CSMI entry shown in area 2 of the report in Figure 18-26 is the same as in Figure 18-25 on page 404 so we only discuss the second CSMI here.

The second CSMI task in area 2 shows that while the application was running, it issued EXEC CICS commands, which caused Interval Control function shipping requests 5 to be sent from region SCSCPTA1 4 to SCSCPJA7 7. The Interval Control requests ran the CSMI mirror transaction 3 in SCSCPJA7 on session <AY1 6 as task number 379 8.

In the Cross-System Work report from after the application changes, we've seen that, if a unit of work has only a line for the BR1 transaction and a single line for a CSMI transaction, the response times are approximately the same as they were before application changes were made. It is only those units of work where there are multiple CSMI mirror tasks where the function shipping activity takes longer.

Now we want to investigate the function shipping activity in more detail for these tasks.

18.7 Producing the File Usage detailed list report

This section uses the File Usage detailed list report to investigate the type of file access changes that were introduced to our application.

We take a closer look at the function shipped file control requests issued during the BR1 transaction's unit of work. The Cross-System Work reports we produced show us that the file access is performed for our BR1 transaction by the CSMI mirror task in the FOR. The File Usage detailed list report can provide a more granular analysis of file control requests, telling us both which files are accessed as well as what types of access is occurring.

We started by collecting the task numbers for several CSMI tasks appearing in our Cross-System Work report from Figure 18-26 on page 405. We wanted a representative sample from the BR1 units of work that have one CSMI task associated with them, as well as several with multiple CSMI tasks associated with them. We created an Object containing task numbers for CSMI tasks that we want to look at. We did this, because producing the File Usage detailed list report without any selection criteria would produce a much larger report than we wanted to work with. We named our Object List CSMIFSHP, and filled it with the transaction numbers shown in Table 18-2.

Table 18-2 Task numbers for CSMI transactions

Single CSMI in BR1 unit of work	Multiple CSMI in BR1 unit of work
82125	81677
82144	83365
82910	84105
84257	84482
87848	84739
89126	86766
90837	90062
91296	90824
92138	92783
92594	94057

We returned to the Report Set screen and typed line action `S` next to Transaction Resource Usage List report. The screen shown in Figure 18-27 is displayed.

```
File  Systems  Options  Help
--------------------------------------------------------------------------------
                 BASELINE - Transaction Resource Usage Report
Command ===>

System Selection:                        Report Output:
 APPLID . .           +                   DDname . . . . . . . . . RESU0001
 Image  . .           +                   Print Lines per Page . .      (1-255)
 Group  . .           +

Detailed List Reports Required:
 /  File Usage
    Temporary Storage

Report Format:
 Title  . . Selected CSMI File Uses Report


Selection Criteria:
 S  Performance
```

We select only File Usage

We enter a title and line action S

Figure 18-27 Transaction Resource Usage Report screen

We selected only the File Usage detailed report, provided a meaningful title, typed line action `S` next to Performance selection criteria, and pressed Enter. The screen in Figure 18-28 is displayed.

```
File  Edit  Object Lists  Options  Help
--------------------------------------------------------------------------------
                    BASELINE - Performance Select Statement Row 1 of 9 More: >
Command ===>                                                Scroll ===> CSR

         Active  --------------- Report Interval ----------------
   Inc   Start   -------- From ---------  --------- To ----------
   Exc   Stop    MM/DD/YYYY  HH:MM:SS.TH  MM/DD/YYYY  HH:MM:SS.TH


--------------------------------------------------------------------------------

   Inc  Field            --- Value or Range ---   Object
/  Exc  Name +    Type    Value/From   To          List +
   INC  TASKNO                                     CSMIFSHP
```

We only want specific task numbers

Figure 18-28 Performance Select Statement screen

We left the date and time fields in the Report Interval section blank, and entered an `INC` selection criteria for task numbers that are in the CSMIFSHP object list that we created. We pressed F3 repeatedly to return to the Report Set screen. Then we entered line action `RUN` to submit the job. When the job completed, we received the report shown in Figure 18-29.

```
V1R3M0                                          CICS Performance Analyzer
                                              Transaction Resource Usage List
                                         ____________________________________________
 RESU0001 Printed at  8:54:48  9/30/2003    Data from 10:16:44  9/24/2003                                          Page       1
 Selected CSMI File Uses Report

                                          Request          Fcty  Conn                                   UOW R              Response
 Tran  Userid  SC TranType Term   LUName   Type   Program  T/Name Name      NETName       APPLID    Task Seq T   Stop Time    Time
 ---- -------- -- -------- ----  -------- ------- -------- ------ ---- ---------------- --------   ---- --- - ------------ --------
 CSMI CICSUSER TO UM       X3    SCSCPAA1 FS:F--- DFHMIRS  T/X3   PAA1 USIBMSC.SCSTP001  SCSCPTA1  81677   1 T 10:16:44.273    .1612

                                 ********************** FC Calls ********************** ******* I/O Waits ********  AccMeth
       File                        Get      Put     Browse    Add     Delete   Total     File     RLS      CFDT   Requests
      --------                   -------- -------- -------- -------- -------- -------- -------- -------- -------- --------
      VENDORX             Elapse    .0000    .0000    .0018    .0000    .0000    .0018    .0000    .0000    .0000
                          Count        0        0      151        0        0      152        0        0        0      153

 ---- -------- -- -------- ----  -------- ------- -------- ------ ---- ---------------- --------   ---- --- - ------------ --------
 CSMI CICSUSER TO UM       X1    SCSCPAA1 FS:F--- DFHMIRS  T/X1   PAA1 USIBMSC.SCSTP000  SCSCPTA1  82125   1 T 10:16:55.067    .0029

                                 ********************** FC Calls ********************** ******* I/O Waits ********  AccMeth
       File                        Get      Put     Browse    Add     Delete   Total     File     RLS      CFDT   Requests
      --------                   -------- -------- -------- -------- -------- -------- -------- -------- -------- --------
      VENDORX             Elapse    .0000    .0000    .0000    .0000    .0000    .0001    .0000    .0000    .0000
                          Count        0        0        4        0        0        5        0        0        0        6

 ---- -------- -- -------- ----  -------- ------- -------- ------ ---- ---------------- --------   ---- --- - ------------ --------
 CSMI CICSUSER TO UM       X2    SCSCPAA1 FS:F--- DFHMIRS  T/X2   PAA1 USIBMSC.SCSTP000  SCSCPTA1  82144   1 T 10:16:55.480    .0068

                                 ********************** FC Calls ********************** ******* I/O Waits ********  AccMeth
       File                        Get      Put     Browse    Add     Delete   Total     File     RLS      CFDT   Requests
      --------                   -------- -------- -------- -------- -------- -------- -------- -------- -------- --------
      VENDORX             Elapse    .0000    .0000    .0000    .0000    .0000    .0001    .0000    .0000    .0000
                          Count        0        0        4        0        0        5        0        0        0        6

 ---- -------- -- -------- ----  -------- ------- -------- ------ ---- ---------------- --------   ---- --- - ------------ --------
 CSMI CICSUSER TO UM       X1    SCSCPAA1 FS:F--- DFHMIRS  T/X1   PAA1 USIBMSC.SCSTP002  SCSCPTA1  82910   1 T 10:17:14.294    .0046

                                 ********************** FC Calls ********************** ******* I/O Waits ********  AccMeth
       File                        Get      Put     Browse    Add     Delete   Total     File     RLS      CFDT   Requests      1
      --------                   -------- -------- -------- -------- -------- -------- -------- -------- -------- --------
      VENDORX             Elapse    .0000    .0000    .0000    .0000    .0000    .0001    .0000    .0000    .0000
                          Count        0        0        4        0        0        5        0        0        0        6
                                                      3

 ---- -------- -- -------- ----  -------- ------- -------- ------ ---- ---------------- --------   ---- --- - ------------ --------
 CSMI CICSUSER TO UM       X1    SCSCPAA1 FS:F--- DFHMIRS  T/X1   PAA1 USIBMSC.SCSTP004  SCSCPTA1  83365   1 T 10:17:25.365    .0846

                                 ********************** FC Calls ********************** ******* I/O Waits ********  AccMeth
       File                        Get      Put     Browse    Add     Delete   Total     File     RLS      CFDT   Requests      2
      --------                   -------- -------- -------- -------- -------- -------- -------- -------- -------- --------
      VENDORX             Elapse    .0000    .0000    .0013    .0000    .0000    .0013    .0000    .0000    .0000
                          Count        0        0      151        0        0      152        0        0        0      153
                                                      4

 ---- -------- -- -------- ----  -------- ------- -------- ------ ---- ---------------- --------   ---- --- - ------------ --------
 CSMI CICSUSER TO UM       X1    SCSCPAA1 FS:F--- DFHMIRS  T/X1   PAA1 USIBMSC.SCSTP005  SCSCPTA1  84105   1 T 10:17:42.664    .0548

                                 ********************** FC Calls ********************** ******* I/O Waits ********  AccMeth
       File                        Get      Put     Browse    Add     Delete   Total     File     RLS      CFDT   Requests
      --------                   -------- -------- -------- -------- -------- -------- -------- -------- -------- --------
      VENDORX             Elapse    .0000    .0000    .0014    .0000    .0000    .0014    .0000    .0000    .0000
                          Count        0        0      151        0        0      152        0        0        0      153

 ---- -------- -- -------- ----  -------- ------- -------- ------ ---- ---------------- --------   ---- --- - ------------ --------
 CSMI CICSUSER TO UM       X1    SCSCPAA1 FS:F--- DFHMIRS  T/X1   PAA1 USIBMSC.SCSTP001  SCSCPTA1  84257   1 T 10:17:46.195    .0046

                                 ********************** FC Calls ********************** ******* I/O Waits ********  AccMeth
       File                        Get      Put     Browse    Add     Delete   Total     File     RLS      CFDT   Requests
      --------                   -------- -------- -------- -------- -------- -------- -------- -------- -------- --------
      VENDORX             Elapse    .0000    .0000    .0000    .0000    .0000    .0001    .0000    .0000    .0000
                          Count        0        0        4        0        0        5        0        0        0        6

-  -  -  -  -  -  -  -  -  -  -  -  -  -  -  -  -  -  -  -  -  -  -  -  -  -  -  -  -  -  -  - 177 Line(s) not Displayed
```

Figure 18-29 File Use Detail Report for selected CSMI transactions

Report area 1 shows the details for task number 82910, a CSMI for a BR1 task that had only one CSMI task in the unit of work. Area 2 shows the details for task number 83365, a CSMI

for a BR1 task that had multiple CSMI tasks in the unit of work. Comparing the rest of the transactions in the report, these two seem to be representative of the pattern of file use.

By comparing the file access patterns, you quickly see that both tasks are browsing file VENDORX. Our tasks with the higher response time are making 151 browse calls to file control 4, while our quickly responding tasks only make four 3.

This file is in an FOR and is remote from where the application program making the request is running. The new changes to program BROWSE1 are causing many more browse requests on the VENDORX file, and these requests are all being function shipped from SCSCPAA1 to SCSCPTA1. Function shipping browse requests causes two flows in the network for each record requested. For large numbers of calls, the overhead can be unacceptably high.

18.8 The second CSMI mirror task

Next we investigate the reason for the second CSMI mirror task associated with these longer running BR1 transactions. We already know that the additional function shipping for browse requests on the VENDORX file are responsible for the longer IRIOWTT suspend. But we wanted to see more details about the CSMI task that is involved in interval control.

To do so, we ran a list report using one of the supplied sample report forms. From the CICS PA Primary Option Menu, we selected option `3` to go to the Report Forms screen. From there, we could either enter the `SAMPLES` command and press Enter or use the `SAMPLES` action bar choice and choose option `1` from the list. The Sample Report Forms screen in Figure 18-30 is displayed.

```
-----------------------------------------------------------------
                    Sample Report Forms    Row 30 to 45 of 90
 Command ===>                              Scroll ===> CSR

 Select one or more Sample Report Forms then press EXIT.

      Name    Type               Description
    FDSPLST   LIST     First Dispatch Delay Analysis
    FDSPSUM   SUMMARY  First Dispatch Delay Analysis
    FEPILST   LIST     FEPI Request Activity
    FEPISUM   SUMMARY  FEPI Request Activity
  S ICLST     LIST     Interval Control Activity
    ICSUM     SUMMARY  Interval Control Activity
    IMSDBLST  LIST     Transaction DBCTL Usage Analysis
    IMSDBSUM  SUMMARY  Transaction DBCTL Usage Analysis
    IMSRQLST  LIST     Transaction DBCTL Req Analysis
    IMSRQSUM  SUMMARY  Transaction DBCTL Req Analysis
    IMSSUM    SUMMARY  IMS DBCTL PSB Usage Analysis
    JCLST     LIST     Journaling/Logging Activity
    JCSUM     SUMMARY  Journaling/Logging Activity
    JVMLST    LIST     Java Virtual Machine Analysis
    JVMSUM    SUMMARY  Java Virtual Machine Analysis
    PCLST     LIST     Program Request Activity
      ..........
      ..........
-----------------------------------------------------------------
```

We paged down and placed the S line action next to Interval Control Activity List report sample form

Figure 18-30 Sample Report Forms

We pressed F8 to page down through the list until we reached the `ICLST` sample form. We typed line action `S` next to it and pressed Enter. Then we pressed F3 to save our selection.

We returned to the Report Set screen, typed line action S next to the List report, and pressed Enter. We already produced the List report before, so a line entry for a List report is displayed on the screen. We typed line action S and pressed Enter. The screen in Figure 18-31 is displayed.

```
  File  Systems  Options  Help
-------------------------------------------------------------------------------
                        BASELINE - Performance List Report
Command ===>

System Selection:                          Report Output:
 APPLID . . SCSCPJA7  +                     DDname . . . . . . . . . LIST0001
 Image  . . SC66      +                     Print Lines per Page . .      (1-255)
 Group  . .           +

Report Format:
 Form . . . ICLST     +
 Title  . .


Selection Criteria:
 S  Performance  *
```

We select APPLID SCSCPJA7, since we are only concerned about mirror tasks in that region

We placed the cursor in the Form field and pressed F4 to select from the list of available report forms

We use the S line action and specify transaction CSMI and a small time interval in order to reduce the amount of output produced

Figure 18-31 Performance List report screen

We selected APPLID SCSCPJA7 and Report Form ICLST, and entered line action S to edit the Performance selection criteria. To limit the size of the report, we specified that we are only interested in CSMI transactions in a 10 second time interval from 10:16:42 to 10:16:52. We pressed F3 until we returned to the Report Set screen. We entered the RUN line action to submit the job. When the job completed, we received the report shown in Figure 18-32.

```
V1R3M0                                          CICS Performance Analyzer
                                                    Performance List
LIST0001 Printed at 18:55:59 10/07/2003    Data from 10:16:42  9/24/2003                APPLID SCSCPJA7      Page       1
Transaction Interval Control Usage and Wait Analysis - Detail

 Tran Userid     TaskNo Stop          ICSTART IC Total IC Delay IC Delay CICSWait CICSWait
                        Time                            Time     Count    Time     Count
 CSMI CICSUSER      377 10:16:42.927       1        1   .0000        0   .0000         0
 CSMI CICSUSER      379 10:16:44.273       1        1   .0000        0   .0000         0
 CSMI CICSUSER      381 10:16:44.640       1        1   .0000        0   .0000         0
 CSMI CICSUSER      383 10:16:44.749       1        1   .0000        0   .0000         0
 CSMI CICSUSER      385 10:16:45.017       1        1   .0000        0   .0000         0
 CSMI CICSUSER      387 10:16:45.324       1        1   .0000        0   .0000         0
 CSMI CICSUSER      389 10:16:46.229       1        1   .0000        0   .0000         0
 CSMI CICSUSER      391 10:16:46.674       1        1   .0000        0   .0000         0
 CSMI CICSUSER      393 10:16:46.933       1        1   .0000        0   .0000         0
 CSMI CICSUSER      395 10:16:47.397       1        1   .0000        0   .0000         0
      .........
      .........
```

This was the second mirror task from Figure 18-26 on page 405

Figure 18-32 Interval Control List Report

We find task number 379, which also appeared in our Cross-System Work report in Figure 18-26 on page 405. We see that this task issued one interval control start command. We went back to the application program and found that an EXEC CICS START TRAN command was added as part of the application changes. Our BR1 transaction ran in

SCSCPAA1, but the transaction that was being started ran in SCSCPJA7, so CICS had to run a mirror task in SCSCPJA7 to start the new application transaction.

All of the CSMI transactions which ran in SCSCPJA7 during our time interval were for interval control start commands. The additional mirror task was not responsible for adding significant suspend time so we did not investigate it further.

At this point, we have enough information to discuss with the applications programming group responsible for program BROWSE1. We can discuss what the program changes were supposed to accomplish and if other more efficient methods exist to accomplish the same task. If there are no programmatic alternatives, there are still some options that the CICS Systems Programmer can take to improve the situation.

18.9 Options to improve transaction BR1 performance

This section discusses two different options the CICS Systems Programmer has to improve the response time for transaction BR1.

18.9.1 Define the VENDORX file as a CICS Maintained Data Table

If the application cannot perform its task without browsing the VENDORX file, then the CICS Systems Programmer has a couple of options open to them. The first option is to eliminate the function shipping activity for read requests on the VENDORX file.

Our past experience with the VENDORX file indicates that a high percentage of the file requests are for read-only access. This type of access pattern is one of the things that makes it a good candidate for a CICS Maintained Data Table (CMDT). A major benefit of making VENDORX a CMDT is that function shipping is avoided for most read and browse requests. Without function shipping, we eliminate the IRIOWTT MRO link wait time for file control requests from our response time for transaction BR1.

To accomplish this change and measure the impact, we changed the VENDORX File definition to make it a CMDT in region SCSCPTA1. We ran the same TPNS workload and produced a Performance Summary report. Figure 18-33 shows that report.

```
V1R3M0                                          CICS Performance Analyzer
                                                     Performance Summary
                                                 ____________________________________
SUMMO001 Printed at  8:19:07 10/01/2003     Data from 07:43:53 10/01/2003 to 07:48:53 10/01/2003                    Page       1
File VENDORX changed to a CMDT
```

Tran	#Tasks	Avg Response Time	Max Response Time	Avg Dispatch Time	Avg User CPU Time	Avg Suspend Time	Max Suspend Time	Avg DispWait Time	Avg FC Wait Time	Avg FCAMRq	Avg IR Wait Time	Avg SC24UHWM	Avg SC31UHWM
BR1	859	.0097	.4000	.0051	.0037	.0045	.3201	.0006	.0000	0	.0023	432	33232
CSMI	12491	.0207	1.1531	.0012	.0009	.0194	1.1485	.0009	.0066	18	.0123	0	3
HX1	608	.0151	.4401	.0029	.0021	.0122	.4347	.0012	.0000	0	.0094	432	92758
IX2	1306	.0269	.9202	.0054	.0041	.0215	.8844	.0040	.0000	0	.0177	432	92758
IX8	1719	.0352	1.2923	.0049	.0039	.0302	1.2826	.0033	.0000	0	.0273	432	92721
PX2	2161	.0248	.9254	.0056	.0043	.0192	.9134	.0035	.0000	0	.0160	432	92682
PX3	1961	.0356	1.1494	.0081	.0064	.0274	1.1171	.0057	.0000	0	.0237	432	92741
SX2	651	.0612	1.2326	.0055	.0043	.0557	1.2238	.0056	.0000	0	.0521	432	92748
SX4	414	.0215	.4005	.0044	.0035	.0171	.3943	.0013	.0000	0	.0134	432	92594
SX6	2203	.0176	.6675	.0032	.0024	.0144	.6479	.0015	.0000	0	.0114	432	92703

Compare with the figures from Figure 18-13 on page 397

Figure 18-33 Performance Summary with VENDORX as a CMDT

In the report, the average response time for transaction BR1 was reduced to .0097 from the high of .0446 seconds in Figure 18-13 on page 397. Also the average Dispatch Wait time, which increased by 1450%, is now comparable to what it was before any application changes were made. And the average IR Wait Time is now less than its original value from Figure 18-12 on page 396.

18.9.2 Define the VENDORX file locally

In the CMDT scenario, we let CICS load the entire VENDORX file into a data table. For large application files, this may not be a viable option. Another option that you can choose to help improve transaction BR1 response time is to move the VENDORX file out of the FOR and back into SCSCPAA1. This eliminates all function shipping for VENDORX file requests from applications in this AOR.

To accomplish this change and measure the impact, we changed the VENDORX File definition to make it a local file in SCSCPAA1. We then ran the same TPNS workload and produced a Performance Summary report. Figure 18-34 shows that report.

```
V1R3M0                                                CICS Performance Analyzer
                                                         Performance Summary
                                                 ____________________________________
SUMMLOCL Printed at  8:39:08 10/01/2003     Data from 08:07:13 10/01/2003 to 08:12:13 10/01/2003                    Page       1
File VENDORX changed to be a local file
```

Tran	#Tasks	Avg Response Time	Max Response Time	Avg Dispatch Time	Avg User CPU Time	Avg Suspend Time	Max Suspend Time	Avg DispWait Time	Avg FC Wait Time	Avg FCAMRq	Avg IR Wait Time	Avg SC24UHWM	Avg SC31UHWM
BR1	859	.0090	.1404	.0051	.0038	.0039	.1246	.0002	.0000	80	.0021	432	33232
CSMI	11458	.0163	.5656	.0012	.0009	.0151	.5640	.0008	.0039	17	.0109	0	3
HX1	611	.0128	.1293	.0030	.0021	.0098	.1266	.0004	.0000	0	.0074	432	92569
IX2	1303	.0224	.2652	.0052	.0041	.0172	.2587	.0022	.0000	0	.0146	432	92535
IX8	1723	.0283	.2049	.0049	.0039	.0234	.2001	.0017	.0000	0	.0213	432	92532
PX2	2166	.0218	.3717	.0055	.0043	.0163	.3635	.0022	.0000	0	.0138	432	92514
PX3	1969	.0307	.5760	.0081	.0064	.0226	.5575	.0032	.0000	0	.0202	432	92468
SX2	652	.0581	.6916	.0076	.0057	.0505	.6817	.0083	.0257	36	.0000	432	92429
SX4	413	.0092	.1210	.0044	.0034	.0048	.1151	.0005	.0026	27	.0000	432	92688
SX6	2208	.0154	.4924	.0031	.0023	.0123	.4651	.0007	.0000	0	.0101	432	92490

Compare with the figures from Figure 18-13 on page 397

Figure 18-34 Performance Summary with VENDORX as a local file

Now the average response time for transaction BR1 is reduced to .0090 from the high of .0446 seconds in Figure 18-13 on page 397. Also the average Dispatch Wait time and the average IR Wait Time are back to their levels before any application changes were implemented.

An added benefit of moving the file to the AOR is that the average response time for transaction SX4, which updates the VENDORX file, is reduced by 63% from what we saw in Figure 18-12 on page 396.

18.10 Future problem determination efforts

We created several reports, all of which are useful in diagnosing future performance problems with this application. Instead of running them individually in separate jobs, you can run all reports in a single pass of SMF data. This is the benefit of the Report Set.

We specified the report interval in the selection criteria for each report. To use these reports as a set in the future, we don't want to have to update each report with new time ranges. CICS PA allows you to specify the time range independent of each individual report.

From the CICS PA Primary Option Menu, we selected option 2 and then typed line action S next to the report set we created to return to the Report Set screen. We typed line action S next to each report we created and updated the performance selection criteria to remove only the report interval, leaving any transaction or object list specification alone. We returned to the Report Set screen and typed line action S next to the global performance selection criteria as highlighted in bold in Figure 18-35.

```
File  Systems  Confirm  Options  Help
--------------------------------------------------------------------------------
EDIT                      Report Set - BASELINE                     Row 1 of 34
Command ===>                                                   Scroll ===> CSR

Description . . . CICS PA Report Set

Enter "/" to select action.

             ** Reports **                          Active
     -       Options                                  Yes
                  Global                              Yes
     -       Selection Criteria                       No
             S    Performance                         No
                  Exception                           No
     -       Performance Reports                      Yes
                  List                                Yes
                  List Extended                       No
                  Summary                             Yes
                  Totals                              No
                  Wait Analysis                       Yes
                  Cross-System Work                   Yes
                  Transaction Group                   No
                  BTS                                 No
```

Figure 18-35 Specifying Performance selection criteria for a Report Set

By specifying a performance selection criteria date and time range in this way, we can apply it to all reports in the report set rather than specifying it individually on each report. The next time we need to run this series of reports, we can provide the appropriate date and time criteria here. Then we can use the RUN command from the command line instead of the RUN line action on each individual report.

18.11 Conclusion

Using a series of CICS Performance Analyzer reports, we examined the individual components of the response time for an application transaction, and quantitatively measured the impact made by an application program change. We drilled down to find the cause of a performance problem, made system configuration changes, and measured the impact of those changes.

19

Historical Database

CICS Performance Analyzer (PA) V1.3 introduces the Historical Database (HDB), which enables you to collect and manage historical performance data for your CICS systems. It is a repository of CICS-related performance data by which you can maintain a history of CICS transactions. Reporting can be done on a list or a summary base. For more details, see Part 4 “Using the Historical Database (HDB)” in the *CICS Performance Analyzer for z/OS User’s Guide*, SC34-6307.

This chapter explains how to use the Historical Database. We concentrate on the summary Historical Database. We work through a workload scenario and show the different functions and reports that are available in the HDB.

19.1 Introduction to the HDB

Figure 19-1 provides a visual overview of the HDB. The register is a VSAM KSDS that can contain information about several different HDBs. An HDB is a description of data that is loaded in containers. The data in the containers is copied from CICS system management facility (SMF) records. The most important characteristics that are kept in an HDB tell which type of data is collected, summary or list. They also indicate which SMF fields are copied to the container records, the filtering criteria, the location of the data sets that represent the containers, and how long the containers must exist before deletion.

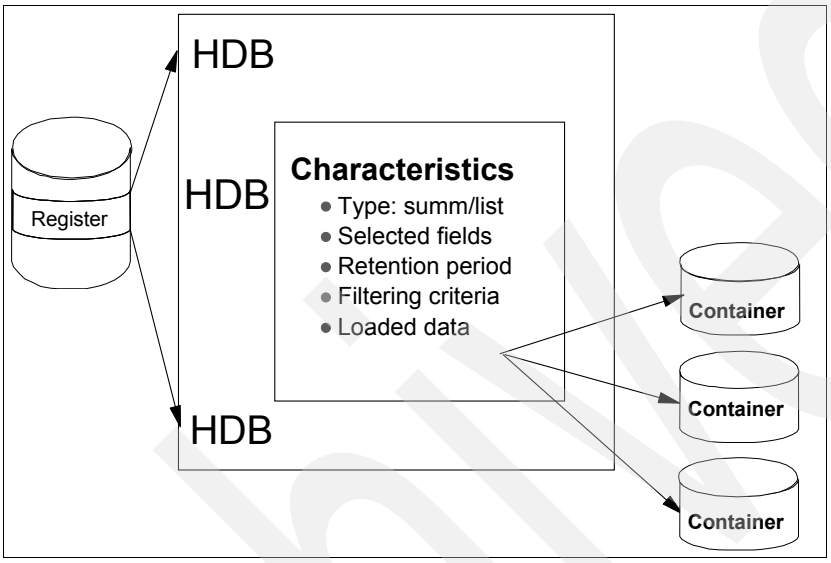

Figure 19-1 Overview of the HDB

19.2 System setup and scenario overview

Figure 19-2 shows the system setup of the Teleprocessing Network Simulator (TPNS) environment and the CICS regions that we used in this scenario.

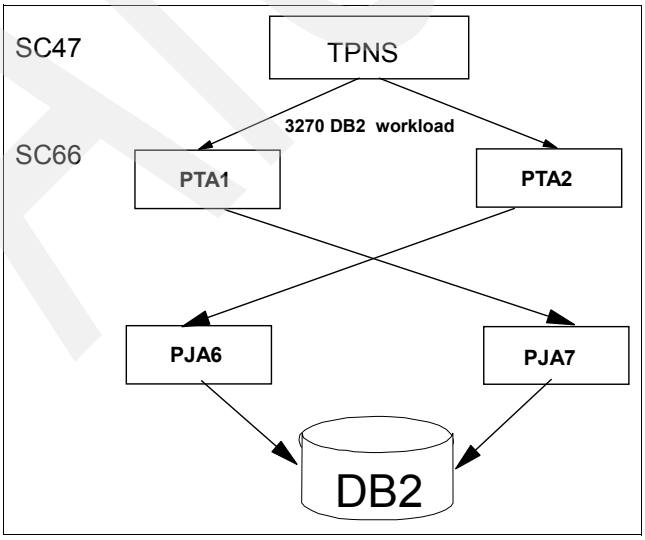

Figure 19-2 System setup for DB2 workload

On MVS image SC47, we used TPNS to simulate a 3270 workload on the shown CICS regions in MVS image SC66.

PTA1 and PTA2 are the SYSIDs of two TOR regions. PJA6 and PJA7 are the AORs. PTA1 does static routing of all incoming transactions to PJA7. PTA2 does static routing to PJA6. The two AORs are connected to the same DB2 system.

In a first run, three DB2 transactions are executed:

- DB2N executes program PROGDB2N, which executes 15 fetches from the DB2 provided sample table DSN8710.EMP. Between each fetch, there is a non-threadsafe EXEC CICS command. PROGDB2N is defined with CONCURRENCY(QUASIRENT).
- DB2R executes program PROGDB2R, which executes 15 fetches from the DB2 provided sample table DSN8710.EMP. There are no non-threadsafe EXEC CICS commands in this program so that it is defined with CONCURRENCY(THREADSAFE).
- DB2U executes program PROGDB2U that is an update application. It sends a BMS map to the 3270 screen. It gives the option to cancel the application or to perform a retrieve and update on the PHONENO field of table DSN8710.EMP. PROGDB2U is defined with CONCURRENCY(THREADSAFE).

In a later phase of the scenario, a fourth transaction is added. DB2V executes program PROGDB2V, which is a second update application. It contains only one SQL statement that performs an update of the PHONENO field of table DSN8710.EMP. PROGDB2V is defined with CONCURRENCY(QUASIRENT).

19.3 CICS changes

Authorized program analysis report (APAR) PQ76703 adds new monitoring and statistics functions to CICS TS 2.2. One of the new options specifies whether you want additional monitoring performance class data to be collected for the resource managers used by your transactions. This way, the time spent in the External Resource Managers (ERM) is added in different new Resource Manager Interface (RMI) fields in the SMF record. This option is activated via a new RMI parameter on the TYPE=INITIAL macro of the monitoring control table (MCT).

Before running this scenario, we assembled the MCT that is shown in Example 19-1. It shows the specification of the RMI=YES parameter and the suffix that we must specify for the MCT parameter in the SIT or SYSIN overriding of CICS.

Example 19-1 MCT with RMI=YES

```
RMI      DFHMCT TYPE=INITIAL,                                    *
               APPLNAME=YES,                                     *
               FILE=10,                                          *
               RMI=YES,                                          *
               SUFFIX=RM
*
         DFHMCT TYPE=FINAL
         END
```

In this scenario, we include the DB2 RMI field in the reports that we print with CICS PA.

19.4 Using the HDB

This chapter goes through the different options that are introduced by the Historical Database Manager. It starts by showing the different steps we had to go through to load and report from a Summary HDB. Then it discusses additional maintenance and housekeeping functions. Finally it uses a List HDB to demonstrate the export function that allows you to load the data from an HDB into a DB2 table.

19.4.1 Summary HDB

The usage of a summary HDB is similar to using performance summary reports. The records that are written to the HDB summarize transaction activity over a specified time interval. This reduces the amount of data written to the HDB. By measuring a set of transactions that issue DB2 SQL requests, we show you how to load, report, and interpret summary data.

From the CICS Performance Analyzer Primary Option Menu, we entered option 5 to select Historical Database as shown in Figure 19-3.

```
 V1R3M0          CICS Performance Analyzer - Primary Option Menu
Option ===> 5_____________________________________________________

0  CICS PA Profile       Customize your CICS PA dialog profile
1  System Definitions    Specify CICS Systems, SMF Files and Groups
2  Report Sets           Request and submit reports and extracts
3  Report Forms          Define Report Forms
4  Object Lists          Define Object Lists
5  Historical Database   Collect and process historical data
X  Exit                  Terminate CICS PA
```

Figure 19-3 Primary Option Menu: Selecting Historical Database

The Historical Database Menu (Figure 19-4) that opens shows the facilities of the Historical Database Manager.

```
  File  Options  Help
 ---------------------------------------------------------------------------
                          Historical Database Menu
 Option ===> 1

 1  Templates         Design HDB Templates
 2  Define            Define a new HDB
 3  Load              Load data into the HDBs
 4  Report            Submit HDB report requests
 5  Export            Export HDB data sets to DB2
 6  Maintenance       Maintain HDB definitions and data sets
 7  Housekeeping      Perform HDB housekeeping

 HDB Register . . . 'CICSRS4.CICSPA.HDB.DB2TREND'                  +
```

Figure 19-4 HDB primary menu

You must specify the name of the HDB register before you enter any option from the HDB menu. The HDB register is the inventory of all information associated with the CICS PA Historical Database Manager. The HDB register contains HDB definitions, data set definitions for HDB containers and the HDB templates. You can define as many registers as required.

However, only one register can be used at a time. We recommend that you define only one register. This allows users to share performance data.

As shown in Figure 19-5, we selected option 1 to create an HDB template and specified the name of the HDB register we wanted to use. Since this is the first action, the HDB register must still be created. CICS PA prompts for the required information to create the VSAM KSDS for the HDB register. As suggested in the *CICS Performance Analyzer for z/OS User's Guide*, SC34-6307, we specified the allocation unit of cylinders with a primary and secondary quantity of 1. We decided that the HDB register had to be allocated on volume TOTSTR.

```
---------------------------- Historical Database ----------------------------
                             Define HDB Register
 Command ===>

                                            Enter "/" to select option
                                               Edit IDCAMS command
                                               Browse errors only
  HDB Register Name  . . 'CICSRS4.CICSPA.HDB.DB2TREND'

                          Cluster Level Information:

  Space Units  . . . . . 1  1. Cylinders   Primary Quantity . . . 1
                            2. Tracks      Secondary Quantity . . 1
                            3. Records
                            4. Kilobytes
                            5. Megabytes
  Volume . . . . . . . . . TOTSTR
  Data Class . . . . . .
  Management Class . . .
  Storage Class  . . . .
```

Figure 19-5 HDB allocation information

CICS PA automatically allocates the VSAM data set for the HDB and shows the IDCAMS output, as shown in Figure 19-6.

```
IDCAMS  SYSTEM SERVICES                                  TIME: 11:11:01        10/02/03     PAGE      1

  DEFINE CLUSTER(NAME(CICSRS4.CICSPA.HDB.DB2TREND) -
           INDEXED  -
           CYLINDERS(1 1) -
           SHR(3,3) -
           FREESPACE(10 10) -
           REUSE -
           VOLUMES(TOTSTR) -
           ) -
         DATA(NAME(CICSRS4.CICSPA.HDB.DB2TREND.DATA) -
           KEYS(64 0)-
           RECORDSIZE(1024 32756)) -
        INDEX(NAME(CICSRS4.CICSPA.HDB.DB2TREND.INDEX))
IDC0508I DATA ALLOCATION STATUS FOR VOLUME TOTSTR IS 0
IDC0509I INDEX ALLOCATION STATUS FOR VOLUME TOTSTR IS 0
IDC0001I FUNCTION COMPLETED, HIGHEST CONDITION CODE WAS 0

IDC0002I IDCAMS PROCESSING COMPLETE. MAXIMUM CONDITION CODE WAS 0
************************************************* Bottom of Data ******************************************************
```

Figure 19-6 IDCAMS output from the DEFINE CLUSTER of the HDB register

We pressed F3 to go to the empty HDB Templates screen (Figure 19-7). HDB templates allow you to define the type and format of the data in the HDB. This is similar to the way Report

Forms define the type and format of the data in a report. Using the NEW command, we entered the name of the template that we were going to define, which was DB2TRNDS.

```
  File  Options  Help
 ------------------------------------------------------------------------------
                                HDB Templates
 Command ===> NEW DB2TRNDS                                   Scroll ===> CSR

 Select to edit Template. Enter NEW command to define a new Template.

 /  Name     Type              Description                Changed        ID
 ********************************* End of list *********************************
```

Figure 19-7 HDB Templates screen to create the DB2TRNDS template

CICS PA presents a pop-up screen (Figure 19-8), where we selected the type of template that we wanted to use. We selected option 2 for a summary template because we wanted to look for a trend in the DB2 transactions.

```
--------------------- Historical Database ---------------------
  File  Systems  Options  Help
 ------------------------------------------------------------
                      New HDB Template
 Command ===>

 Specify the name of the new Template and its options.

 Name . . . . . DB2TRNDS

 APPLID . . . .          +     Version (VRM) . .      +
 MVS Image  . .
                                Field Categories

 Type 2  1. List
         2. Summary
```

Figure 19-8 Selecting a summary template

The next screen asks for the contents of the template. On this screen, we edited the template format and content to meet our specific reporting and analysis requirements. For this summary template, we chose to have the fields as shown in Figure 19-9. Notice also that we typed line action S next to the Performance selection criteria option. Selection criteria can be specified to apply filtering to the data being collected by the HDB template.

```
  File  Edit  Confirm  Upgrade  Options  Help
--------------------------------------------------------------------------------
                      EDIT Summary Template - DB2TRNDS     Row 1 of 231 More: >
Command ===>                                                   Scroll ===> CSR

Description  . . . Summary Template for DB2TREND     Version (VRM): 620

Selection Criteria:
 s  Performance                    Time Interval  . . 00:01:00  (hh:mm:ss)

     Field
/    Name +    K  Description
     START     A  Task start time
     APPLID    A  CICS Generic APPLID
     TRAN      A  Transaction identifier
     TASKCNT      Total Task count
     RESPONSE     Transaction response time
     DISPATCH     Dispatch time
     CPU          CPU time
     SUSPEND      Suspend time
     L8CPU        CICS L8 TCB dispatch time
     DISPWAIT     Redispatch wait time
     DB2CONWT     DB2 Connection wait time
     DB2RDYQW     DB2 Thread wait time
     DB2REQCT     DB2 requests
     DB2WAIT      DB2 SQL/IFI wait time
     CHMODECT     Change-TCB modes requests
     MAXOTDLY     MAXOPENTCBS wait time
     RMIDB2       RMI elapsed time for DB2 requests
     IRWAIT       MRO link wait time
     DSPDELAY     First dispatch wait time
     RMIOTHER     RMI other elapsed time
     RMITOTAL     RMI total elapsed time
     RMIOTIME     Resource Manager Interface (RMI) other time
     RMISUSP      Resource Manager Interface (RMI) suspend time
     RMITIME      Resource Manager Interface (RMI) elapsed time
```

Figure 19-9 Field selection of the DB2TRNDS template

Presuming that CICS is running all day, we entered a five minute time interval from a peak period in the Performance Select Statement screen (Figure 19-10). We did not specify a date, because we intended to look at an extract of the SMF records that is taken every day at the same time. We chose only to have reports about transactions with names that start with DB2.

```
  File  Edit  Object Lists  Options  Help
--------------------------------------------------------------------------------
                    DB2TRNDS - Performance Select Statement Row 1 of 1 More: >
Command ===>                                                  Scroll ===> CSR

         Active  --------------- Report Interval ----------------
   Inc   Start   -------- From ---------  --------- To ----------
   Exc   Stop    MM/DD/YYYY  HH:MM:SS.TH  MM/DD/YYYY  HH:MM:SS.TH
   INC   START               10:55:00.00              11:00:00.00

--------------------------------------------------------------------------------

   Inc  Field             --- Value or Range ---   Object
/  Exc  Name +    Type    Value/From   To          List +
   INC  TRAN              DB2*
********************************* End of list ********************************
```

Figure 19-10 DB2TRNDS selection criteria

This ends the creation of the summary template. We pressed F3 until we reached the Historical Database Menu, where we entered option 2 to define the HDB itself. As shown in Figure 19-11, we entered the name and description, the name of the template to be used, the data retention period, and the information for the storage space allocation and attributes for the container data set that will hold the data. Since this is a summary HDB, we did not have to allocate big data sets.

```
  File  Systems  Options  Help
--------------------------------------------------------------------------------
                              New HDB Definition
Command ===>

Specify new HDB definition options then press EXIT to save.

Name . . . . . . DB2TRNDS  APPLID          +  Image
Description  . . DB2TREND HDB

HDB Format:                           Selection Criteria:
 Template  . . . DB2TRNDS  +              Performance

Data Retention Period:
 Years . .     Months . .     Weeks . . 1    Days . .     Hours . .

Data Set Allocation Settings:
 DSN Prefix . . . . . . CICSRS4
 Management class . . .            (Blank for default management class)
 Storage class  . . . .            (Blank for default storage class)
  Volume serial . . . .            (Blank for system default volume)
  Device type . . . . .            (Generic unit or device address)
 Data class . . . . . .            (Blank for default data class)
  Space Units . . . . . CYLS       (TRKS, CYLS)
  Primary quantity  . . 1          (In above units)
  Secondary quantity    1          (In above units)
```

Figure 19-11 DB2TRNDS HDB definition

We pressed F3 to create the definition. Back on the Historical Database Menu, we selected option 3 to load the data into a container. Figure 19-12 shows the Load HDBs screen with our first HDB, which we selected.

```
  File  Options  Help
 ------------------------------------------------------------------------------
                                  Load HDBs                   Row 1 to 1 of 1
 Command ===>                                               Scroll ===> CSR

 Select to load an HDB.

    Name     Type              Description                Changed        ID
 s DB2TRNDS SUMMARY  DB2TREND HDB                     2003/10/02 13:23 CICSRS4
 ********************************** End of list **********************************
```

Figure 19-12 Selecting DB2TRNDS HDB on the Load HDBs screen

Figure 19-13 shows Load Summary screen which is displayed next. We did not complete any parameters on this screen. We pressed Enter twice to see the generated JCL of the load job.

```
  File  Systems  Options  Help
 ------------------------------------------------------------------------------
                        Load SUMMARY HDB DB2TRNDS
 Command ===>

 Specify HDB load options then press Enter to continue submit.

                                        ----- Report Interval ------
 System Selection:                           MM/DD/YYYY  HH:MM:SS.TH
  APPLID . .           +                 From
  Image  . . SC66      +                 To
  Group  . .           +

 Enter "/" to select option
 /  Edit JCL before submit
```

Figure 19-13 Load SUMMARY for DB2TRNDS HDB

The JCL in Example 19-2 shows that we are using multiple SMF input data sets. In our scenario, the SMF data sets filled up and switched several times. The original SMF data sets were archived to the data sets that you see in the different SMFINxx data sets. The archived data sets are in a generation data group (GDG) that contains 30 data sets. SMF data that must be kept for a longer time requires a manual copy. After loading the HDB, we no longer needed these data sets because all the reporting came from the data stored in the HDB.

Example 19-2 Generated JCL for loading the DB2TRNDS HDB

```
//        JOB
//* CICSPA V1R3 HDB LOAD JCL
//CICSPA   EXEC PGM=CPAMAIN
//STEPLIB  DD  DSN=CPA13.SCPALINK,
//             DISP=SHR
//CPAHDBRG DD  DSN=CICSRS4.CICSPA.HDB.DB2TREND,
//             DISP=SHR
//SYSPRINT DD  SYSOUT=*
```

```
//* SMF Input Files
//SMFIN001 DD DSN=SMFDATA.CICSRECS.G0409V00,
//            DISP=SHR
//SMFIN002 DD DSN=SMFDATA.CICSRECS.G0410V00,
//            DISP=SHR
//SMFIN003 DD DSN=SMFDATA.CICSRECS.G0411V00,
//            DISP=SHR
//SMFIN004 DD DSN=SMFDATA.CICSRECS.G0412V00,
//            DISP=SHR
//SMFIN005 DD DSN=SMFDATA.CICSRECS.G0413V00,
//            DISP=SHR
//SMFIN006 DD DSN=SMFDATA.CICSRECS.G0414V00,
//            DISP=SHR
//SMFIN007 DD DSN=SMFDATA.CICSRECS.G0415V00,
//            DISP=SHR
//SMFIN008 DD DSN=SMFDATA.CICSRECS.G0416V00,
//            DISP=SHR
//* Command Input
//SYSIN DD *
* Report Set =DB2TRNDS
* Description=CICSPA HDB request
* Reports for Image=SC66
*            Description=System added by take-up
         CICSPA IN(SMFIN001,
                   SMFIN002,
                   SMFIN003,
                   SMFIN004,
                   SMFIN005,
                   SMFIN006,
                   SMFIN007,
                   SMFIN008),
                NOAPPLID,
                LINECNT(60),
                FORMAT(':','/'),
            HDB(OUTPUT(HDBL0001),LOAD(DB2TRNDS))
/*
```

Notice that the time selection that we entered in the template Performance select statement in Figure 19-10 on page 422 is kept in the HDB. It is not visible in the CICS PA commands. If you need to change the time limits, you go again through the CICS PA screens to update the template selection criteria before you submit the job.

We entered the SUB command on the JCL edit screen to submit the load job. Figure 19-14 shows the recap report of the load job.

```
 V1R3M0                                          CICS Performance Analyzer
                                                   HDB LOAD Recap Report
                                    ____________________________________________
HDBL0001 Printed at 15:53:04 10/02/2003    Data from 10:54:00 10/02/2003 to 10:59:00 10/02/2003                    Page       1


LOAD requested for HDB: DB2TRNDS  Register DSN: CICSRS4.CICSPA.HDB.DB2TREND

The following Container(s) were created and loaded:
  Container DSN: CICSRS4.DB2TRNDS.D03275.T155302.HDB           No of Records: 62
    Start Timestamp: 2003-10-02-10.54.00         End Timestamp: 2003-10-02-10.59.00

LOAD process complete.
```

Figure 19-14 HDB LOAD Recap Report

Only 62 records were written to the allocated container. Because this is a summary container, all average values are calculated before loading the HDB. For a list HDB, the fields that are specified in the list template are stored in one record per transaction.

We produced a report from the data that is now available in the HDB. Using the summary template, we selected several fields that we thought to be necessary for our trend follow up. However, as in other reports, the number of fields printed is determined by the maximum page width of 132 characters. Therefore, we left the HDB Manager. From the Primary Option Menu, we selected the report forms option 3 to create a summary report form. If we did not provide a report form, the order of the printed fields would be as specified in the template but up to 132 characters. The report form that we created shown in Figure 19-15 is named DB2SUM.

```
File  Edit  Confirm  Upgrade  Options  Help
 ------------------------------------------------------------------------------
                     EDIT SUMMARY Report Form - DB2SUM     Row 1 of 237 More: >
 Command ===>                                                Scroll ===> CSR

 Description  . . . Summary Report Form              Version (VRM): 620

 Selection Criteria:
     Performance

    Field
 /  Name +    S Type    Fn   Description
    START     A TIMES        Task start time
    APPLID    A              CICS Generic APPLID
    TRAN      A              Transaction identifier
    TASKCNT                  Total Task count
    RESPONSE            AVE  Transaction response time
    DISPATCH    TIME    AVE  Dispatch time
    CPU         TIME    AVE  CPU time
    SUSPEND     TIME    AVE  Suspend time
    L8CPU       TIME    AVE  CICS L8 TCB dispatch time
    DISPWAIT    TIME    AVE  Redispatch wait time
    DB2REQCT            AVE  DB2 requests
    CHMODECT            AVE  Change-TCB modes requests
    MAXOTDLY    TIME    AVE  MAXOPENTCBS wait time
    RMIDB2      TIME    AVE  RMI elapsed time for DB2 requests
    EOR                      ---------------- End of Report ----------------
```

Figure 19-15 Summary Report Form for use with the HDBTRNDS HDB

This being done, we returned to the HDB Manager. On the Historical Database Menu, we selected option 4, which brought us to the HDB Reporting screen (Figure 19-16).

```
  File  Options  Help
 ------------------------------------------------------------------------------
                                HDB Reporting                  Row 1 to 1 of 1
 Command ===>                                                 Scroll ===> CSR

 Select to run report.

    Name     Type              Description                Changed        ID
 s DB2TRNDS SUMMARY  DB2TREND HDB                     2003/10/02 13:23 CICSRS4
 ********************************** End of list ********************************
```

Figure 19-16 Selecting the DB2TRNDS HDB for reporting

We selected the DB2TRNDS Historical Database. Then the Run SUMMAR HDB Report screen (Figure 19-17) is displayed. We entered the name of the summary report form that we created and left all other fields on their default value.

```
  File  Options  Help
 ------------------------------------------------------------------------------
                      Run SUMMARY HDB Report - DB2TRNDS
 Command ===>

 Specify Report request options then press Enter to continue submit.

 Report Format:                          ----- Report Interval ------
  Report Form  . . DB2SUM    +                MM/DD/YYYY  HH:MM:SS.TH
                                          From
                                          To

 Processing Options:                      Reporting Options:
  Time Interval  . . 00:01:00 (hh:mm:ss)      Exclude Totals

 Enter "/" to select option
 /  Edit JCL before submit

 HDB contains data from 2003/10/02 10:54 to 2003/10/02 10:59.
```

Figure 19-17 Run SUMMARY HDB report for HDB DB2TRNDS

Example 19-3 shows the resulting JCL that is generated. At the bottom of the JCL, you can see a DD statement for the container data set that is used for printing the requested report. If there were more containers, they would all be listed in this generated JCL. As the comments in the JCL explain, this DD statement is there only for reference and is not required.

Example 19-3 Generated JCL for printing the DB2TRNDS HDB

```
//         JOB
//* CICSPA V1R3 HDB Report JCL
//CICSPA   EXEC PGM=CPAMAIN
//STEPLIB  DD DSN=CPA13.SCPALINK,
//            DISP=SHR
//CPAHDBRG DD DSN=CICSRS4.CICSPA.HDB.DB2TREND,
//            DISP=SHR
//SYSPRINT DD SYSOUT=*
//* Command Input
```

```
//SYSIN DD *
* Report Set =DB2TRNDS
* Description=CICSPA HDB request
         CICSPA NOAPPLID,
                LINECNT(60),
                FORMAT(':','/'),
            HDB(OUTPUT(HDBR0001),REPORT(DB2TRNDS),
                INTERVAL(00:01:00),
                FIELDS(START(TIMES),
                       APPLID,
                       TRAN,
                       TASKCNT,
                       RESPONSE(AVE),
                       DISPATCH(TIME(AVE)),
                       CPU(TIME(AVE)),
                       SUSPEND(TIME(AVE)),
                       L8CPU(TIME(AVE)),
                       DISPWAIT(TIME(AVE)),
                       DB2REQCT(AVE),
                       CHMODECT(AVE),
                       MAXOTDLY(TIME(AVE)),
                       RMIDB2(TIME(AVE))))
/*
//* HDB Container Data Sets. HDB Report processing does not require
//* these data sets to be included in the JCL as they are dynamically
//* allocated when required. They are included:
//* 1) for your reference
//* 2) to ensure that all required data sets are cataloged
//* 3) to allow DFHSM to recall required data sets up front
//HDB00001 DD DISP=SHR,DSN=CICSRS4.DB2TRNDS.D03275.T155302.HDB
```

After submitting this JCL, we received our first report shown in Figure 19-18 and Figure 19-19 on page 429.

You can ignore the first lines of this report. They show a start time of 10:54. These are transactions that started before but ended within the time interval that we specified. We do not print them again in the following reports.

Within the time interval, you see, for each APPLID, a list of the selected transactions. After each group of transactions, a total for this group is inserted and at the end of each time interval an additional grand total is printed. Note that these totals can be left out by selecting the Exclude Totals option on the Run SUMMARY HDB Reporting screen.

This is a rather long report because this example shows a one minute default time interval. Bigger time intervals result in less data written to the container and therefore smaller reports. An optimal reporting interval must be found between the amount of data loaded and the level of detail of the report. We decided that for the next results, we would report on the five minutes interval that we collect data for our measurements.

```
V1R3M0                                          CICS Performance Analyzer
                                              Historical Database Summary
                                         ____________________________________
HDBR0001 Printed at 15:59:08 10/02/2003     Data from 10:54:00 10/02/2003 to 10:59:00 10/02/2003                    Page       1
```

Start Interval	APPLID	Tran	Tasks	Avg Response Time	Avg Dispatch Time	Avg User CPU Time	Avg Suspend Time	Avg L8 CPU Time	Avg DispWait Time	Avg DB2 Reqs	Avg ChngMode	Avg MaxOTDly Time	Avg RMI DB2 Time
2003/10/02 10:54	SCSCPJA6	DB2N	1	.2476	.0056	.0035	.2420	.0025	.2399	17	36	.0000	.0040
2003/10/02 10:54	SCSCPJA6	DB2U	6	.1907	.0445	.0012	.1461	.0006	.0735	1	2	.0000	.0070
2003/10/02 10:54	SCSCPJA6		7	.1988	.0390	.0015	.1598	.0009	.0972	3	7	.0000	.0065
2003/10/02 10:54			7	.1988	.0390	.0015	.1598	.0009	.0972	3	7	.0000	.0065
2003/10/02 10:55	SCSCPJA6	DB2N	1224	.0215	.0077	.0027	.0137	.0017	.0121	17	36	.0000	.0062
2003/10/02 10:55	SCSCPJA6	DB2R	1418	.0114	.0071	.0022	.0043	.0016	.0027	17	4	.0000	.0060
2003/10/02 10:55	SCSCPJA6	DB2U	6895	.0063	.0038	.0009	.0025	.0004	.0012	0	2	.0000	.0030
2003/10/02 10:55	SCSCPJA6		9537	.0090	.0048	.0013	.0042	.0007	.0028	5	7	.0000	.0039
2003/10/02 10:55	SCSCPJA7	DB2N	1276	.0206	.0072	.0026	.0134	.0017	.0117	17	36	.0000	.0058
2003/10/02 10:55	SCSCPJA7	DB2R	1421	.0114	.0071	.0022	.0043	.0015	.0028	17	4	.0000	.0059
2003/10/02 10:55	SCSCPJA7	DB2U	6794	.0062	.0037	.0009	.0024	.0004	.0012	0	2	.0000	.0029
2003/10/02 10:55	SCSCPJA7		9491	.0089	.0047	.0013	.0042	.0007	.0028	5	7	.0000	.0037
2003/10/02 10:55	SCSCPTA1	DB2N	1276	.0317	.0014	.0004	.0304	.0000	.0021	0	0	.0000	.0000
2003/10/02 10:55	SCSCPTA1	DB2R	1421	.0228	.0014	.0004	.0214	.0000	.0026	0	0	.0000	.0000
2003/10/02 10:55	SCSCPTA1	DB2U	6794	.0178	.0017	.0003	.0161	.0000	.0019	0	0	.0000	.0000
2003/10/02 10:55	SCSCPTA1		9491	.0204	.0016	.0003	.0188	.0000	.0020	0	0	.0000	.0000
2003/10/02 10:55	SCSCPTA2	DB2N	1224	.0321	.0013	.0003	.0308	.0000	.0017	0	0	.0000	.0000
2003/10/02 10:55	SCSCPTA2	DB2R	1418	.0223	.0013	.0004	.0209	.0000	.0023	0	0	.0000	.0000
2003/10/02 10:55	SCSCPTA2	DB2U	6895	.0177	.0017	.0003	.0160	.0000	.0018	0	0	.0000	.0000
2003/10/02 10:55	SCSCPTA2		9537	.0203	.0016	.0003	.0186	.0000	.0019	0	0	.0000	.0000
2003/10/02 10:55			38056	.0146	.0032	.0008	.0115	.0004	.0024	3	3	.0000	.0019
2003/10/02 10:56	SCSCPJA6	DB2N	1180	.0218	.0077	.0027	.0142	.0017	.0120	17	36	.0002	.0062
2003/10/02 10:56	SCSCPJA6	DB2R	1423	.0120	.0072	.0022	.0048	.0015	.0028	17	4	.0001	.0060
2003/10/02 10:56	SCSCPJA6	DB2U	6825	.0065	.0038	.0009	.0027	.0004	.0012	1	2	.0000	.0030
2003/10/02 10:56	SCSCPJA6		9428	.0093	.0048	.0013	.0045	.0007	.0028	5	7	.0001	.0038
2003/10/02 10:56	SCSCPJA7	DB2N	1216	.0213	.0075	.0026	.0138	.0017	.0121	17	36	.0001	.0060
2003/10/02 10:56	SCSCPJA7	DB2R	1469	.0113	.0069	.0022	.0044	.0015	.0028	17	4	.0001	.0057
2003/10/02 10:56	SCSCPJA7	DB2U	6695	.0066	.0039	.0009	.0026	.0004	.0012	1	2	.0000	.0031
2003/10/02 10:56	SCSCPJA7		9380	.0092	.0048	.0013	.0044	.0008	.0029	5	7	.0001	.0039
2003/10/02 10:56	SCSCPTA1	DB2N	1216	.0326	.0014	.0004	.0312	.0000	.0019	0	0	.0000	.0000
2003/10/02 10:56	SCSCPTA1	DB2R	1469	.0223	.0014	.0004	.0209	.0000	.0024	0	0	.0000	.0000
2003/10/02 10:56	SCSCPTA1	DB2U	6695	.0183	.0018	.0003	.0165	.0000	.0018	0	0	.0000	.0000
2003/10/02 10:56	SCSCPTA1		9380	.0208	.0017	.0003	.0191	.0000	.0019	0	0	.0000	.0000
2003/10/02 10:56	SCSCPTA2	DB2N	1180	.0321	.0014	.0003	.0308	.0000	.0021	0	0	.0000	.0000
2003/10/02 10:56	SCSCPTA2	DB2R	1423	.0238	.0013	.0004	.0224	.0000	.0030	0	0	.0000	.0000
2003/10/02 10:56	SCSCPTA2	DB2U	6825	.0181	.0018	.0003	.0163	.0000	.0019	0	0	.0000	.0000
2003/10/02 10:56	SCSCPTA2		9428	.0207	.0017	.0003	.0191	.0000	.0021	0	0	.0000	.0000
2003/10/02 10:56			37616	.0150	.0032	.0008	.0118	.0004	.0024	3	3	.0000	.0019
2003/10/02 10:57	SCSCPJA6	DB2N	1181	.0229	.0077	.0027	.0153	.0017	.0132	17	36	.0000	.0061
2003/10/02 10:57	SCSCPJA6	DB2R	1393	.0124	.0077	.0022	.0047	.0016	.0031	17	4	.0000	.0065
2003/10/02 10:57	SCSCPJA6	DB2U	6893	.0073	.0042	.0009	.0030	.0004	.0013	1	2	.0000	.0034
2003/10/02 10:57	SCSCPJA6		9467	.0100	.0052	.0013	.0048	.0007	.0031	5	7	.0000	.0042
2003/10/02 10:57	SCSCPJA7	DB2N	1193	.0224	.0081	.0026	.0143	.0017	.0124	17	36	.0000	.0066
2003/10/02 10:57	SCSCPJA7	DB2R	1490	.0127	.0077	.0022	.0050	.0015	.0032	17	4	.0000	.0064
2003/10/02 10:57	SCSCPJA7	DB2U	6712	.0071	.0043	.0009	.0028	.0004	.0013	0	2	.0000	.0035
2003/10/02 10:57	SCSCPJA7		9395	.0100	.0053	.0013	.0046	.0007	.0030	5	7	.0000	.0043
2003/10/02 10:57	SCSCPTA1	DB2N	1193	.0354	.0014	.0004	.0340	.0000	.0022	0	0	.0000	.0000
2003/10/02 10:57	SCSCPTA1	DB2R	1490	.0266	.0014	.0004	.0251	.0000	.0034	0	0	.0000	.0000

Figure 19-18 Summary report output of the DB2TRNDS HDB (Part 1 of 2)

```
V1R3M0                                          CICS Performance Analyzer
                                               Historical Database Summary
                                   ____________________________________________
DBR0001 Printed at 15:59:08 10/02/2003     Data from 10:54:00 10/02/2003 to 10:59:00 10/02/2003                    Page       2
```

Start Interval	APPLID	Tran	Tasks	Avg Response Time	Avg Dispatch Time	Avg User CPU Time	Avg Suspend Time	Avg L8 CPU Time	Avg DispWait Time	Avg DB2 Reqs	Avg ChngMode	Avg MaxOTDly Time	Avg RMI DB2 Time
2003/10/02 10:57	SCSCPTA1	DB2U	6712	.0209	.0018	.0003	.0191	.0000	.0024	0	0	.0000	.0000
2003/10/02 10:57	SCSCPTA1		9395	.0237	.0017	.0004	.0219	.0000	.0025	0	0	.0000	.0000
2003/10/02 10:57	SCSCPTA2	DB2N	1181	.0352	.0014	.0004	.0338	.0000	.0018	0	0	.0000	.0000
2003/10/02 10:57	SCSCPTA2	DB2R	1393	.0262	.0016	.0004	.0246	.0000	.0031	0	0	.0000	.0000
2003/10/02 10:57	SCSCPTA2	DB2U	6893	.0210	.0018	.0003	.0191	.0000	.0025	0	0	.0000	.0000
2003/10/02 10:57	SCSCPTA2		9467	.0235	.0017	.0003	.0218	.0000	.0025	0	0	.0000	.0000
2003/10/02 10:57			37724	.0168	.0035	.0008	.0133	.0004	.0028	3	3	.0000	.0021
2003/10/02 10:58	SCSCPJA6	DB2N	1149	.0230	.0079	.0027	.0151	.0017	.0128	17	36	.0002	.0064
2003/10/02 10:58	SCSCPJA6	DB2R	1489	.0122	.0072	.0022	.0049	.0015	.0028	17	4	.0002	.0061
2003/10/02 10:58	SCSCPJA6	DB2U	6711	.0069	.0039	.0009	.0029	.0004	.0012	0	2	.0001	.0032
2003/10/02 10:58	SCSCPJA6		9349	.0097	.0049	.0013	.0047	.0008	.0029	5	6	.0002	.0040
2003/10/02 10:58	SCSCPJA7	DB2N	1167	.0223	.0079	.0026	.0144	.0017	.0127	17	36	.0000	.0065
2003/10/02 10:58	SCSCPJA7	DB2R	1477	.0128	.0079	.0022	.0048	.0015	.0031	17	4	.0001	.0068
2003/10/02 10:58	SCSCPJA7	DB2U	6715	.0066	.0040	.0009	.0025	.0004	.0012	1	2	.0000	.0032
2003/10/02 10:58	SCSCPJA7		9359	.0095	.0051	.0013	.0044	.0007	.0029	5	7	.0000	.0042
2003/10/02 10:58	SCSCPTA1	DB2N	1167	.0347	.0014	.0004	.0334	.0000	.0023	0	0	.0000	.0000
2003/10/02 10:58	SCSCPTA1	DB2R	1477	.0263	.0014	.0004	.0248	.0000	.0031	0	0	.0000	.0000
2003/10/02 10:58	SCSCPTA1	DB2U	6719	.0197	.0018	.0003	.0179	.0000	.0022	0	0	.0000	.0000
2003/10/02 10:58	SCSCPTA1		9363	.0226	.0017	.0003	.0209	.0000	.0023	0	0	.0000	.0000
2003/10/02 10:58	SCSCPTA2	DB2N	1149	.0354	.0014	.0003	.0339	.0000	.0021	0	0	.0000	.0000
2003/10/02 10:58	SCSCPTA2	DB2R	1489	.0244	.0014	.0004	.0230	.0000	.0024	0	0	.0000	.0000
2003/10/02 10:58	SCSCPTA2	DB2U	6718	.0201	.0018	.0003	.0184	.0000	.0022	0	0	.0000	.0000
2003/10/02 10:58	SCSCPTA2		9356	.0227	.0017	.0003	.0210	.0000	.0022	0	0	.0000	.0000
2003/10/02 10:58			37427	.0161	.0034	.0008	.0128	.0004	.0026	3	3	.0000	.0021
2003/10/02 10:59	SCSCPJA6	DB2N	1471	.0251	.0082	.0026	.0168	.0017	.0134	17	36	.0014	.0068
2003/10/02 10:59	SCSCPJA6	DB2R	1758	.0151	.0084	.0022	.0067	.0015	.0033	17	4	.0012	.0073
2003/10/02 10:59	SCSCPJA6	DB2U	7941	.0083	.0047	.0009	.0036	.0004	.0013	0	2	.0005	.0040
2003/10/02 10:59	SCSCPJA6		11170	.0115	.0057	.0013	.0058	.0008	.0032	5	7	.0007	.0049
2003/10/02 10:59	SCSCPJA7	DB2N	1432	.0257	.0086	.0026	.0171	.0017	.0139	17	36	.0007	.0072
2003/10/02 10:59	SCSCPJA7	DB2R	1647	.0136	.0081	.0022	.0055	.0015	.0030	17	4	.0003	.0071
2003/10/02 10:59	SCSCPJA7	DB2U	8151	.0079	.0045	.0009	.0033	.0004	.0014	0	2	.0003	.0037
2003/10/02 10:59	SCSCPJA7		11230	.0110	.0056	.0013	.0054	.0007	.0032	5	7	.0003	.0047
2003/10/02 10:59	SCSCPTA1	DB2N	1437	.0417	.0017	.0004	.0400	.0000	.0037	0	0	.0000	.0000
2003/10/02 10:59	SCSCPTA1	DB2R	1653	.0301	.0015	.0004	.0286	.0000	.0041	0	0	.0000	.0000
2003/10/02 10:59	SCSCPTA1	DB2U	8163	.0236	.0019	.0003	.0217	.0000	.0032	0	0	.0000	.0000
2003/10/02 10:59	SCSCPTA1		11253	.0269	.0018	.0004	.0251	.0000	.0034	0	0	.0000	.0000
2003/10/02 10:59	SCSCPTA2	DB2N	1472	.0396	.0015	.0003	.0381	.0000	.0034	0	0	.0000	.0000
2003/10/02 10:59	SCSCPTA2	DB2R	1759	.0301	.0015	.0004	.0286	.0000	.0039	0	0	.0000	.0000
2003/10/02 10:59	SCSCPTA2	DB2U	7952	.0243	.0020	.0003	.0223	.0000	.0033	0	0	.0000	.0000
2003/10/02 10:59	SCSCPTA2		11183	.0272	.0019	.0003	.0254	.0000	.0034	0	0	.0000	.0000
2003/10/02 10:59			44836	.0192	.0037	.0008	.0154	.0004	.0033	3	3	.0003	.0024

Figure 19-19 Summary report output of the DB2TRNDS HDB (Part 2 of 2)

Loading the HDB with summary records can be a daily process so that a trend in transaction behavior is easy to follow in the report. A graph produced with these daily results would show severe fluctuations when they would appear.

For the next load of data to the HDB, we could have gone to the Systems Definition Menu of CICS PA and assigned a set of new SMF input data sets to system SC66. Then we again could have used the load option on the Historical Database Menu to generate a new load JCL and submit the job.

However, when we submitted the load job the first time, we decided to save the JCL in a separate JCL library. CICS PA uses a temporary library for generating the JCL. You find the name of this data set on the EDIT line of the ISPF panel (Figure 19-20).

```
EDIT       CICSRS4.SC66.SPFTEMP1.CNTL                          Columns 00001 00080
Command ===>                                                      Scroll ===> PAGE
****** ********************************* Top of Data ***********************************
000001 //         JOB
000002 //* CICSPA V1R3 HDB LOAD JCL
000003 //CICSPA   EXEC PGM=CPAMAIN
000004 //STEPLIB  DD  DSN=CPA13.SCPALINK,
000005 //             DISP=SHR
000006 //CPAHDBRG DD  DSN=CICSRS4.CICSPA.HDB.DB2TRND,
000007 //             DISP=SHR
000008 //SYSPRINT DD  SYSOUT=*
000009 //* SMF Input Files
000010 //SMFIN001 DD DSN=SMFDATA.CICSRECS.G0136V00,
000011 //            DISP=SHR
. . .
```

Figure 19-20 Load JCL created in a temporary library

In ISPF split screen mode, we edited a new member from a JCL library and copied the content of the temporary data set containing the load JCL as shown in Example 19-2 on page 423 into our private library. As a second step of this job, in the same way, after the copy of the load job, we copied the JCL of the report job that is shown in Example 19-3 on page 426. The resulting job is shown in Example 19-4.

Because all information is contained in the HDB, there is no need to change the HDB control statement of the load step. We only had to change the SMF input data set names and eventually adapt the list of SMFINxxx DD cards in the CICS PA IN command.

As mentioned earlier, we decided to change the time interval for the report to 5 minutes. To do so, we manually changed the INTERVAL parameter of the report step.

Finally, we commented out the last line of the report step. The DD statement is there as reference for the container being used to print the report but is not required. We commented it out to avoid a JCL error in case the container would no longer exist.

The next day, when new SMF data sets became available, we submitted this job to produce a second report.

Example 19-4 Two step load and report job to be submitted from a private library

```
//CICSRS4L JOB (ACCOUNT),'NORBERT',MSGLEVEL=(1,1),NOTIFY=&SYSUID
/*JOBPARM SYSAFF=SC66
//* CICSPA V1R3 HDB LOAD JCL
//CICSPA   EXEC PGM=CPAMAIN
//STEPLIB  DD  DSN=CPA13.SCPALINK,
//             DISP=SHR
//CPAHDBRG DD  DSN=CICSRS4.CICSPA.HDB.DB2TREND,
//             DISP=SHR
//SYSPRINT DD  SYSOUT=*
//* SMF Input Files
//SMFIN001 DD DSN=SMFDATA.CICSRECS.G0449V00,
//            DISP=SHR
//SMFIN002 DD DSN=SMFDATA.CICSRECS.G0450V00,
//            DISP=SHR
//SMFIN003 DD DSN=SMFDATA.CICSRECS.G0451V00,
//            DISP=SHR
//SMFIN004 DD DSN=SMFDATA.CICSRECS.G0452V00,
//            DISP=SHR
```

```
//SMFIN005 DD DSN=SMFDATA.CICSRECS.G0453V00,
//            DISP=SHR
//* Command Input
//SYSIN DD *
* Report Set =DB2TRNDS
* Description=CICSPA HDB request
* Reports for Image=SC66
*             Description=System added by take-up
         CICSPA IN(SMFIN001,
                   SMFIN002,
                   SMFIN003,
                   SMFIN004,
                   SMFIN005),
                NOAPPLID,
                LINECNT(60),
                FORMAT(':','/'),
            HDB(OUTPUT(HDBL0001),LOAD(DB2TRNDS))
/*
//* CICSPA V1R3 HDB Report JCL
//CICSPA   EXEC PGM=CPAMAIN
//STEPLIB  DD DSN=CPA13.SCPALINK,
//            DISP=SHR
//CPAHDBRG DD DSN=CICSRS4.CICSPA.HDB.DB2TREND,
//            DISP=SHR
//SYSPRINT DD SYSOUT=*
//* Command Input
//SYSIN DD *
* Report Set =DB2TRNDS
* Description=CICSPA HDB request
         CICSPA NOAPPLID,
                LINECNT(60),
                FORMAT(':','/'),
            HDB(OUTPUT(HDBR0001),REPORT(DB2TRNDS),
                INTERVAL(00:05:00),
                FIELDS(START(TIMES),
                       APPLID,
                       TRAN,
                       TASKCNT,
                       RESPONSE(AVE),
                       DISPATCH(TIME(AVE)),
                       CPU(TIME(AVE)),
                       SUSPEND(TIME(AVE)),
                       L8CPU(TIME(AVE)),
                       DISPWAIT(TIME(AVE)),
                       DB2REQCT(AVE),
                       CHMODECT(AVE),
                       MAXOTDLY(TIME(AVE)),
                       RMIDB2(TIME(AVE))))
/*
//* HDB Container Data Sets. HDB Report processing does not require
//* these data sets to be included in the JCL as they are dynamically
//* allocated when required. They are included:
//* 1) for your reference
//* 2) to ensure that all required data sets are cataloged
//* 3) to allow DFHSM to recall required data sets up front
//*HDB00001 DD DISP=SHR,DSN=CICSRS4.DB2TRNDS.D03275.T155302.HDB
```

The HDB LOAD Recap Report in Figure 19-21 shows the new container data set name and the updated time range of the data.

```
V1R3M0                                                CICS Performance Analyzer
                                                         HDB LOAD Recap Report
                                                 ____________________________________________
HDBL0001 Printed at 15:09:27 10/03/2003    Data from 10:54:00 10/03/2003 to 10:59:00 10/03/2003                    Page       1


LOAD requested for HDB: DB2TRNDS  Register DSN: CICSRS4.CICSPA.HDB.DB2TREND

The following Container(s) were created and loaded:
  Container DSN: CICSRS4.DB2TRNDS.D03276.T150925.HDB           No of Records: 83
    Start Timestamp: 2003-10-03-10.54.00         End Timestamp: 2003-10-03-10.59.00

LOAD process complete.
```

Figure 19-21 HDB LOAD Recap Report from the second data load

Figure 19-22 shows the new report that is based on a reporting interval of five minutes.

```
V1R3M0                                                CICS Performance Analyzer
                                                     Historical Database Summary
                                                 ____________________________________________
HDBR0001 Printed at 16:46:25 10/03/2003     Data from 10:54:00 10/02/2003 to 10:59:00 10/03/2003                    Page       1


                                            Avg      Avg      Avg      Avg      Avg      Avg      Avg      Avg      Avg      Avg
Start            APPLID   Tran    Tasks Response Dispatch User CPU  Suspend   L8 CPU DispWait DB2 Reqs ChngMode MaxOTDly RMI DB2
Interval                                     Time     Time     Time     Time     Time     Time                              Time     Time
.
.

2003/10/02 10:55 SCSCPJA6 DB2N     6205    .0229    .0078    .0027    .0151    .0017    .0127       17       36    .0004    .0064
2003/10/02 10:55 SCSCPJA6 DB2R     7481    .0127    .0075    .0022    .0052    .0015    .0030       17        4    .0004    .0064
2003/10/02 10:55 SCSCPJA6 DB2U    35265    .0071    .0041    .0009    .0030    .0004    .0012        0        2    .0001    .0033
2003/10/02 10:55 SCSCPJA6         48951    .0100    .0051    .0013    .0048    .0008    .0029        5        7    .0002    .0042
2003/10/02 10:55 SCSCPJA7 DB2N     6284    .0226    .0079    .0026    .0147    .0017    .0126       17       36    .0002    .0064
2003/10/02 10:55 SCSCPJA7 DB2R     7504    .0124    .0075    .0022    .0048    .0015    .0030       17        4    .0001    .0064
2003/10/02 10:55 SCSCPJA7 DB2U    35067    .0069    .0041    .0009    .0028    .0004    .0012        0        2    .0001    .0033
2003/10/02 10:55 SCSCPJA7         48855    .0098    .0051    .0013    .0046    .0007    .0030        5        7    .0001    .0042
2003/10/02 10:55 SCSCPTA1 DB2N     6289    .0354    .0015    .0004    .0340    .0000    .0025        0        0    .0000    .0000
2003/10/02 10:55 SCSCPTA1 DB2R     7510    .0257    .0014    .0004    .0243    .0000    .0031        0        0    .0000    .0000
2003/10/02 10:55 SCSCPTA1 DB2U    35083    .0202    .0018    .0003    .0184    .0000    .0023        0        0    .0000    .0000
2003/10/02 10:55 SCSCPTA1         48882    .0230    .0017    .0003    .0213    .0000    .0025        0        0    .0000    .0000
2003/10/02 10:55 SCSCPTA2 DB2N     6206    .0351    .0014    .0003    .0337    .0000    .0023        0        0    .0000    .0000
2003/10/02 10:55 SCSCPTA2 DB2R     7482    .0256    .0014    .0004    .0241    .0000    .0030        0        0    .0000    .0000
2003/10/02 10:55 SCSCPTA2 DB2U    35283    .0204    .0018    .0003    .0185    .0000    .0024        0        0    .0000    .0000
2003/10/02 10:55 SCSCPTA2         48971    .0230    .0017    .0003    .0213    .0000    .0025        0        0    .0000    .0000
2003/10/02 10:55                 195659    .0164    .0034    .0008    .0130    .0004    .0027        3        3    .0001    .0021

.
.

2003/10/03 10:55 SCSCPJA6 DB2N     5819    .0243    .0093    .0027    .0150    .0018    .0126       17       36    .0003    .0078
2003/10/03 10:55 SCSCPJA6 DB2R     6991    .0139    .0086    .0022    .0052    .0016    .0031       17        4    .0002    .0075
2003/10/03 10:55 SCSCPJA6 DB2U    32380    .0078    .0048    .0009    .0030    .0004    .0013        0        2    .0001    .0040
2003/10/03 10:55 SCSCPJA6 DB2V     2281    .0147    .0103    .0013    .0044    .0009    .0024        1        4    .0002    .0097
2003/10/03 10:55 SCSCPJA6         47471    .0111    .0062    .0013    .0049    .0008    .0030        5        7    .0002    .0053
2003/10/03 10:55 SCSCPJA7 DB2N     5773    .0250    .0096    .0028    .0155    .0017    .0128       17       36    .0004    .0079
2003/10/03 10:55 SCSCPJA7 DB2R     6848    .0140    .0087    .0022    .0054    .0015    .0031       17        4    .0003    .0075
2003/10/03 10:55 SCSCPJA7 DB2U    32575    .0078    .0047    .0009    .0031    .0004    .0013        1        2    .0001    .0039
2003/10/03 10:55 SCSCPJA7 DB2V     2296    .0148    .0104    .0013    .0044    .0008    .0024        1        4    .0002    .0098
2003/10/03 10:55 SCSCPJA7         47492    .0112    .0062    .0014    .0050    .0008    .0030        5        7    .0002    .0052
2003/10/03 10:55 SCSCPTA1 DB2N     5771    .0388    .0014    .0004    .0373    .0000    .0025        0        0    .0000    .0000
2003/10/03 10:55 SCSCPTA1 DB2R     6851    .0287    .0015    .0004    .0272    .0000    .0036        0        0    .0000    .0000
2003/10/03 10:55 SCSCPTA1 DB2U    32577    .0220    .0019    .0004    .0201    .0000    .0025        0        0    .0000    .0000
2003/10/03 10:55 SCSCPTA1 DB2V     2296    .0301    .0013    .0003    .0288    .0000    .0030        0        0    .0000    .0000
2003/10/03 10:55 SCSCPTA1         47495    .0254    .0018    .0004    .0236    .0000    .0027        0        0    .0000    .0000
2003/10/03 10:55 SCSCPTA2 DB2N     5819    .0373    .0015    .0004    .0358    .0000    .0024        0        0    .0000    .0000
2003/10/03 10:55 SCSCPTA2 DB2R     6991    .0285    .0015    .0004    .0270    .0000    .0032        0        0    .0000    .0000
2003/10/03 10:55 SCSCPTA2 DB2U    32380    .0213    .0019    .0003    .0194    .0000    .0023        0        0    .0000    .0000
2003/10/03 10:55 SCSCPTA2 DB2V     2281    .0295    .0014    .0003    .0282    .0000    .0029        0        0    .0000    .0000
2003/10/03 10:55 SCSCPTA2         47471    .0247    .0018    .0004    .0229    .0000    .0025        0        0    .0000    .0000
2003/10/03 10:55                 189929    .0181    .0040    .0009    .0141    .0004    .0028        2        3    .0001    .0026
```

Figure 19-22 HDB report containing the second day

This report shows one total per transaction per CICS region. We see that a new transaction, DB2V, was added to the running set of applications. Looking at the summary records for DB2N, DB2R and DB2U, we see that the second set of data shows an increase in the average response and suspend time.

We used Lotus 1-2-3 to visualize these reports by means of some charts. The bars in the charts represent the results from our first and second run ordered by transaction ID. Knowing that TOR PTA1 is routing all transactions to AOR PJA7, the graph in Figure 19-23 shows that the increase in PTA1 came from an increase in PJA7.

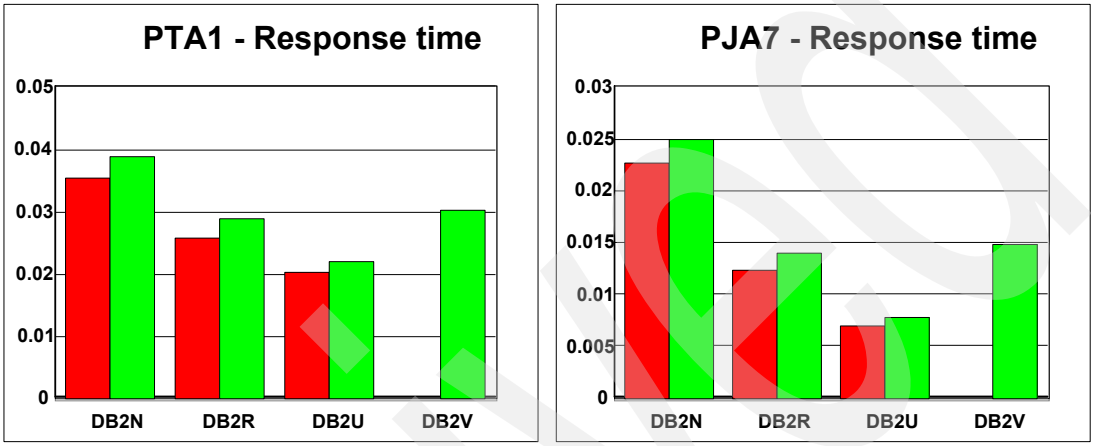

Figure 19-23 TOR PTA1 - AOR PJA7 response time comparison

Figure 19-24 shows that in PJA7 the dispatch time also increased for the three transactions. The CPU time only increased for DB2N. For the two other transactions, there is no difference. This comparison did not lead to a conclusion.

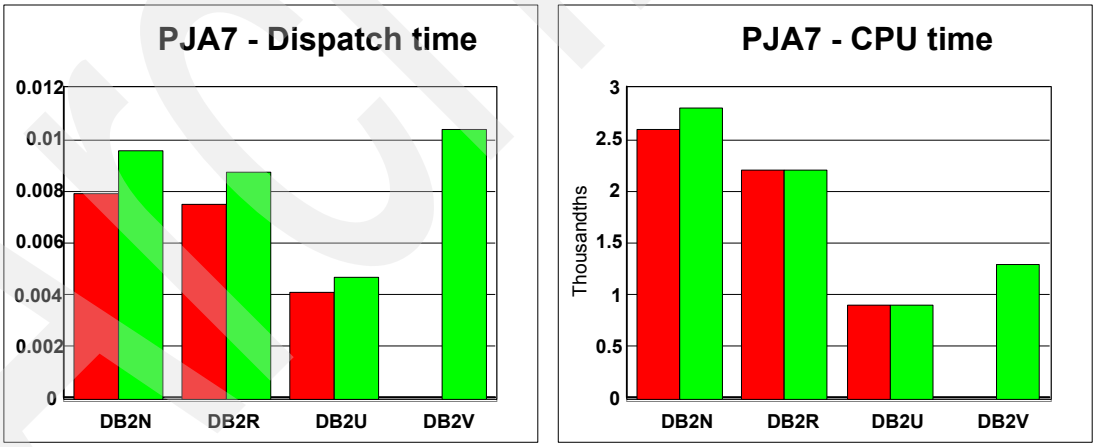

Figure 19-24 PJA7 Dispatch time and CPU time comparison

The new DB2 RMI time shown in Figure 19-25 shows that the increased elapsed time came from the longer time that we spent in the DB2 attachment.

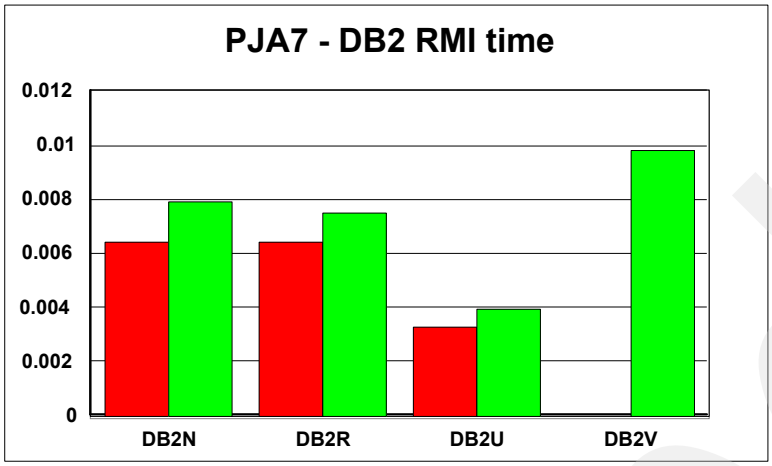

Figure 19-25 PJA7 - DB2 RMI time

In the first instance, we looked at the program that was added and executed by running the new DB2V transaction. This program contains an SQL update command followed by an EXEC CICS SUSPEND command. This program is defined with CONCURRENCY(QUASIRENT). The plan of the program is bound with RELEASE(COMMIT). This means that the SUSPEND command, although being a threadsafe command, runs under the QR TCB. The SQL update results in a DB2 update lock.

The result of the SUSPEND command is that control is passed to the dispatcher so that another task of higher or equal priority can process. When this is the case, DB2V remains suspended on the QR TCB while holding the DB2 update lock. This causes other transactions to remain suspended longer within DB2 until DB2V gets control again. After the SUSPEND, the program ends and the update lock is released. We removed the EXEC CICS SUSPEND command from the program code. A new set of data was collected from the available SMF records and was added to the HDB. The resulting report is shown in Figure 19-26 and Figure 19-27.

```
V1R3M0                                          CICS Performance Analyzer
                                              Historical Database Summary
                                         ____________________________________________
HDBR0001 Printed at 14:50:34 10/04/2003  Data from 10:54:00 10/02/2003 to 10:59:00 10/04/2003                    Page       1

                                          Avg      Avg      Avg      Avg      Avg      Avg      Avg      Avg      Avg      Avg
Start            APPLID   Tran    Tasks Response Dispatch User CPU  Suspend   L8 CPU DispWait DB2 Reqs ChngMode MaxOTDly RMI DB2
Interval                                   Time     Time     Time     Time     Time     Time                          Time     Time
.
.

2003/10/02 10:55 SCSCPJA6 DB2N     6205    .0229    .0078    .0027    .0151    .0017    .0127       17       36    .0004    .0064
2003/10/02 10:55 SCSCPJA6 DB2R     7481    .0127    .0075    .0022    .0052    .0015    .0030       17        4    .0004    .0064
2003/10/02 10:55 SCSCPJA6 DB2U    35265    .0071    .0041    .0009    .0030    .0004    .0012        0        2    .0001    .0033
2003/10/02 10:55 SCSCPJA6         48951    .0100    .0051    .0013    .0048    .0008    .0029        5        7    .0002    .0042
2003/10/02 10:55 SCSCPJA7 DB2N     6284    .0226    .0079    .0026    .0147    .0017    .0126       17       36    .0002    .0064
2003/10/02 10:55 SCSCPJA7 DB2R     7504    .0124    .0075    .0022    .0048    .0015    .0030       17        4    .0001    .0064
2003/10/02 10:55 SCSCPJA7 DB2U    35067    .0069    .0041    .0009    .0028    .0004    .0012        0        2    .0001    .0033
2003/10/02 10:55 SCSCPJA7         48855    .0098    .0051    .0013    .0046    .0007    .0030        5        7    .0001    .0042
2003/10/02 10:55 SCSCPTA1 DB2N     6289    .0354    .0015    .0004    .0340    .0000    .0025        0        0    .0000    .0000
2003/10/02 10:55 SCSCPTA1 DB2R     7510    .0257    .0014    .0004    .0243    .0000    .0031        0        0    .0000    .0000
2003/10/02 10:55 SCSCPTA1 DB2U    35083    .0202    .0018    .0003    .0184    .0000    .0023        0        0    .0000    .0000
2003/10/02 10:55 SCSCPTA1         48882    .0230    .0017    .0003    .0213    .0000    .0025        0        0    .0000    .0000
2003/10/02 10:55 SCSCPTA2 DB2N     6206    .0351    .0014    .0003    .0337    .0000    .0023        0        0    .0000    .0000
2003/10/02 10:55 SCSCPTA2 DB2R     7482    .0256    .0014    .0004    .0241    .0000    .0030        0        0    .0000    .0000
2003/10/02 10:55 SCSCPTA2 DB2U    35283    .0204    .0018    .0003    .0185    .0000    .0024        0        0    .0000    .0000
2003/10/02 10:55 SCSCPTA2         48971    .0230    .0017    .0003    .0213    .0000    .0025        0        0    .0000    .0000
2003/10/02 10:55                 195659    .0164    .0034    .0008    .0130    .0004    .0027        3        3    .0001    .0021
```

Figure 19-26 HDB report of third run (Part 1 of 2)

```
.
.

2003/10/03 10:55 SCSCPJA6 DB2N     5819    .0243    .0093    .0027    .0150    .0018    .0126       17       36    .0003    .0078
2003/10/03 10:55 SCSCPJA6 DB2R     6991    .0139    .0086    .0022    .0052    .0016    .0031       17        4    .0002    .0075
2003/10/03 10:55 SCSCPJA6 DB2U    32380    .0078    .0048    .0009    .0030    .0004    .0013        0        2    .0001    .0040
2003/10/03 10:55 SCSCPJA6 DB2V     2281    .0147    .0103    .0013    .0044    .0009    .0024        1        4    .0002    .0097
2003/10/03 10:55 SCSCPJA6         47471    .0111    .0062    .0013    .0049    .0008    .0030        5        7    .0002    .0053
2003/10/03 10:55 SCSCPJA7 DB2N     5773    .0250    .0096    .0028    .0155    .0017    .0128       17       36    .0004    .0079
2003/10/03 10:55 SCSCPJA7 DB2R     6848    .0140    .0087    .0022    .0054    .0015    .0031       17        4    .0003    .0075
2003/10/03 10:55 SCSCPJA7 DB2U    32575    .0078    .0047    .0009    .0031    .0004    .0013        1        2    .0001    .0039
2003/10/03 10:55 SCSCPJA7 DB2V     2296    .0148    .0104    .0013    .0044    .0008    .0024        1        4    .0002    .0098
2003/10/03 10:55 SCSCPJA7         47492    .0112    .0062    .0014    .0050    .0008    .0030        5        7    .0002    .0052
2003/10/03 10:55 SCSCPTA1 DB2N     5771    .0388    .0014    .0004    .0373    .0000    .0025        0        0    .0000    .0000
2003/10/03 10:55 SCSCPTA1 DB2R     6851    .0287    .0015    .0004    .0272    .0000    .0036        0        0    .0000    .0000
2003/10/03 10:55 SCSCPTA1 DB2U    32577    .0220    .0019    .0004    .0201    .0000    .0025        0        0    .0000    .0000
2003/10/03 10:55 SCSCPTA1 DB2V     2296    .0301    .0013    .0003    .0288    .0000    .0030        0        0    .0000    .0000
2003/10/03 10:55 SCSCPTA1         47495    .0254    .0018    .0004    .0236    .0000    .0027        0        0    .0000    .0000
2003/10/03 10:55 SCSCPTA2 DB2N     5819    .0373    .0015    .0004    .0358    .0000    .0024        0        0    .0000    .0000
2003/10/03 10:55 SCSCPTA2 DB2R     6991    .0285    .0015    .0004    .0270    .0000    .0032        0        0    .0000    .0000
2003/10/03 10:55 SCSCPTA2 DB2U    32380    .0213    .0019    .0003    .0194    .0000    .0023        0        0    .0000    .0000
2003/10/03 10:55 SCSCPTA2 DB2V     2281    .0295    .0014    .0003    .0282    .0000    .0029        0        0    .0000    .0000
2003/10/03 10:55 SCSCPTA2         47471    .0247    .0018    .0004    .0229    .0000    .0025        0        0    .0000    .0000
2003/10/03 10:55                 189929    .0181    .0040    .0009    .0141    .0004    .0028        2        3    .0001    .0026
V1R3M0                                                CICS Performance Analyzer
                                                     Historical Database Summary
                                         ____________________________________________
HDBR0001 Printed at 14:50:34 10/04/2003  Data from 10:54:00 10/02/2003 to 10:59:00 10/04/2003                    Page       1


                                            Avg      Avg      Avg      Avg      Avg      Avg      Avg      Avg      Avg      Avg
Start            APPLID   Tran    Tasks Response Dispatch User CPU  Suspend   L8 CPU DispWait DB2 Reqs ChngMode MaxOTDly RMI DB2
Interval                                     Time     Time     Time     Time     Time     Time                       Time     Time
2003/10/04 10:55 SCSCPJA6 DB2N     5799    .0224    .0081    .0027    .0142    .0017    .0119       17       36    .0003    .0067
2003/10/04 10:55 SCSCPJA6 DB2R     7094    .0125    .0075    .0022    .0050    .0016    .0029       17        4    .0003    .0064
2003/10/04 10:55 SCSCPJA6 DB2U    32458    .0072    .0041    .0009    .0031    .0004    .0013        1        2    .0002    .0033
2003/10/04 10:55 SCSCPJA6 DB2V     2311    .0126    .0082    .0012    .0044    .0008    .0022        1        4    .0005    .0075
2003/10/04 10:55 SCSCPJA6         47662    .0101    .0053    .0013    .0048    .0008    .0029        5        7    .0002    .0044
2003/10/04 10:55 SCSCPJA7 DB2N     5752    .0221    .0085    .0026    .0136    .0017    .0116       17       36    .0002    .0071
2003/10/04 10:55 SCSCPJA7 DB2R     6940    .0123    .0079    .0022    .0044    .0015    .0028       17        4    .0002    .0067
2003/10/04 10:55 SCSCPJA7 DB2U    32768    .0069    .0042    .0009    .0028    .0004    .0012        1        2    .0001    .0034
2003/10/04 10:55 SCSCPJA7 DB2V     2334    .0125    .0085    .0013    .0039    .0008    .0021        1        4    .0002    .0080
2003/10/04 10:55 SCSCPJA7         47794    .0098    .0054    .0013    .0044    .0007    .0027        5        6    .0002    .0045
2003/10/04 10:55 SCSCPTA1 DB2N     5749    .0342    .0014    .0004    .0327    .0000    .0020        0        0    .0000    .0000
2003/10/04 10:55 SCSCPTA1 DB2R     6939    .0247    .0015    .0004    .0232    .0000    .0028        0        0    .0000    .0000
2003/10/04 10:55 SCSCPTA1 DB2U    32765    .0191    .0018    .0003    .0173    .0000    .0021        0        0    .0000    .0000
2003/10/04 10:55 SCSCPTA1 DB2V     2334    .0242    .0012    .0003    .0229    .0000    .0019        0        0    .0000    .0000
2003/10/04 10:55 SCSCPTA1         47787    .0220    .0017    .0003    .0203    .0000    .0022        0        0    .0000    .0000
2003/10/04 10:55 SCSCPTA2 DB2N     5798    .0339    .0014    .0003    .0325    .0000    .0020        0        0    .0000    .0000
2003/10/04 10:55 SCSCPTA2 DB2R     7092    .0248    .0015    .0004    .0233    .0000    .0026        0        0    .0000    .0000
2003/10/04 10:55 SCSCPTA2 DB2U    32454    .0199    .0018    .0003    .0181    .0000    .0022        0        0    .0000    .0000
2003/10/04 10:55 SCSCPTA2 DB2V     2313    .0257    .0014    .0003    .0243    .0000    .0021        0        0    .0000    .0000
2003/10/04 10:55 SCSCPTA2         47657    .0226    .0017    .0003    .0210    .0000    .0022        0        0    .0000    .0000
2003/10/04 10:55                 190900    .0161    .0035    .0008    .0126    .0004    .0025        2        3    .0001    .0022
```

Figure 19-27 HDB report of third run (Part 1 of 2)

The report shows that the transaction suspend times are again down to their normal values. The graphs in Figure 19-28 through Figure 19-30 on page 436 give a more visual representation that we returned to the situation from before the DB2V transaction was added and that the DB2V, after correction, has much less influence on the other transactions.

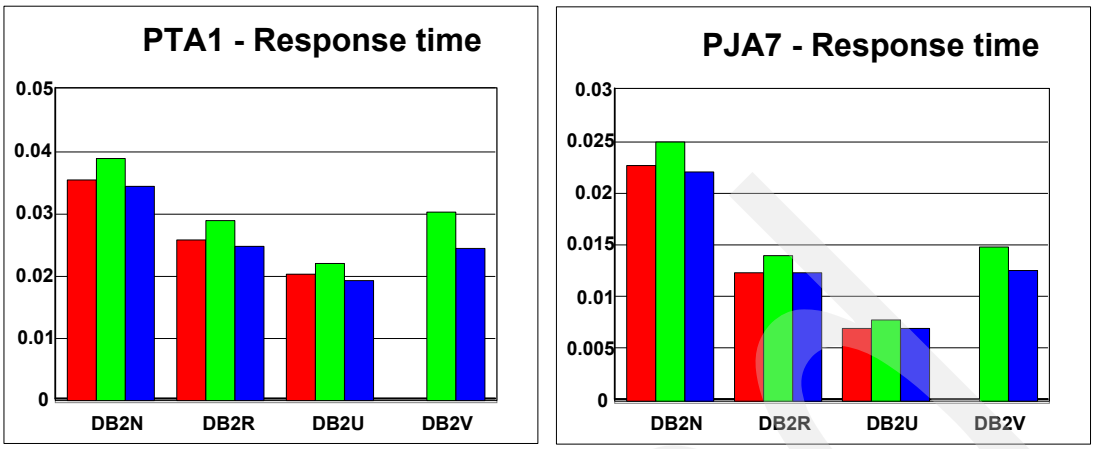

Figure 19-28 PTA1-PJA7 response times after DB2V correction

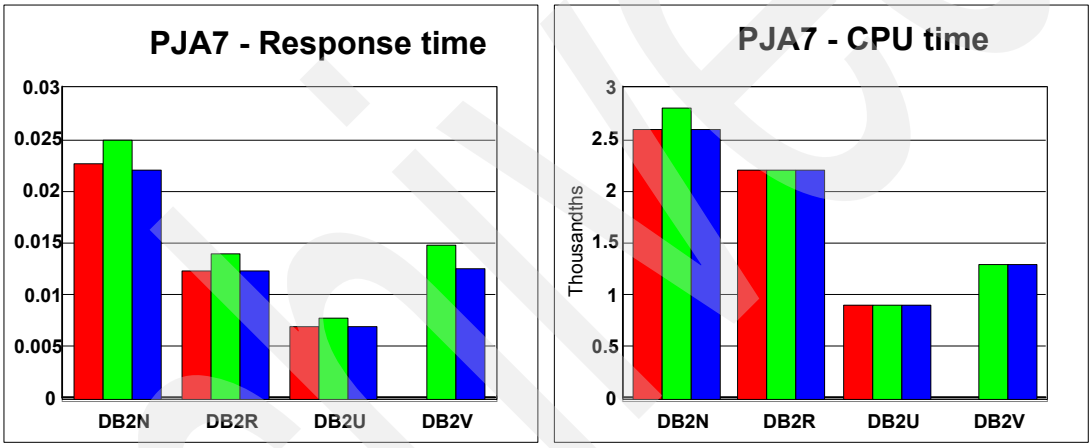

Figure 19-29 PJA7 response and CPU times after DB2V correction

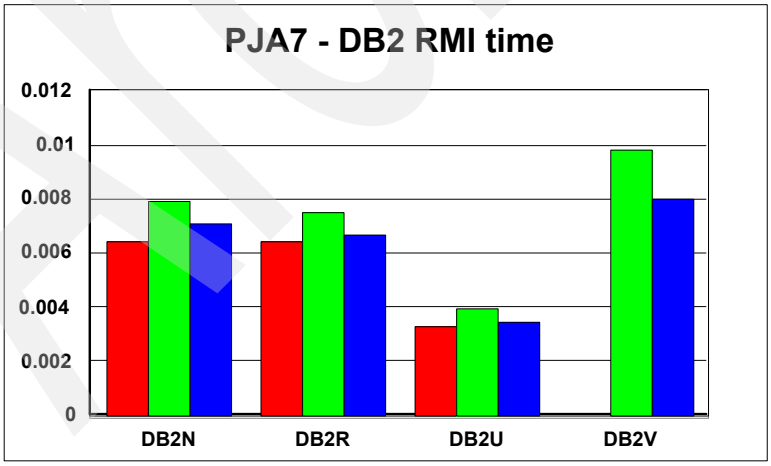

Figure 19-30 PJA7 - DB2 RMI time after DB2V correction

19.4.2 List HDB

The usage of a list HDB is similar to using performance list reports. The records that are written to the HDB represent single transaction records. The selected fields of each CMF performance record are copied as one record in the HDB. This way large amounts of data can be copied to the HDB. Thus the list HDB is considered to have a short life span and should be used for detailed analysis of recent transaction events.

The creation of templates, the definition of the HDB, and loading and reporting a list HDBs are similar to the usage of the summary HDB. We show the usage of a list HDB in 19.4.5, “Export HDB data sets to DB2” on page 441.

19.4.3 HDB maintenance

HDB maintenance allows you to change the options or to flag containers from the HDB as deleted. We entered option 5 to enter the HDB maintenance option. Then, we were presented the list of the HDBs. Figure 19-31 shows that we selected the DB2TRNDS HDB.

```
  File  Options  Help
--------------------------------------------------------------------------------
                              HDB Maintenance                Row 1 to 2 of 2
Command ===>                                               Scroll ===> CSR

Select to maintain HDB definition and its data sets.

/  Name     Type              Description                Changed        ID
  DB2TRNDL LIST     DB2trndl HDB                    2003/09/27 15:07 CICSRS4
s DB2TRNDS SUMMARY  DB2trnds HDB                    2003/09/29 11:24 CICSRS4
******************************** End of list ********************************
```

Figure 19-31 HDB maintenance HDB definitions list

We selected an HDB and then had two view options. First is the Maintain options view where you can alter the options of the HDB (Figure 19-32).

```
  File  Systems  Options  Help
--------------------------------------------------------------------------------
                                Maintain HDB                        More: >
Command ===>

Review and update HDB definition options then press EXIT to save.

Name . . . . . : DB2TRNDS Type SUMMARY  APPLID          +  Image
Description  . . DB2TREND HDB

Specify View . . 1  1. Options  2. Data Sets
                                                                 More:     +
HDB Format:                             Selection Criteria:
 Template  . . . DB2TRNDS  +                Performance

Data Retention Period:
 Years . .      Months . .      Weeks . . 1    Days . .      Hours . .

Data Set Allocation Settings:
 DSN Prefix . . . . . . CICSRS4
 Management class . . .             (Blank for default management class)
 Storage class  . . . .             (Blank for default storage class)
  Volume serial . . . .             (Blank for system default volume)
  Device type . . . . .             (Generic unit or device address)
 Data class . . . . . .             (Blank for default data class)
  Space Units . . . . . CYLS        (TRKS, CYLS)
  Primary quantity  . . 10          (In above units)
  Secondary quantity    5           (In above units)
```

Figure 19-32 HDB Maintenance: Options view

Second is the Maintain data sets view. You can request to have this view by changing the Specify View value or by pressing F11, which allows you to switch between the two views. Figure 19-33 shows the list of allocated containers in the HDB. It shows that the first container is expired.

```
  File  Systems  Options  Help
--------------------------------------------------------------------------------
                                Maintain HDB               Row 1 of 4 More: >
Command ===>                                                 Scroll ===> CSR

Maintain HDB data sets.

Name . . . . . : DB2TRNDS Type SUMMARY  APPLID          +  Image
Description  . . DB2TREND HDB

Specify View . . 2  1. Options  2. Data Sets

/  Data Set Name                                      Start         Volume
   CICSRS4.DB2TRNDS.D03265.T121845.HDB         2003/09/19 10:54:00  *EXPIRE
   CICSRS4.DB2TRNDS.D03267.T111310.HDB         2003/09/24 10:54:00  TOTSTH
s  CICSRS4.DB2TRNDS.D03270.T120538.HDB         2003/09/27 10:55:00  TOTTSW
   CICSRS4.DB2TRNDS.D03272.T112941.HDB         2003/09/29 10:55:00  TOTTSU
********************************* End of list *********************************
```

Figure 19-33 HDB Maintenance: Data Sets view

We selected the third container to see additional details about the container itself and about the data that is available in it. Figure 19-34 shows this detail.

```
---------------------------- Maintain HDB -----------------------------
                             HDB Data Set
 Command ===>

 Data Set Name  . . : CICSRS4.DB2TRNDS.D03270.T120538.HDB
 VOLSER . . . . . . : TOTTSW

 Status . . . . . . : Active
 Creation Date  . . : 2003/09/27 12:05:39
 Expiry Date  . . . : 2003/10/04 16:05:39

 Data Start . . . . : 2003/09/27 10:55:00
 Data End . . . . . : 2003/09/27 10:59:00
 Record Count . . . : 80
```

Figure 19-34 HDB Maintenance: Container details

We pressed F3 to return to the previous screen where we entered a `D` in front of the container name to flag it as deleted. Figure 19-35 shows the deleted status of the selected container. You can undo this status by typing line action `U` next to the container name. Undo is available until you run housekeeping.

```
   File  Systems  Options  Help
 ------------------------------------------------------------------------------
                                 Maintain HDB              Row 1 of 4 More: >
 Command ===>                                                Scroll ===> CSR

 Maintain HDB data sets.

 Name . . . . . : DB2TRNDS Type SUMMARY  APPLID           +  Image
 Description  . . DB2TREND HDB

 Specify View . . 2  1. Options  2. Data Sets

 /  Data Set Name                                      Start         Volume
    CICSRS4.DB2TRNDS.D03265.T121845.HDB          2003/09/19 10:54:00  *EXPIRE
    CICSRS4.DB2TRNDS.D03267.T111310.HDB          2003/09/24 10:54:00  TOTSTH
    CICSRS4.DB2TRNDS.D03270.T120538.HDB          2003/09/27 10:55:00  *DELETE
    CICSRS4.DB2TRNDS.D03272.T112941.HDB          2003/09/29 10:55:00  TOTTSU
 ********************************** End of list ********************************
```

Figure 19-35 HDB Maintenance: An expired and deleted container

19.4.4 HDB housekeeping

HDB housekeeping allows you to generate JCL to physically delete the containers that are flagged as expired or deleted. It also allows you to generate JCL for doing an IDCAMS VERIFY on a broken HDB register KSDS. This can be required if you receive message IEC161I after a failed HDB dialog or batch request.

When we selected housekeeping, the screen shown in Figure 19-36 is displayed.

```
-----------------------------------------------------------------
                        HDB Housekeeping
 Command ===>

 Register . . : CICSRS4.CICSPA.HDB.DB2TRND

 Select one of the following options
 1  1. Submit HDB Housekeeping JCL
    2. Repair HDB Register using VERIFY command

 Enter "/" to select option
 /  Edit JCL before submit
```

Figure 19-36 HDB Housekeeping options

Figure 19-35 shows an expired and a deleted container. To physically delete them, we selected option 1 on the HDB Housekeeping screen to run the HDB housekeeping job. Example 19-5 shows the two step JCL that was submitted.

Example 19-5 HDB housekeeping JCL

```
//         JOB
//* CICSPA V1R3 HDB HOUSEKEEPING JCL
//HKEEP    EXEC PGM=CPAMAIN
//STEPLIB  DD  DSN=CPA13.SCPALINK,
//             DISP=SHR
//CPAHDBRG DD  DSN=CICSRS4.CICSPA.HDB.DB2TRND,
//             DISP=SHR
//SYSPRINT DD  SYSOUT=*
//SYSIN    DD  *
   CICSPA HDB(HKEEP)
/*
//CPAHKDEL DD  DSN=&CPAHKDEL,DISP=(NEW,PASS),
//         SPACE=(CYL,(1,1))
//*
//DELETE EXEC PGM=IDCAMS,COND=(0,NE,HKEEP)
//SYSPRINT DD  SYSOUT=*
//SYSIN    DD  DSN=&CPAHKDEL,DISP=(OLD,DELETE)
```

Figure 19-37 shows the output of the two steps of the HDB housekeeping job. It also shows that the DB2TRNDL HDB had two expired containers. This job should be submitted periodically to physically delete the expired containers.

```
 V1R3M0                                                CICS Performance Analyzer
                                                        HDB Housekeeping Report
                                                 ____________________________________________
Housekeeping is being performed against HDB Register CICSRS4.CICSPA.HDB.DB2TRND                          Page       1


The following Containers were deleted from the Register:
  Container DSN: CICSRS4.DB2TRNDL.D03270.T150745.HDB          Reason: Expired   No of Records: 94,200
    Created: 2003-09-27-15.10.47.236842  ;  Record Range is from 2003-09-27-10.53.18.779172  to  2003-09-27-10.59.36.543344
  Container DSN: CICSRS4.DB2TRNDL.D03270.T150927.HDB          Reason: Expired   No of Records: 72,468
    Created: 2003-09-27-15.10.47.236842  ;  Record Range is from 2003-09-27-10.55.18.784232  to  2003-09-27-10.59.59.977244
  Container DSN: CICSRS4.DB2TRNDS.D03265.T121845.HDB          Reason: Expired   No of Records: 61
    Created: 2003-09-22-12.18.46.000000  ;  Record Range is from 2003-09-19-10.54.00.000000  to  2003-09-19-10.59.00.000000
  Container DSN: CICSRS4.DB2TRNDS.D03270.T120538.HDB          Reason: Deleted   No of Records: 80
    Created: 2003-09-27-12.05.39.000000  ;  Record Range is from 2003-09-27-10.55.00.000000  to  2003-09-27-10.59.00.000000

Housekeeping process complete.


IDCAMS  SYSTEM SERVICES                                        TIME: 19:49:25        09/29/03     PAGE      1

  DELETE  CICSRS4.DB2TRNDL.D03270.T150745.HDB
IDC0550I ENTRY (A) CICSRS4.DB2TRNDL.D03270.T150745.HDB DELETED
IDC0001I FUNCTION COMPLETED, HIGHEST CONDITION CODE WAS 0

  DELETE  CICSRS4.DB2TRNDL.D03270.T150927.HDB
IDC0550I ENTRY (A) CICSRS4.DB2TRNDL.D03270.T150927.HDB DELETED
IDC0001I FUNCTION COMPLETED, HIGHEST CONDITION CODE WAS 0

  DELETE  CICSRS4.DB2TRNDS.D03265.T121845.HDB
IDC0550I ENTRY (A) CICSRS4.DB2TRNDS.D03265.T121845.HDB DELETED
IDC0001I FUNCTION COMPLETED, HIGHEST CONDITION CODE WAS 0

  DELETE  CICSRS4.DB2TRNDS.D03270.T120538.HDB
IDC0550I ENTRY (A) CICSRS4.DB2TRNDS.D03270.T120538.HDB DELETED
IDC0001I FUNCTION COMPLETED, HIGHEST CONDITION CODE WAS 0

IDC0002I IDCAMS PROCESSING COMPLETE. MAXIMUM CONDITION CODE WAS 0
```

Figure 19-37 HDB housekeeping output

We selected option 2 on the HDB Housekeeping menu for the Repair HDB Register using the VERIFY command. No job was submitted but the VERIFY command was executed dynamically. The result is shown on the Historical Database Menu (Figure 19-38).

```
  File  Options  Help
 ------------------------------------------------------------------------------
                          Historical Database Menu          VERIFY successful
 Option ===>

 1  Templates         Design HDB Templates
 2  Define            Define a new HDB
 3  Load              Load data into the HDBs
 4  Report            Submit HDB report requests
 5  Export            Export HDB data sets to DB2
 6  Maintenance       Maintain HDB definitions and data sets
 7  Housekeeping      Perform HDB housekeeping

 HDB Register . . . 'CICSRS4.CICSPA.HDB.DB2TRND'                    +
```

Figure 19-38 Execution result of the VERIFY command

19.4.5 Export HDB data sets to DB2

To perform more extended analysis on SMF data, you may try loading SMF data into DB2 tables. The Export function of the Historical Database Manager allows you in an easy way to

generate the required jobs to create the DDL to define a DB2 table and a job to load the data into this table.

We show you how we used a list HDB to load a DB2 table. Since it is very to create the required jobs to define a table and load a DB2 table, it is easier to work with small tables that contain only the data that you require. However, to understand our storage requirements, we decided to create a table with all available columns.

First we created a list template with name DB2ALL. On the Historical Database Menu, we selected option `1` to enter the templates option. We entered the `NEW` command and then entered the name of the template that we wanted to create. A pop-up screen appeared where we selected to have a list template. Figure 19-39 shows that we selected all fields to be included in the template by moving the End of HDB marker to the last line of all selectable fields.

```
  File  Edit  Confirm  Upgrade  Options  Help
--------------------------------------------------------------------------------
                        EDIT List Template - DB2ALL      Row 250 of 262 More: >
Command ===>                                                  Scroll ===> CSR

Description  . . . List HDB Template                 Version (VRM): 620

Selection Criteria:
    Performance

     Field
/    Name +    K  Description
     WAITEXT      External ECB wait time
     WBBROWSE     Web Browse requests
     WBCHRIN      Web characters received count
     WBCHROUT     Web characters sent count
     WBEXTRCT     Web EXTRACT requests
     WBRCV        Web RECEIVE requests
     WBREAD       Web READ requests
     WBREPRCT     Shared TS Repository read requests
     WBREPWCT     Shared TS Repository write requests
     WBSEND       Web SEND requests
     WBTOTAL      Web Total requests
     WBWRITE      Web WRITE requests
     EOD          ---------------- End of HDB -----------------
```

Figure 19-39 HDB template with all fields selected

Then, on the main menu, we selected option `2` to define the HDB. Figure 19-40 shows the HDB definition panel with the options we specified. This HDB is only used briefly so we specified a retention period of one day. We specified a specific volume serial because we were sure there was enough space available on that volume. For primary space allocation, we specified 30 cylinders. The secondary allocation was set to 5.

```
  File  Systems  Options  Help
--------------------------------------------------------------------------------
                              New HDB Definition
Command ===>

Specify new HDB definition options then press EXIT to save.

Name . . . . . . DB2ALL    APPLID           +  Image
Description  . . HDB containing all SMF fields

HDB Format:                              Selection Criteria:
 Template  . . . DB2ALL    +                Performance

Data Retention Period:
 Years . .      Months . .      Weeks . .      Days . . 1    Hours . .

Data Set Allocation Settings:
 DSN Prefix . . . . . . CICSRS4
 Management class . . .             (Blank for default management class)
 Storage class  . . . .             (Blank for default storage class)
  Volume serial . . . . TOTPB8      (Blank for system default volume)
  Device type . . . . .             (Generic unit or device address)
 Data class . . . . . .             (Blank for default data class)
  Space Units . . . . . CYLS        (TRKS, CYLS)
  Primary quantity  . . 30          (In above units)
  Secondary quantity    5           (In above units)
```

Figure 19-40 DB2ALL HDB definition

Next we loaded the data into the HDB. We selected the load option 3 and selected the just created DB2ALL HDB. Figure 19-41 shows that we selected to have only the SMF records for APPLID SCSCPJA7. We pressed Enter to preview the JCL which we then submitted.

```
  File  Systems  Options  Help
-----------------------------------------------------------------------------
                        Load LIST HDB DB2ALL
Command ===>

Specify HDB load options then press Enter to continue submit.

                                       ----- Report Interval ------
System Selection:                           MM/DD/YYYY  HH:MM:SS.TH
 APPLID . . SCSCPJA7  +                 From
 Image  . . SC66      +                 To
 Group  . .           +

Enter "/" to select option
/  Edit JCL before submit
```

Figure 19-41 DB2ALL HDB load options

Figure 19-42 shows part of the job log and the recap report of the load job. The abend B37 indicates that the storage space allocation for the data container was too small. This did not cause a problem for us. When CICS PA detects an abend x37, it closes the file and continues loading data in a new allocated container. This job had an abend B37 resulting in two containers being allocated for holding all of the data. The fact of having two containers

instead of one is transparent to the report function but not to the export function that can export only one container at a time.

```
.
.
IEF403I CICSRS4L - STARTED - TIME=15.53.35 - ASID=0028 - SC66
IEC030I B37-04,IFG0554A,CICSRS4L,CICSPA,SYS00001,3B40,TOTPB8,CICSRS4.DB2ALL.D03281.T155336.HDB
.
.
 V1R3M0                                                CICS Performance Analyzer
                                                         HDB LOAD Recap Report
                                                 ____________________________________________
HDBL0001 Printed at 15:56:16 10/08/2003    Data from 18:54:35 10/06/2003 to 19:00:59 10/06/2003                    Page       1


LOAD requested for HDB: DB2ALL    Register DSN: CICSRS4.CICSPA.HDB.DB2TREND

The following Container(s) were created and loaded:
  Container DSN: CICSRS4.DB2ALL.D03281.T155336.HDB             No of Records: 47,250
    Start Timestamp: 2003-10-06-18.54.35.608548  End Timestamp: 2003-10-06-18.59.38.569366
  Container DSN: CICSRS4.DB2ALL.D03281.T155543.HDB             No of Records: 12,706
    Start Timestamp: 2003-10-06-18.59.35.587090  End Timestamp: 2003-10-06-19.00.59.947900

LOAD process complete.
```

Figure 19-42 Job log and Load recap Report showing an abend B37

We returned to the main HDB menu and selected option 5 to create the jobs for loading the container data into a DB2 table. We selected our DB2ALL HDB and were presented the screen as shown in Figure 19-43. We selected the first container and pressed Enter.

```
  File  Options  Help
 ------------------------------------------------------------------------------
                                  Export HDB                  Row 1 to 2 of 2
 Command ===>                                               Scroll ===> CSR

 Export HDB data set.

 Name . . : DB2ALL

    Data Set Name                                     Start         Volume
 s  CICSRS4.DB2ALL.D03281.T155336.HDB            2003/10/06 18:54:35  TOTPB8
    CICSRS4.DB2ALL.D03281.T155543.HDB            2003/10/06 18:59:35  TOTPB8
 ********************************* End of list *********************************
```

Figure 19-43 Available containers for DB2ALL Export HDB function

Figure 19-44 shows the screen that we received with the selected container name. This screen is used twice. First we selected option 1 to create the DDL to define the DB2 table.

Next for the required information about the DB2 system that we were going to use, we entered CPA13 as the name of the DB2 database that has to be created to contain our DB2 table. We did not enter a VCAT value because we decided to use the default storage group, SYSDEFLT. We also entered the primary and secondary allocation units for the DB2 tablespace.

Finally, we chose to have both time and count values for the timer fields. A CMF performance class clock field consists of a timer value and a count value. The timer value represents the total time value as it was accumulated during one or more measurement periods. The count value gives the number of these different periods. We did not select the Include Sums of Squares option since this does not apply to a list HDB.

```
  File  Options  Help
 ------------------------------------------------------------------------------
                              Export HDB Data Set                  Top of data
 Command ===>

 HDB Name  . . . : DB2ALL
 Data Set Name . : CICSRS4.DB2ALL.D03281.T155336.HDB
                                                                   More:     +
 Select option
 1  1. Create DDL to define table        2. Load data into table

 Create Options                          Load Options
 /  Create Database                      1  1. Resume
    Create Storage Group                    2. Replace

 DB2 Settings:
  DB2 Subsystem ID . . . D7Q2
  DSNTIAD Plan Name  . . DSNTIA71
  DB2 Load Library . . . 'DB7Q7.SDSNLOAD'
  DB2 Exit Library . . . 'DB7Q7.SDSNEXIT'
  DB2 RUNLIB Library . . 'DB7QU.RUNLIB.LOAD'
  Database . . . . . . . CPA13     Storage Group  . . SYSDEFLT
  VCAT Catalog name  . .           Volume . . . . . . TOTDCT
  Allocation: Primary    5000      Secondary  . . . . 500

 Include Clock Field Components          Summary Options
 1  1. Time and Count                       Include Sums of Squares
    2. Time only
    3. Count only
```

Figure 19-44 DB2 options for generating the DDL to create a DB2 table

Example 19-6 shows the job that was generated. We recognized our parameters in the CREATE DATABASE, TABLESPACE, and TABLE commands. For a typical field, such as CPU time, we saw that two columns are included: CPU_TIME and CPU_COUNT. At the end of the job, we noticed also that an index is built for the table.

Example 19-6 DB2 DDL for creating a table to load HDB data into

```
//         JOB
/*JOBPARM SYSAFF=SC66
//* CICSPA V1R3 HDB - DDL TO DEFINE DB2 TABLE
//RUNTIAD EXEC PGM=IKJEFT01,DYNAMNBR=20
//STEPLIB  DD DISP=SHR,DSN=DB7Q7.SDSNLOAD
//         DD DISP=SHR,DSN=DB7Q7.SDSNEXIT
//SYSTSPRT DD SYSOUT=*
//SYSTSIN  DD *
 DSN SYSTEM(D7Q2)
 RUN PROGRAM(DSNTIAD) -
     LIB('DB7QU.RUNLIB.LOAD') PLAN(DSNTIA71)
/*
//SYSPRINT DD SYSOUT=*
//SYSUDUMP DD SYSOUT=*
//SYSIN    DD *
   CREATE DATABASE CPA13;

   COMMIT;
```

```
CREATE TABLESPACE DB2ALL
       IN         CPA13
      LOCKSIZE   ANY
      BUFFERPOOL BP0
      CLOSE      NO
      SEGSIZE    32
      USING      STOGROUP SYSDEFLT
      PRIQTY     5000
      SECQTY     500
      ERASE      NO ;

CREATE TABLE CPA13.DB2ALL (
   START                TIMESTAMP,
   TMVSID                CHAR(4),
   APPLID               CHAR(8),
   TRAN                 CHAR(4),
   USERID               CHAR(8),
   PROGRAM              CHAR(8),
   TASKNO               INTEGER,
   RESPONSE_TIME        FLOAT,
   DISPATCH_TIME        FLOAT,
   DISPATCH_COUNT       INTEGER,
   CPU_TIME             FLOAT,
   CPU_COUNT            INTEGER,
   SUSPEND_TIME         FLOAT,
   SUSPEND_COUNT        INTEGER,
   DISPWAIT_TIME        FLOAT,
   DISPWAIT_COUNT       INTEGER,
   FCWAIT_TIME          FLOAT,
   FCWAIT_COUNT         INTEGER,
.
.
.
   WBTOTAL              INTEGER,
   WBWRITE              INTEGER
) IN CPA13.DB2ALL;

CREATE TYPE 2 UNIQUE INDEX CPA13.DB2ALL_IX
      ON CPA13.DB2ALL
     (
     START,
     MVSID,
     APPLID,
     TRAN,
     USERID,
     PROGRAM
     )
   USING STOGROUP   SYSDEFLT
         PRIQTY     10
         SECQTY     10
         ERASE      NO
         CLUSTER
         BUFFERPOOL BP0
         CLOSE      NO
;
```

We submitted this job and returned to the Export screen (Figure 19-44). We then chose option 2 to generate the job for loading the data into the newly created table. Example 19-7 shows the generated JCL and the first lines of the LOAD commands.

Example 19-7 Generated job for loading the HDB data into the generated DB2 table

```
//CICSRS4 JOB (ACCOUNT),'NORBERT',MSGLEVEL=(1,1),NOTIFY=&SYSUID
/*JOBPARM SYSAFF=SC66
//* CICSPA V1R3 HDB - LOAD DATA INTO DB2 TABLE
//DSNUPROC EXEC PGM=DSNUTILB,REGION=0M,
//         PARM='D7Q2'
//STEPLIB  DD  DISP=SHR,DSN=DB7Q7.SDSNLOAD
//         DD  DISP=SHR,DSN=DB7Q7.SDSNEXIT
//SYSPRINT DD  SYSOUT=*
//UTPRINT  DD  SYSOUT=*
//SYSUDUMP DD  SYSOUT=*
//SYSREC   DD  DSN=CICSRS4.DB2ALL.D03281.T155543.HDB,
//             DISP=SHR
//SYSUT1   DD  UNIT=SYSDA,SPACE=(4000,(20,20),,,ROUND)
//SORTOUT  DD  UNIT=SYSDA,SPACE=(4000,(20,20),,,ROUND)
//SYSIN    DD  *
LOAD DATA RESUME YES
     INTO TABLE CPA13.DB2ALL (
      START                POSITION(1)     TIMESTAMP EXTERNAL(26),
      MVSID                POSITION(27)    CHAR(4),
      APPLID               POSITION(31)    CHAR(8),
      TRAN                 POSITION(39)    CHAR(4),
. . .
```

We modified the SYSREC DD statement to concatenate the second container that was created when the data was loaded to the HDB.

Attention: Be careful when concatenating the container data sets as described here. Ensure that the template has not changed between times.

We submitted the job with the concatenated containers but received a DB2 abend S04E. Figure 19-45 shows the error messages. Reason code 00D70014 indicates the failure of an attempt to extend the tablespace.

```
DSNU398I  -D7Q2 DSNURWBF - UNEXPECTED PROCESSING ERROR, REASON=X'00E40318' ON TABLE - CPA13.DB2ALL
DSNT500I    DSNUGBAC - RESOURCE UNAVAILABLE
                       REASON 00D70014
                       TYPE 00000220
                       NAME DB7QU.DSNDBC.CPA13.DB2ALL.I0001.A001
DSNU017I    DSNUGBAC - UTILITY DATA BASE SERVICES MEMORY EXECUTION ABENDED, REASON=X'00E40318'
```

Figure 19-45 DB2 error messages from the DB2 load job

At this time, we were not able to perform any action on the DB2 resources because the DB2 load utility was still in progress. We entered the DB2I interface in TSO as shown in Figure 19-46 to determine the exact status of the load utility and to take an appropriate action to remove this status. We selected option 7 to enter the DB2 commands option.

```
                              DB2I PRIMARY OPTION MENU          SSID: D7Q2
 COMMAND ===> 7

 Select one of the following DB2 functions and press ENTER.

  1  SPUFI                   (Process SQL statements)
  2  DCLGEN                  (Generate SQL and source language declarations)
  3  PROGRAM PREPARATION     (Prepare a DB2 application program to run)
  4  PRECOMPILE              (Invoke DB2 precompiler)
  5  BIND/REBIND/FREE        (BIND, REBIND, or FREE plans or packages)
  6  RUN                     (RUN an SQL program)
  7  DB2 COMMANDS            (Issue DB2 commands)
  8  UTILITIES               (Invoke DB2 utilities)
  D  DB2I DEFAULTS           (Set global parameters)
  X  EXIT                    (Leave DB2I)
```

Figure 19-46 DB2I Primary Option Menu: selecting DB2 Commands

We entered the `DISPLAY UTILITY` command to check the status of our load job.

```
 DB2 COMMANDS                    SSID: D7Q2
  ===>

  Position cursor on the command line you want to execute and press ENTER

  Cmd 1 ===> -DIS UTIL(*)
  Cmd 2 ===>
  Cmd 3 ===>
        ...>
  Cmd 4 ===>
        ...>
```

Figure 19-47 DB2 Commands: DISPLAY UTILITY

Example 19-8 shows the reply of the DISPLAY command.

Example 19-8 Output of the DISPLAY UTILITY command

```
DSNU100I  -D7Q2 DSNUGDIS - USERID = CICSRS4
                MEMBER = D7Q2
                UTILID = CICSRS4.CICSRS4L
                PROCESSING UTILITY STATEMENT 1
                UTILITY = LOAD
                PHASE = RELOAD   COUNT = 0
                NUMBER OF OBJECTS IN LIST = 1
                LAST OBJECT STARTED = 1
                STATUS = STOPPED
DSN9022I  -D7Q2 DSNUGCCC '-DIS UTIL' NORMAL COMPLETION
```

The utility output shows that our load utility is in stopped status. We copied the UTILID value and used it in the second DB2 command that is shown in Figure 19-48. With the cursor on the second command line, we pressed Enter to run the TERMINATE command.

```
DB2 COMMANDS                    SSID: D7Q2
 ===>
 DSNE294I SYSTEM RETCODE=000      USER OR DSN RETCODE=0
 Position cursor on the command line you want to execute and press ENTER

 Cmd 1 ===> -DIS UTIL(*)
 Cmd 2 ===> -TERM UTIL(CICSRS4.CICSRS4L)
 Cmd 3 ===>
       ...>
 Cmd 4 ===>
       ...>
```

Figure 19-48 DB2 commands: TERMINATE the load utility

Figure 19-49 shows the output of the TERMINATE command.

```
DSNU166I  -D7Q2 DSNUGTER - LOAD UTILITY,
                UTILID = CICSRS4.CICSRS4L NOT EXECUTING,
                CLEANUP COMPLETE
DSN9022I  -D7Q2 DSNUGCCC '-TERM UTIL' NORMAL COMPLETION
***
```

Figure 19-49 Output of the TERMINATE command

The utility was terminated, so we could drop the DB2 objects. Still in the DB2I application, we entered SPUFI and executed the following commands:

```
DROP TABLE CPA13.DB2ALL;
DROP TABLESPACE  CPA13.DB2ALL;
DROP DATABASE CPA13;
```

Then we returned to the Export HDB screen (Figure 19-44 on page 445) and changed the primary allocation value for the tablespace to 50000 and the secondary value to 5000. We re-ran the DDL job to create the DB2 table and the load job for the DB2 table. This time, both jobs ran without problems. Figure 19-50 shows the last DB2 messages of the load job output. The output shows that the table was loaded with 59956 records, which is the sum of the number of records in the two data containers.

```
DSNU320I  -D7Q2 DSNURWI - RESUME(YES) WAS SPECIFIED FOR EMPTY TABLESPACE
DSNU304I  -D7Q2 DSNURWT - (RE)LOAD PHASE STATISTICS - NUMBER OF RECORDS=59956 FOR TABLE CPA13.DB2ALL
DSNU302I    DSNURILD - (RE)LOAD PHASE STATISTICS - NUMBER OF INPUT RECORDS PROCESSED=59956
DSNU300I    DSNURILD - (RE)LOAD PHASE COMPLETE, ELAPSED TIME=00:01:46
DSNU042I    DSNUGSOR - SORT PHASE STATISTICS -
                       NUMBER OF RECORDS=59956
                       ELAPSED TIME=00:00:01
DSNU349I  -D7Q2 DSNURBXA - BUILD PHASE STATISTICS - NUMBER OF KEYS=59956 FOR INDEX CPA13.DB2ALL_IX
DSNU258I    DSNURBXD - BUILD PHASE STATISTICS - NUMBER OF INDEXES=1
DSNU259I    DSNURBXD - BUILD PHASE COMPLETE, ELAPSED TIME=00:00:10
DSNU010I    DSNUGBAC - UTILITY EXECUTION COMPLETE, HIGHEST RETURN CODE=4
```

Figure 19-50 Load job output messages

We again entered SPUFI and executed a SELECT on SYSIBM.SYSTABLES to look for the characteristics of our table. The output in Figure 19-51 shows that our table has 334 columns.

```
SELECT * FROM SYSIBM.SYSTABLES WHERE NAME='DB2ALL'
---------+---------+---------+---------+---------+---------+---------+---------+-
NAME                CREATOR   TYPE  DBNAME    TSNAME      DBID    OBID  COLCOUNT
---------+---------+---------+---------+---------+---------+---------+---------+-
DB2ALL              CPA13     T     CPA13     DB2ALL       269       3       334
```

Figure 19-51 DB2ALL table information

To look at the contents of our table, we ran a SELECT * SQL statement. Figure 19-52 shows this SQL statement as well as the first screen of output.

```
SELECT * FROM CPA13.DB2ALL
---------+---------+---------+---------+---------+---------+---------+---------+---------+---------+---------+--
START                     MVSID  APPLID    TRAN  USERID    PROGRAM        TASKNO            RESPONSE_TIME            DISPATCH_TIME
---------+---------+---------+---------+---------+---------+---------+---------+---------+---------+---------+--
2003-10-06-18.54.39.804789  SC66   SCSCPJA7  DB2U  CICSUSER  PROGDB2U        21779  +0.2539000000000000E-01  +0.1878400000000000E-01
2003-10-06-18.54.39.813802  SC66   SCSCPJA7  DB2R  CICSUSER  PROGDB2R        21782  +0.1670200000000000E-01  +0.1435200000000000E-01
2003-10-06-18.54.39.816094  SC66   SCSCPJA7  DB2R  CICSUSER  PROGDB2R        21784  +0.1597000000000000E-01  +0.1467200000000000E-01
2003-10-06-18.54.39.816128  SC66   SCSCPJA7  DB2U  CICSUSER  PROGDB2U        21785  +0.1622000000000000E-01  +0.1462400000000000E-01
2003-10-06-18.54.39.848980  SC66   SCSCPJA7  DB2U  CICSUSER  PROGDB2U        21787  +0.8840000000000000E-03  +0.4639999999999999E-03
2003-10-06-18.54.39.849064  SC66   SCSCPJA7  DB2U  CICSUSER  PROGDB2U        21789  +0.2284000000000000E-02  +0.1120000000000000E-02
2003-10-06-18.54.39.851756  SC66   SCSCPJA7  DB2U  CICSUSER  PROGDB2U        21791  +0.1080000000000000E-02  +0.1024000000000000E-02
2003-10-06-18.54.39.851808  SC66   SCSCPJA7  DB2U  CICSUSER  PROGDB2U        21793  +0.1747000000000000E-02  +0.4800000000000000E-03
2003-10-06-18.54.39.848959  SC66   SCSCPJA7  DB2N  CICSUSER  PROGDB2N        21786  +0.1342500000000000E-01  +0.9823999999999999E-02
2003-10-06-18.54.39.849042  SC66   SCSCPJA7  DB2U  CICSUSER  PROGDB2U        21788  +0.1380700000000000E-01  +0.1161600000000000E-01
2003-10-06-18.54.39.849108  SC66   SCSCPJA7  DB2U  CICSUSER  PROGDB2U        21790  +0.1463900000000000E-01  +0.1073600000000000E-01
2003-10-06-18.54.39.851784  SC66   SCSCPJA7  DB2R  CICSUSER  PROGDB2R        21792  +0.1306900000000000E-01  +0.1099200000000000E-01
```

Figure 19-52 SQL SELECT command output

To have a decimal representation instead of a floating-point representation of the time fields, as an example, we selected specific fields and asked for a decimal representation. For such fields, we also re-specified the column name. Example 19-9 demonstrates how we did this.

Example 19-9 Table content with decimal number representation

```
SELECT TRAN,
       TASKNO,
       DEC(RESPONSE_TIME,8,4) AS RESPONSE_TIME,
       DEC(DISPATCH_TIME,8,4) AS DISPATCH_TIME,
       DISPATCH_COUNT,
       DEC(CPU_TIME,8,4)      AS CPU_TIME
    FROM CPA13.DB2ALL
    WHERE TRAN LIKE ('DB2_')
    ORDER BY RESPONSE_TIME DESC
---------+---------+---------+---------+---------+---------+---------+------
TRAN       TASKNO  RESPONSE_TIME  DISPATCH_TIME  DISPATCH_COUNT    CPU_TIME
---------+---------+---------+---------+---------+---------+---------+------
DB2N        39974          .6276          .5533              38       .0034
DB2R        39972          .5887          .5533               7       .0027
DB2U        39970          .5885          .5411               7       .0014
DB2U        39969          .5877          .5507               6       .0019
DB2U        39968          .5873          .5499               6       .0017
DB2U        39966          .5583          .5509               5       .0018
DB2V        39965          .5581          .4989               6       .0017
DB2N        39962          .5521          .4644              37       .0035
DB2N        71697          .5508          .0440              37       .0035
DB2N        71698          .5481          .4010              37       .0036
```

19.5 Conclusion

This chapter showed how you can use the Historical Database. The creation, loading, and reporting from a summary HDB was demonstrated by going through an error scenario. The way the data is accumulated in an HDB allows for an easy way to detect eventual changes in the performance of your transactions or complete CICS system.

We used a list HDB to show the export function in more detail. The export function provides a flexible way to load selected CICS performance data into a DB2 table.

We also showed the easy-to-use maintenance and housekeeping functions of the Historical Database Manager.

Abbreviations and acronyms

ACB	access control block
ACID	atomicity, consistency, isolation, durability
AID	automatic initiate descriptor
AOR	application owning region
APAR	authorized program analysis report
API	application programming interface
APPC	advanced program-to-program communication
ARM	automatic restart manager
ASCII	American Standard Code for Information Interchange
ATI	automatic transaction initiation
BMS	basic mapping support
BTS	business transaction services
CAS	coordinating address space
CF	coupling facility
CICS	Customer Information Control System
CICS PA	CICS Performance Analyzer for OS/390
CICS TS	Customer Information Control System Transaction server
CMAS	CICSPlex System Manager address space
CMF	CICS Monitoring Facility
CORBA	Common Object Request Broker Architecture
CSA	common system area
CSD	CICS system definition
CTG	CICS Transaction Gateway
CUA	Common User Access
CWA	common work area
CWS	CICS Web Support
DASD	direct access storage device
DBCTL	database control
DCT	destination control table
DPL	distributed program link
DSA	dynamic storage area
EBCIDIC	Extended Binary Coded Decimal Interchange Code
ECB	event control block
ECI	external call interface
EDSA	extended dynamic storage area
EIB	EXEC interface block
EIP	EXEC interface program
EJB	Enterprise JavaBean
ELPA	extended link pack area
EMP	event monitoring point
EPI	external presentation interface
ESDS	entry sequenced data set
ESM	external security manager
EXCI	external CICS interface
FEPI	front-end programming interface
FOR	file owning region
GLUE	global user exit
GMT	Greenwich Mean Time
GTF	Generalized Trace Facility
GUI	graphical user interface
HDB	Historical Database
HFS	hierarchical file system
HLL	high level language
HTML	Hypertext Markup Language
HTTP	hypertext transfer protocol
IBM	International Business Machines
ICF	Integrated Catalog Facility
IDE	integrated development environment
IIOP	Internet Inter-ORB Protocol
IMS	Information Management System
IPCS	Interactive Program Control System
IPL	initial program load
IRC	interregion communication
ISC	intersystem communication
ISPF	Interactive System Productivity Facility
ISV	Independent Software Vendor
IT	information technology
ITSO	International Technical Support Organization
J2EE	Java 2 Platform, Enterprise Edition
JCL	job control language
JCT	journal control table
JDK	Java Development Kit

JNI	Java native interface
JVM	Java Virtual Machine
KSDS	key sequenced data set
LE	Language Environment
LPA	link pack area
LPAR	logical partition
LSR	local shared resources
LU	logical unit
LUW	logical unit of work
MAS	managed address space
MCT	monitoring control table
MRO	multiregion operation
MVS	multiple virtual storage
OLTP	online transaction processing
ORB	Object Request Broker
OTE	Open Transaction Environment
PDS	partitioned data set
PDSE	partitioned data set extended
PLT	program list table
PLTPI	program list table post initialization
PLTSD	program list table shutdown
PTF	program temporary fix
RACF®	Resource Access Control Facility
RDO	resource definition online
RLS	record level sharing
RMF	Resource Management Facility
RRDS	relative record data set
SIT	system initialization table
SMF	system management facility
SMS	storage management subsystem
SNA	Systems Network Architecture
SOS	short on storage
SQL	Structured Query Language
SSL	Secure Sockets Layer
SVC	supervisor call
TCB	task control block
TCP/IP	Transmission Control Protocol/Internet Protocol
TCT	terminal control table
TCTTE	terminal control table terminal entry
TCTUA	terminal control table user area
TD	transient data
TIOA	terminal input output area
TOR	terminal owning region
TPNS	Teleprocessing Network Simulator
TRUE	task related user exit
TS	temporary storage
TWA	transaction work area
UOW	unit of work
URL	Uniform Resource Locator
URM	user replaceable module
VSAM	Virtual Storage Access Method
VTAM	Virtual Telecommunications Access Method
WLM	workload management
WUI	Web User Interface
XML	Extensible Markup Language
XPI	exit programming interface

Related publications

The publications listed in this section are considered particularly suitable for a more detailed discussion of the topics covered in this IBM Redbooks publication.

IBM Redbooks

For information about ordering these publications, see “How to get IBM Redbooks” on page 456. Note that some of the documents referenced here may be available in softcopy only.

- *Accounting and Chargeback with Tivoli Decision Support for OS/390*, SG24-6044
- *CICS Transaction Gateway V5: The WebSphere Connector for CICS*, SG24-6133
- *Enterprise JavaBeans for z/OS and OS/390 CICS Transaction Server V2.2*, SG24-6284
- *DB2 for z/OS and OS/390 Tools and Performance Management*, SG24-6508
- *DB2 Table Editor Tool Version 4.2*, SG24-6833

Other publications

These publications are also relevant as further information sources:

- *OS/390 V2R10.0 MVS Workload Management Services*, GC28-1773
- *OS/390 V2R10.0 MVS System Management Facilities (SMF)*, GC28-1783
- *CICS Transaction Server for z/OS Release Guide*, GC34-5983
- *CICS Transaction Server for z/OS Migration Guide*, GC34-5984
- *z/OS V1R4.0 MVS System Management Facilities (SMF)*, SA22-7630
- *DB2 UDB for OS/390 and z/OS Administration Guide*, SC26-9931
- *OS/390 Resource Management Facility User’s Guide*, SC28-1949
- *OS/390 Resource Management Facility Report Analysis*, SC28-1950
- *OS/390 Resource Management Facility Performance Management Guide*, SC33-1951
- *z/OS Resource Management Facility User’s Guide*, SC33-7990
- *z/OS Resource Management Facility Report Analysis*, SC33-7991
- *z/OS Resource Management Facility Performance Management Guide*, SC33-7992
- *CICS Transaction Server for z/OS CICS System Definition Guide*, SC34-5988
- *CICS Transaction Server for z/OS CICS Customization Guide*, SC34-5989
- *CICS Transaction Server for z/OS CICS Resource Definition Guide*, SC34-5990
- *CICS Transaction Server for z/OS CICS Operations and Utilities Guide*, SC34-5991
- *CICS Transaction Server for z/OS CICS Supplied Transactions*, SC34-5992
- *CICS Transaction Server for z/OS CICS Application Programming Guide*, SC34-5993
- *CICS Transaction Server for z/OS CICS Application Programming Reference*, SC34-5994
- *CICS Transaction Server for z/OS CICS System Programming Reference*, SC34-5995

- *CICS Transaction Server for z/OS Java Applications in CICS*, SC34-6000
- *CICS Transaction Server for z/OS Performance Guide*, SC34-6009
- *CICS Transaction Server for z/OS CICS DB2 Guide*, SC34-6014
- *WebSphere MQ for z/OS System Setup Guide*, SC34-6052
- *CICS Performance Analyzer for z/OS User's Guide*, SC34-6307
- *CICS Performance Analyzer for z/OS Report Reference*, SC34-6308

Online resources

These Web sites and URLs are also relevant as further information sources:

- CICS TS V2.2 online library

  http://www.software.ibm.com/ts/cics/library/cicstsforzos22.html
- CICS Performance Analyzer online Library

  http://www.software.ibm.com/ts/cics/library/cicspa.html/#books
- Fundi Software

  http://www.fundi.com.au

How to get IBM Redbooks

You can search for, view, or download Redbooks, Redpapers, Hints and Tips, draft publications and Additional materials, as well as order hardcopy Redbooks or CD-ROMs, at this Web site:

ibm.com/redbooks

Help from IBM

IBM Support and downloads

ibm.com/support

IBM Global Services

ibm.com/services

Index

Numerics

A

B

C

D

E

F

G

H

I

N

O

P

Q

R

S

T

U

V

W

X

Z

Redbooks

CICS Performance Analyzer

(1.0” spine)
0.875”<->1.498”
460 <-> 788 pages

CICS Performance Analyzer

Gain insight to the IBM WebSphere MQ reporting capabilities

Explore enhanced CICS Monitoring Facility (CMF) resource class reporting

Learn how to work with historical performance data

This IBM Redbooks publication targets CICS Transaction Server V1.3 and V2.2 customers who plan to implement IBM CICS Performance Analyzer. With this tool, you can produce a wide range of reports and extracts to help you tune and manage CICS systems.

The first part of this book begins with an overview of CICS-provided tools and utilities that help you gather and analyze performance data. It introduces the CICS Performance Analyzer product and its various report generating options. It also shows you how to import the extracted performance data into spreadsheets for further analysis.

The second part of this book takes you through a series of scenarios that cover major CICS components and interfaces. These include CICS-VSAM interface, CICS-DB2 Attachment Facility, CICS use of the MVS System Logger, Java applications in CICS, and others. For each scenario, you see how you can extract the relevant performance data using CICS Performance Analyzer. You can then use this data to improve the overall system performance or to compare different execution options at run time.

This Redbooks publication explores the new functionality of CICS PA Release 1.3, including IBM WebSphere MQ and how CICS PA now handles System Management Facility (SMF) 116 records. It looks at the new CICS Monitoring Facility (CMF) reports such as the Wait Analysis and Temporary Storage Usage reports. It aslo explains the Historical Database (HDB) facility for maintaining a history of CMF performance data for longer term reporting or exporting to DB2.

SG24-6063-00 ISBN 0738499013

INTERNATIONAL TECHNICAL SUPPORT ORGANIZATION

BUILDING TECHNICAL INFORMATION BASED ON PRACTICAL EXPERIENCE

IBM Redbooks are developed by the IBM International Technical Support Organization. Experts from IBM, Customers and Partners from around the world create timely technical information based on realistic scenarios. Specific recommendations are provided to help you implement IT solutions more effectively in your environment.

For more information:
ibm.com/redbooks